GTR

NISSEI CORPORATION

Gearmotors General Catalog

Gearmotors

General Catalog

CONTENTS

Introduction

P.0002 **Gearmotor Concept**
P.0004 **Properties of Gearmotors by Type**
P.0006 **Introduction of Options**
P.0008 **High Precision Gearboxes for Servo Motors**
P.0014 **Battery Powered Gearmotors**
P.0020 **Product Lineup/Index**
P.0024 **High Stiffness Reducer UXiMO**
P.0026 **How to Select a Gearmotor**
P.0027 **Introduction to Our Website**
P.0028 **Company Overview**

Product

P.0030 **INDUCTION GEARMOTORS**
- P.0031 G/G3/GA Type Parallel Shaft
- P.0217 H/H2 Type Right Angle Shaft
- P.0331 F/FA Type Right Angle Hollow Bore/Right Angle Shaft
- P.0419 F2/F3 Type Concentric Right Angle Hollow Bore/ Concentric Right Angle Shaft
- P.0517 Technical Documentation
- P.0645 Option

P.0658 **BATTERY POWERED GEARMOTORS**
- P.0659 VG/APG Type Parallel Shaft
- P.0675 VH Type/Right Angle Shaft
- P.0683 VF3S/VF3F Type Concentric Right Angle Hollow Bore/Concentric Right Angle Shaft F3S Type Right Angle Shaft
- P.0699 Control Unit Specification
- P.0735 Technical Documentation
- P.0747 Option

P.0752 **HIGH PRECISION GEARBOXES FOR SERVO MOTORS**
- P.0753 APG/AG3/AGA Type Parallel Shaft
- P.0801 AH2 Type Right Angle Shaft
- P.0811 AFC Type Right Angle Hollow Bore / Right Angle Shaft
- P.0845 AF3 Type Concentric Right Angle Hollow Bore / Concentric Right Angle Shaft
- P.0885 Technical Documentation
- P.0951 Option

P.0954 **BEVEL GEARBOXES**
- P.0955 Bevel Gearboxes
- P.0971 Technical Documentation

P.0978 **TECHNICAL DOCUMENTATION, OPTION, INDEX**

Precautions for Safety

General

- It is recommended to read the safety regulations concerning the installation location and the device to be used. (Ordinance on Industrial Safety and Health, Electrical Equipment Technical Standards, Interior Wiring Code, Factory Explosion Prevention Guidelines, Building Standards Act, etc.)
- Before using the product, carefully read through the Instruction Manual to familiarize yourself with installation process.

Selection

- Select the most appropriate product for your usage environment and application. (When selecting a product, be sure to carefully read the “Driver Specifications,” the “Technical Documentation,” and “Precautions for Use.”
- To use the product for personnel transportation equipment or lifting equipment, provide the equipment with a protective device for safety.
- Do not use the product in an explosive environment. Failure to follow this precaution may result in an explosion, fire, electric shock, injury, or damage to the equipment.
- Do not perform work in a live-wire state. Be sure to turn off the power before work. Failure to follow this precaution may result in an electric shock.
- Transportation, installation, piping, wiring, operation, handling, maintenance, and inspection must be conducted by personnel with expertise and skills. Failure to follow this precaution may result in an explosion, ignition of fire, fire, electric shock, injury, or damage to the equipment.
- For equipment particularly susceptible to oil vapor such as food processing machinery, provide an oil pan or use protective device in preparation for oil leaks due to a failure, end of life, etc.

● Note

The specifications of the products in this catalog are subject to change for improvement or other purposes without notice. So, please contact us before designing your equipment to confirm the specifications of our product.

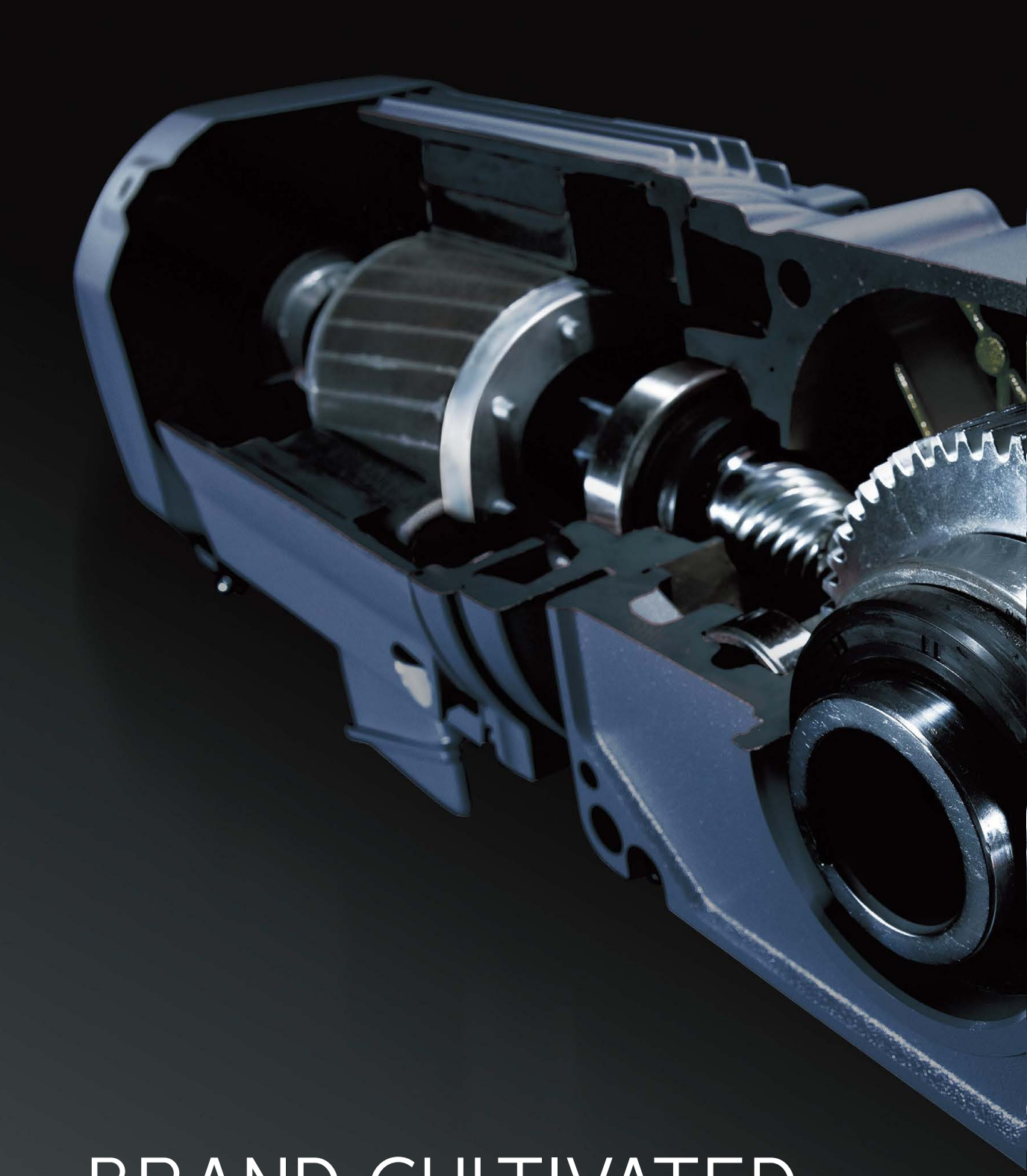

BRAND CULTIVATED IN TECHNOLOGY.

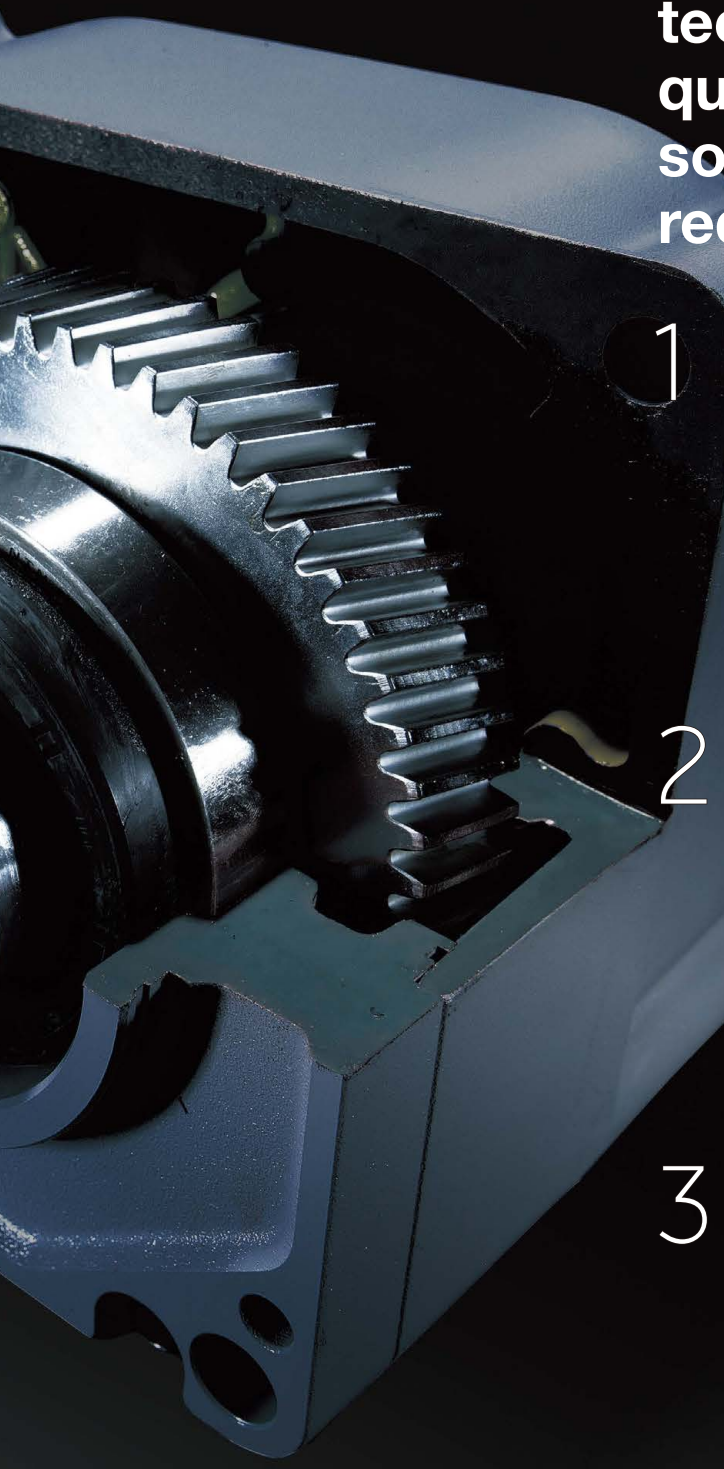

You can find technologies and quality that ensure solutions to diverse requirements.

1 Mastering Perfect Precision Gears

In 1955, we started the manufacture and sale of gears. All processes,from design to heat treatment,are performed by integrated production,and we own industry's top level equipment and capacity that can produce about 700,000 products a month. We are committed to develop and manufacture high precision gears, including gears of small diameters, small modules, and complicated shapes.

2 Integrated Production

At our plants, all items are manufactured from raw materials to finished products through integrated production under extremely strict control of environment such as constant temperature and low mist. Our Bevel Grinding machines meet the needs of customers in a wide range of industries as we produce them using high-performance equipment. We have the largest factory in Japan as an OEM gear manufacturer capable of in-house integrated production.

3 Fusion of advanced technology

Pioneer in Gear technology for more than half a century,also die-casting technology inherited from sewing machines, with our In-house motor manufacturing technology. Power transmission devices created through the fusion of these advanced technologies fulfill various needs with a wide variety of products having flexible specifications and designs tailored according to requests from customers.

Find the best gearmotor for your needs

We have 140,000 standard products, and except for some models, most of them are compatible with overseas standards, so it is safe to use a device with a gearmotor installed in overseas. Customization options available.

standard products 140,000 More than kinds

Wide variety of standard products meets the global standard

01 INDUCTION GEARMOTOR

- **Easy to use, like quick and simple start up just by connecting to the power supply.**
- **Different mounting types are available (Foot Mount, Foot Mount, Small Flange Mount).**

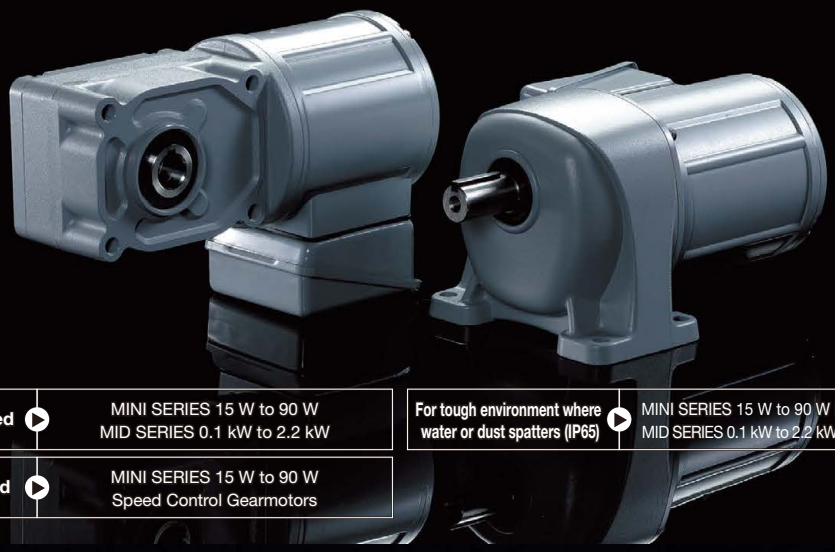

For constant speed	MINI SERIES 15 W to 90 W MID SERIES 0.1 kW to 2.2 kW
For variable speed	MINI SERIES 15 W to 90 W Speed Control Gearmotors
For tough environment where water or dust spatters (IP65)	MINI SERIES 15 W to 90 W IP65 Gearmotors MID SERIES 0.1 kW to 2.2 kW IP65 Gearmotors

02 HIGH PRECISION REDUSERS FOR SERVO MOTORS

- **Highly precise control is possible with a detector that measures the rotation speed, etc.**
- **Compatible with major servo motors in the Japanese domestic market as well as overseas.**

For a commercially available servo motor	APG/AFC100 W to 3000 W Classes (Compact High Precision Gearboxes) AG3/AGA/AH2/AF3 100 W to 2000 W Classes (High Precision Gearboxes)
For tough environment where water or dust spatters (IP65)	APG 100 W to 3000 W Classes (Compact High Precision Gearboxes)

Mounting dimensions that have remained unchanged since release

Since the mounting dimensions have not changed since the product was released, there is no need to modify the equipment drawings even after the renewal. In addition, it can be easily replaced even in the event of a failure, and can be installed in to a different categories such as induction gearmotor can be changed to battery powered gearmotor.

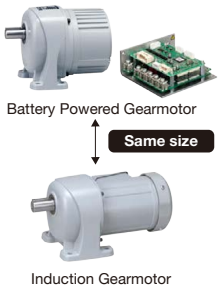

03 BATTERY POWERD GEARMOTOR

- **Battery powered, ideal for devices which are in motion.**
- **Easy to Install dedicated software.**

For a DC power supply	V SERIES 50 W to 0.4 kW 12 V·24 V·48 V SD SERIES 0.75 kW 48 V	**For variable speed**	V SERIES 50 W to 0.4 kW 12 V·24 V·48 V (Driver settings) SD SERIES 0.75 kW 48 V (Driver settings)

Wide range of custom options provide multiple functions and high performance on demand

WIDE RANGE OF OPTIONS

Options are designed to minimize additional design or assembly process as extensional function of standard geared motors. You can add functions as you like.

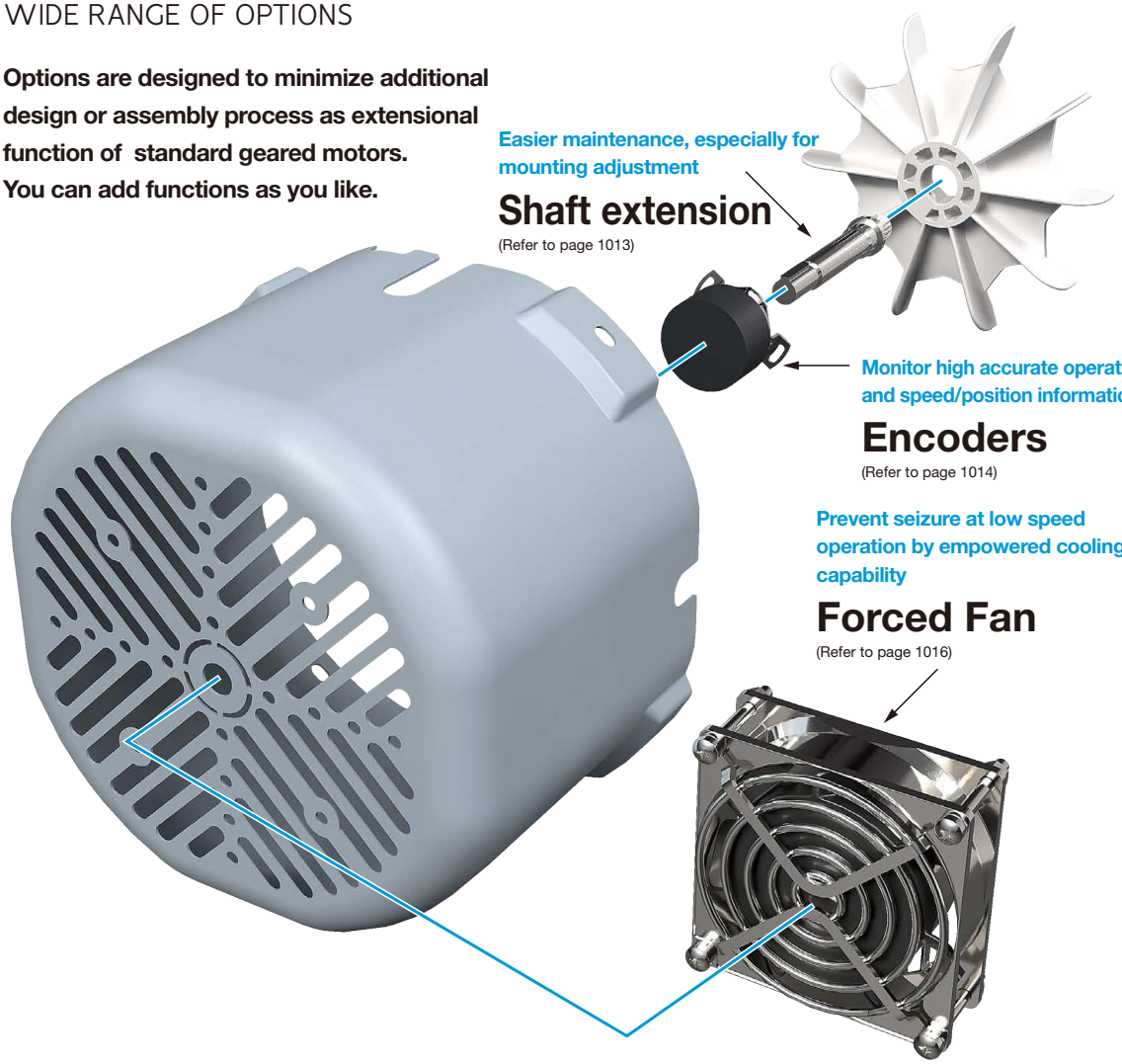

Custom Example -Shaft Extension-

You can add sensors or handles for motor stopping position adjustment or output shaft angle adjustment.

Custom Example -Encoder Mount-

You can do high-precision vector control combined with an inverter/VFD and monitor speed/position signal information.

Custom Example -Forced Fan-

You can suppress motor temperature rise at low speed on a inverter/VFD operation and prevent seizure and malfunction like stopping due to error detection.

Choose your best fit from wide range of options.

*Refer to each page for more details.

Rear part of motor	Page
• Motor Shaft Extension	1013
• With an encoder	1014
• With forced Fan	1016
• Add fan to 0.2kw motor	Contact us

Brake	Page
• Surge Suppressors for Brake Wiring	1011
• Add manual release lever	590
• Manual release lever position change	590
• 200V brake specification change	Contact us

Motor	Page
• Global Standards Conformance	593
• Special Voltage	Contact us
• Tropical treatment	

Nameplate	Page
• Nameplate position change	Contact us
• Nameplate printing protection	

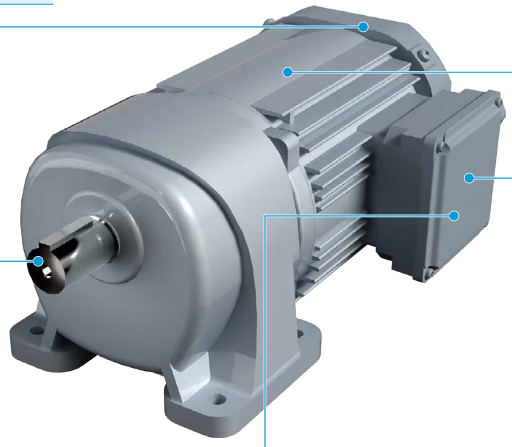

Output Shaft	Page
• Add tapped hole on the shaft end	1017
• Special tapped hole on output shaft	Contact us
• Output shaft material change	

Terminal box	Page
• With cable gland	1017
• Terminal box position change	582
• Terminal box hole position change	582

Rectifier and wiring	Page
• Brake wiring for built-in rectifier	561
• Separate rectifier	Contact us

Common	Page
• Stainless screws	Contact us
• Grease change (Food grade, high/low temperature)	
• Special coating	

Right Angle Hollow Bore/
Concentric Right Angle Hollow Bore

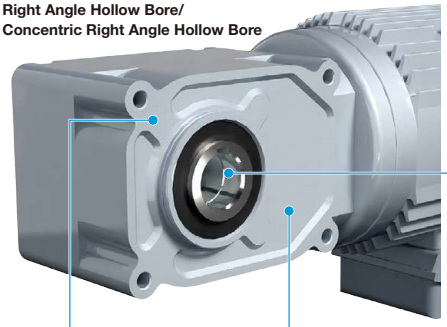

Gearbox (S-type)

Mounting options	Page
• Torque Arm	1006
• R Flange	1009
• B5 flange	Contact us

Output Shaft	Page
• Output shaft diameter change for hollow bore	Contact us

Gearbox	Page
• NEMA flange gearbox (S-type)	Contact us
• B14 flange with tapped hole	
• Without resin cover	

Selection Item. 01

High Precision Gearboxes for Servo Motors

Gearboxes that pursue the excellence in compact size and high precision. Meet variety of application demand by providing a wide range of products line-up.

Gearboxes that control motion with various kinds of servo motors. We have a wide range of gearboxes for servo motors with reduction ratios of 1/3 to 1/240 and compatible with major servo motors in the Japanese domestic market as well as overseas.

APG / AFC **Power: 100 W to 3000 W**

High Precision Gearboxes for Servo Motors that has accomplish compactness

The high precision gearbox APG type is compact and highly rigid due to the adoption of a planetary mechanism, which contributes to downsizing devices. Moreover, the AFC Type features compactness thanks to a specially designed gear case. The gearbox can be mounted perpendicularly to the device it saves space on the equipment.

AH2 / AF3 **Power: 100 W to 2000 W**

The gearhead has the same shape as the Induction Gearmotor

Since the induction gearmotor and gearhead are common, no extra design changes are required while changing specifications. In addition,the concentric hollow shaft/concentric right angle shaft (AF3) is available with backlash accuracy of 1 arc min and 3 arc min. Enables highly accurate positioning control.

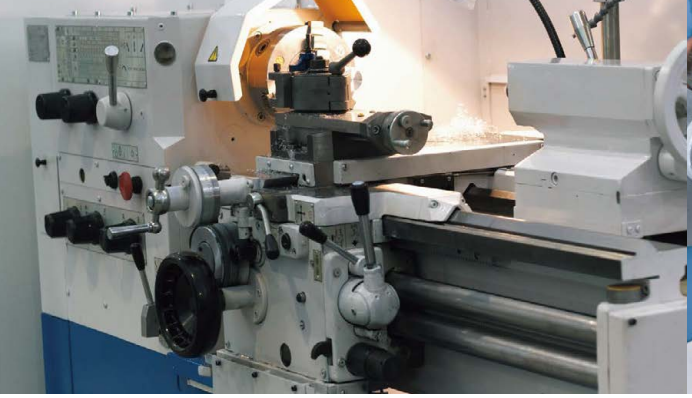

Compact design, Versatile gearboxes for many applications.

The right angle shaft type of the high precision gearbox can be mounted perpendicularly to the device, so that the motor does not protrude from the device, which results in space saving design of your device. Compared to gearboxes made by other companies,we have achieved formidable compactness.
Our gearboxes can help save installation space and are suitable for various applications, such as lifting/reversing machines, medical devices (mammography and x-ray equipment), rotary drive machines, grinders and reverse mechanisms.

FEATURE 01

Right angle shaft type is designed for space saving

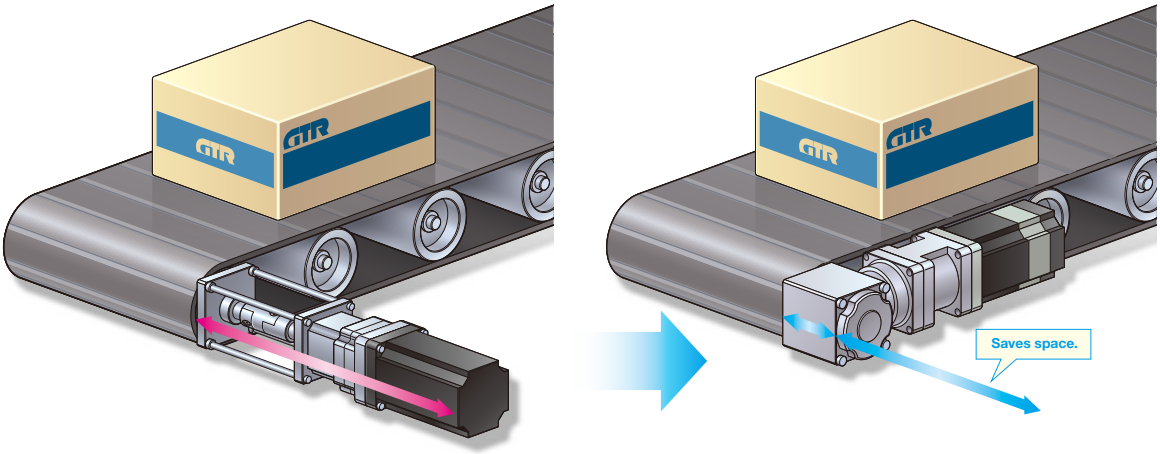

FEATURE 03

Can be installed in limited space for various applications

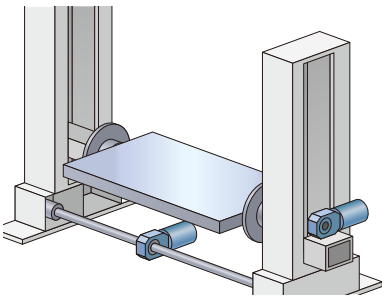

Lifting machine/Reverser

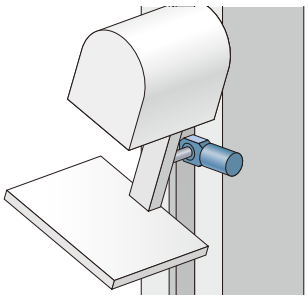

Medical equipment (mammography)

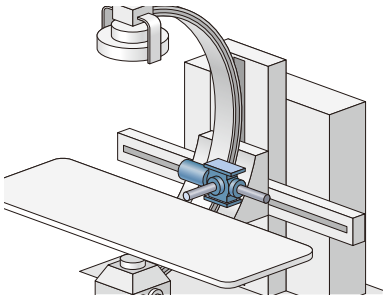

Medical equipment (radiography equipment)

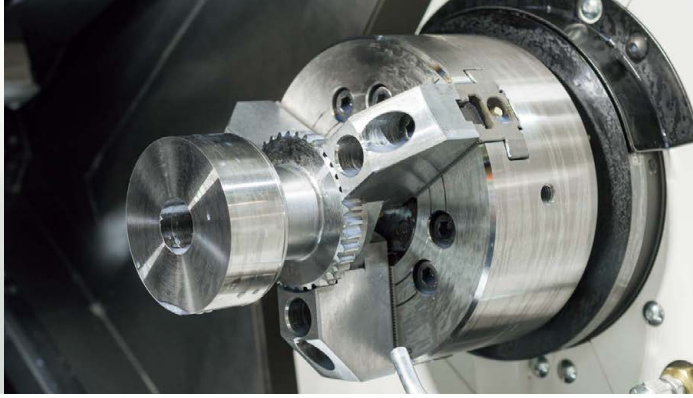

We propose the optimum gearbox using our selection tool.

Supports major servo motor manufacturers worldwide.
Select the optimum gearbox using the selection tool on our website.
In addition,we can mount our gearboxes on your pre-owned motors too, you just need to ship it to our factory so that we could ship you back an assembled unit.

https://sentei.nissei-gtr.co.jp/english/servomotor

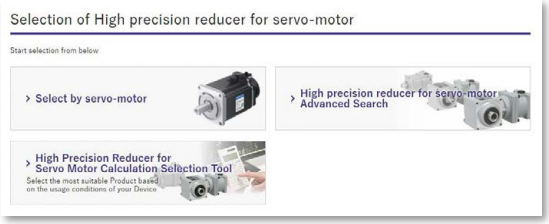

FEATURE

02 Shape in pursuit of compactness

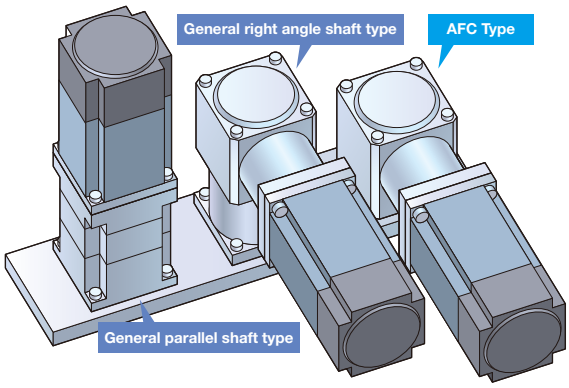

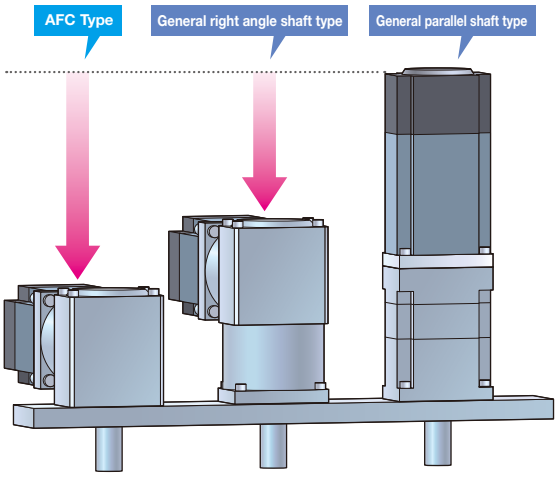

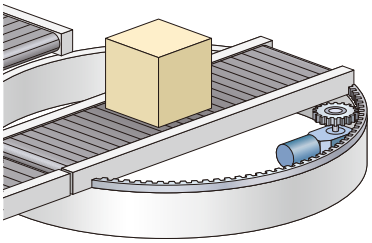

Rotary driver

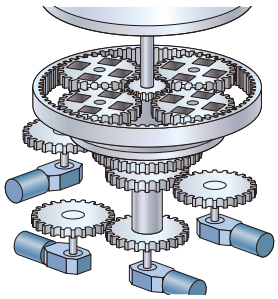

Grinder

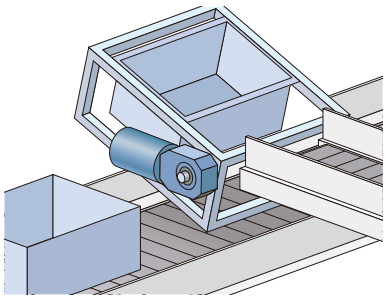

Reverse mechanism

APG Type Specification Upgrade

Catch up with evolution of servo motors Seeking Speed and Torque at the same time.

ACCURATE GEARBOX

The speed and performance of servo motors is improving year by year.
Servo Gearbox APG type has evolved to obtain full-performance of the servo motors.
This has achieved "High Speed", "High Torque", "High Efficiency", reaching a high-level of performance in the industry.
It contributes to takt improvement particularly in food packaging machines and other production equipment, make it possible to dramatically increase production output.

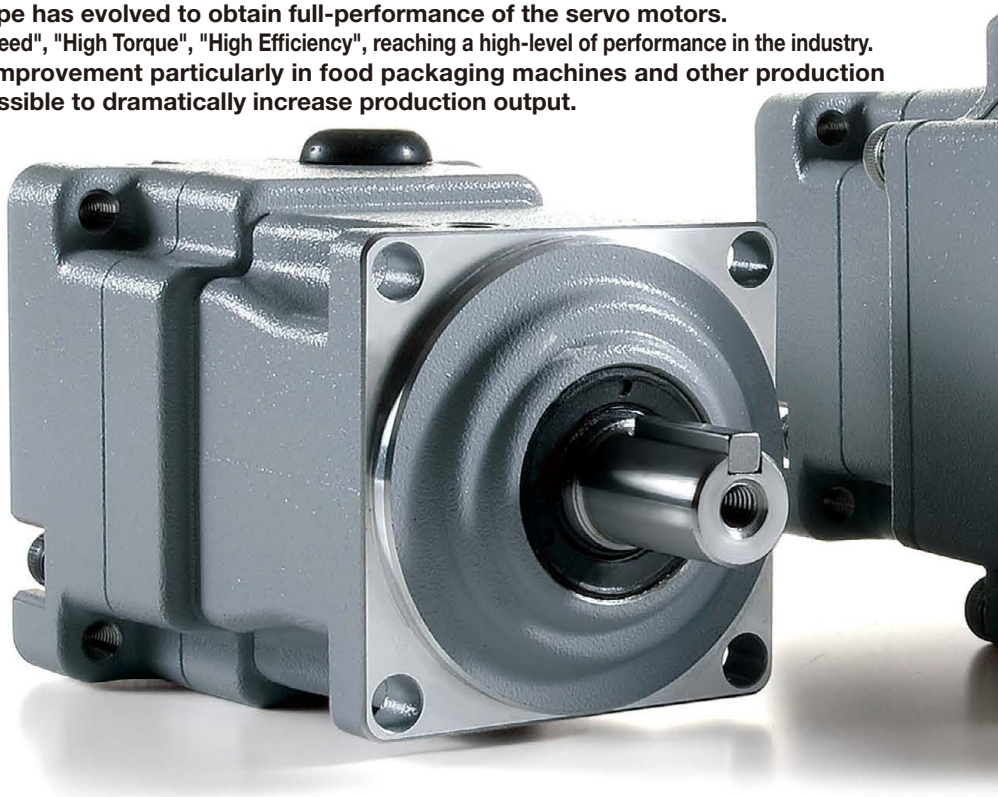

High speed

Allowable maximum rpm

7000r/min

Supporting instantaneous input rotational speed of 7,000 r/min contributes to speed increases and takt improvement.

Supporting high rotational speeds of 7,000 r/min significantly improves the driving speeds of equipment.
These upgrades enable operation at high rotational speeds that could not be supported previously.
The increase in equipment productivity leads to the expectation of more items produced per hour.

Full utilization of the power of the servo motor contributes to productivity improvement.

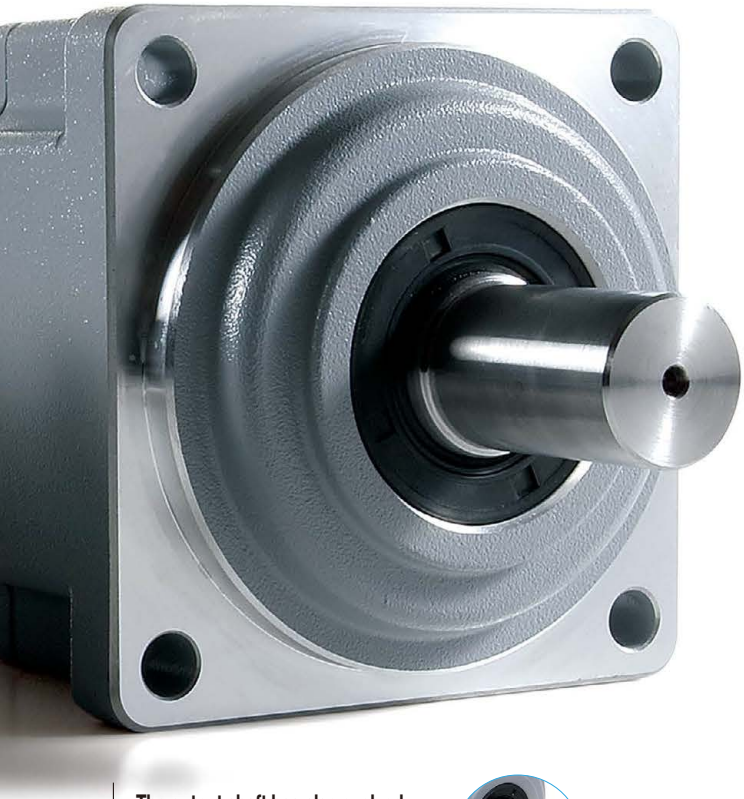

High torque

Allowable maximum rate

350%

Allowable peak torque of startup/stop, maximum up to 350% supported.

The peak torque at startup and stop is improved to a maximum of 350%. This increases the power of the equipment and expands the scope of machining, enabling the optimal selection for the application.

High efficiency

Maximum point increase

10point

Compared with our current models, transmission efficiency is increased by 4 points on average and 10 points at maximum.

The increased transmission efficiency reduces energy costs and contributes to keeping equipment compact and extending its lifespan. This simultaneously achieves environmental responsivity and increased performance, ideal for equipment that prioritizes efficiency.

The output shaft has also evolved through shape changes and additions.

We changed the standard specifications to include shaft end tapped hole and added the much-requested straight shaft to the standard lineup.

■ Shaft End Tap Sizes

Frame Size	Tap size
12	M5×12
18	M6×15
22	M8×20
28	M8×20

Current

Output shaft with key and no end tapped

Changes

Output shaft with key and end tapped

New

Straight shaft

Add applicable motor power

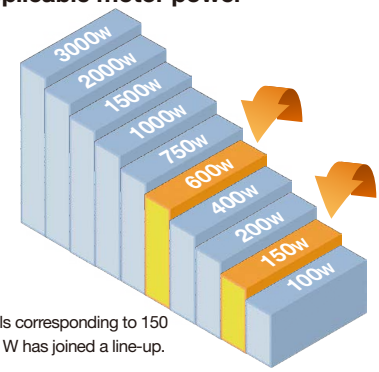

New models corresponding to 150 W and 600 W has joined a line-up.

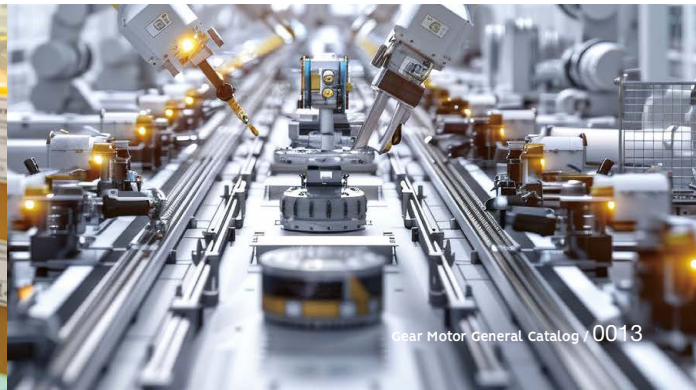

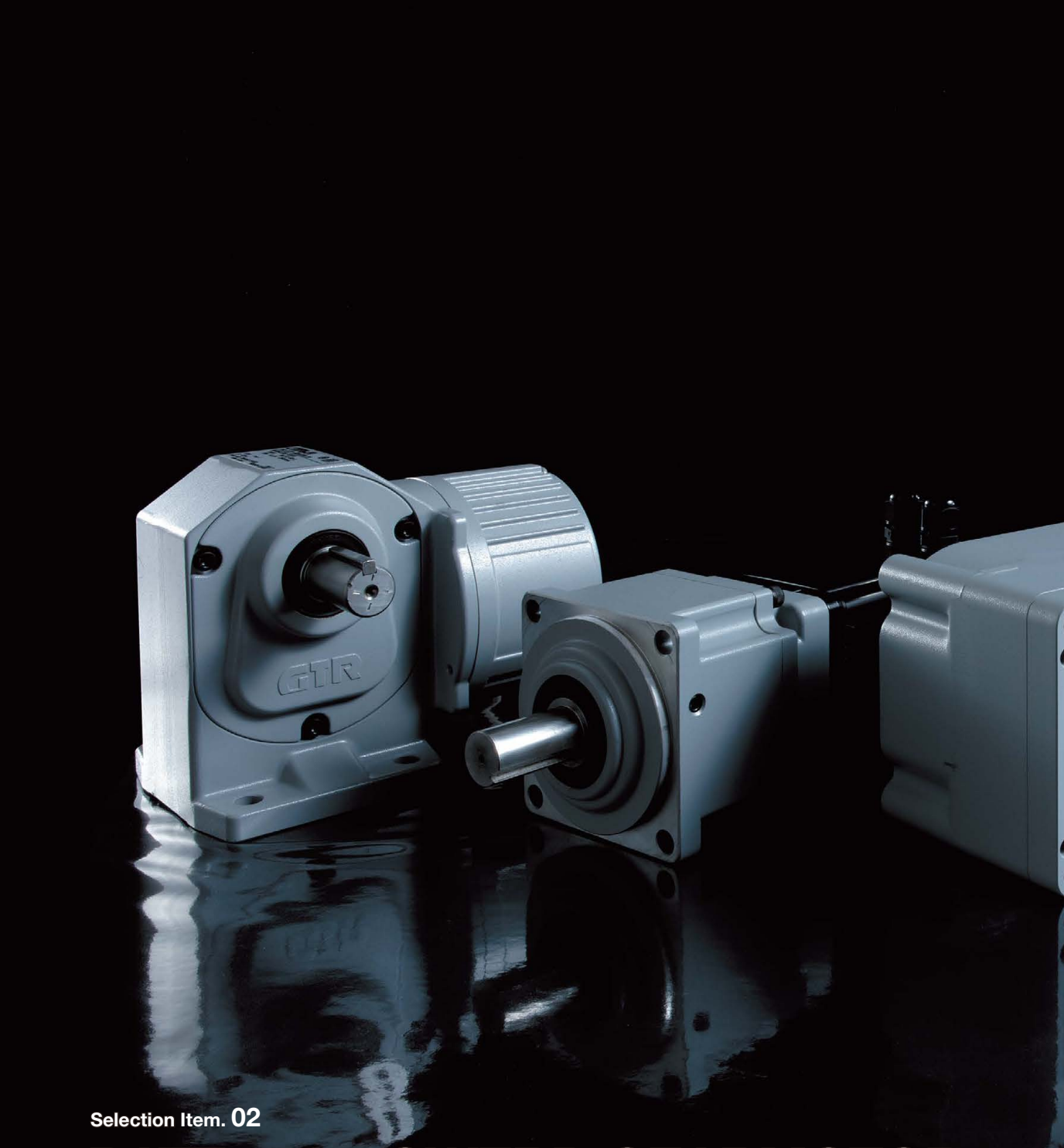

Selection Item. 02

BATTERY POWERD GEARMOTOR

Make AGV/AMR more easily and freely to use

**We have a range of battery powered gearmotors with compact designs,
a wide-ranging variation of reduction ratios, and various types of motion control enabled.
Please choose from among 1,800 models and use them in your AGV/AMR designs.**

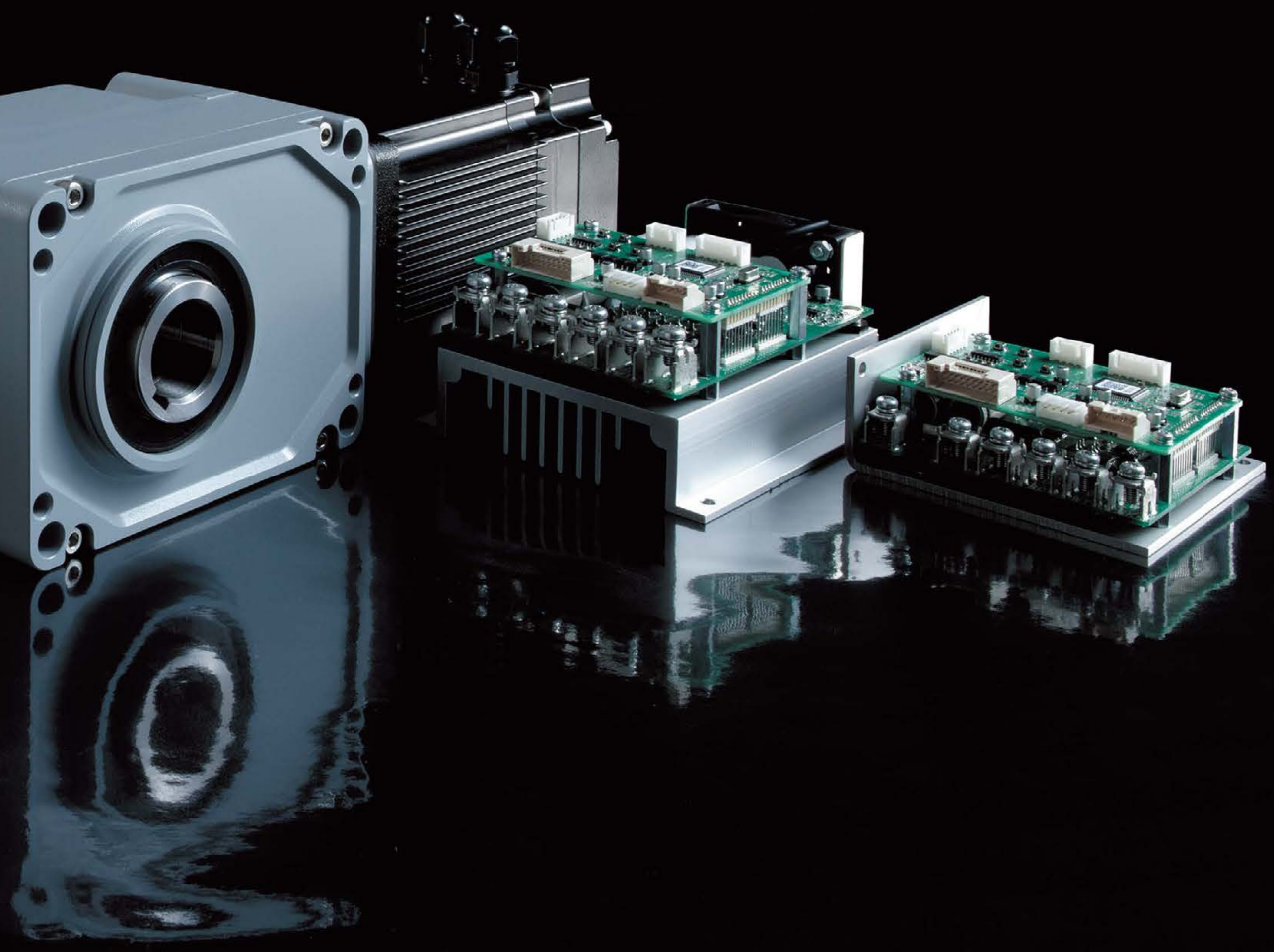

Compact and powerful, perfect for AGV/AMR.

This compact design is perfect fit for AGV/AMR which needs to be low-to-floor style. We have realized high power output of 0.75 kW at an input voltage of 48 VDC with the SD Series.

Outdoor specifications are available.

The outdoor specifications have an ingress protection rating of IP65. It can also be used for AGV/AMR to be operated outdoors or between buildings.

Also connectable with other companies' drives.

Perfect collaboration with our gearmotors and drivers made by other companies. We support AGV/AMR development and implementation by providing a wide range of driver options and technical support documents.

The Best Solutions for AGV/AMR Development

SD Series

V Series

We provide the optimal solution to AGV/AMR that requires high speed-stability and extensive control functions, through our products with high precision functions and performance such as SD series which is compact but produces high output, and V series which offers a wide range of selections.

Low-to-floor, space-saving, compact design.

These low-floor AGV take full advantage of their compact sizes. The left/right wheel two-motor design saves space and allows the AGV to turn when stopped, making advanced operation with tight turns possible.
It also runs at high 0.75 kW output at an input voltage of 48 VDC. F3 Type is both fast and powerful, even during low crawling transport.

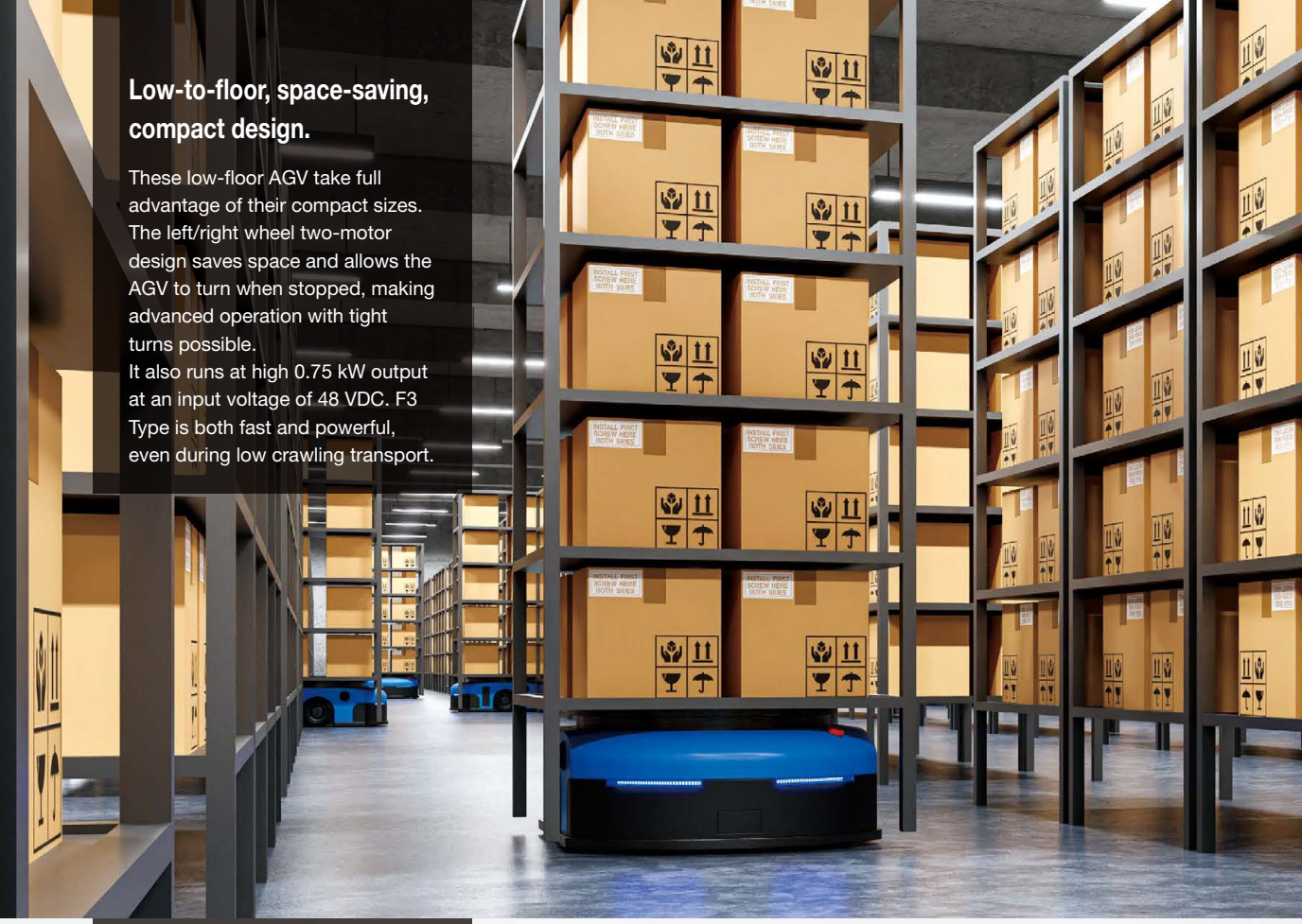

Waterproof, vibration resistant, ideal for outdoor advanced operation.

IP65 class waterproofing and 2G vibration resistance drastically improve AGV operation outdoors. This allows for stable operation on asphalt, over bumps, and on wet roads in the rain, for speedy transport even across spacious factory sites.

Perfect collaboration with our gearmotors and drivers made by other companies.

We have tested the combination of these companies' drivers and our gearmotors.
For a driver, please contact the distributors listed below, and for gearmotors, please contact NISSEI using the contact on the back cover of this pamphlet.
We also provide technical support documents with regard to specifications in operation and precautions for combined operation.

Battery Powers Gearmotor

×

Driver Tie-Up

Collaboration with Driver Manufacturers

Through tie-ups with driver manufacturers and distributors, we provide the best driver options and technical support documents for various applications.

ADVANCED MOTION CONTROLS

Driver manufacturers
Advanced Motion Controls

Combination confirmed models
DigiFlex® Performance™ (PCB Mount)*1

Communication function
CANopen / EtherCAT / Modbus, etc.

Properties
- Driver specialist manufacturer (California, U.S.A.)
- More than 3 million units sold worldwide
- Equipped with torque (voltage), speed, and position control modes
- Spatial vector control with encoder feedback.
- Equipped with functional safety STO (SIL3). TÜV certified models available.
- UL/cUL, CE Class A (LVD/EMC), RoHS compliance
- Environmental resistance (MIL-STD-810 compliance), customization available, etc.

RoboteQ a Nidec Brand

Driver manufacturers
Roboteq

Combination confirmed models
SBL Family / FBL Family*1

Communication function
CANopen / EtherCAT*2 / Modbus, etc.

Properties
- 2 motors can be driven - Cover included
- ROS support - Can be driven by encoder feedback
- Equipped with functional safety STO (ISO 13849-1 2015 Category 3 compliant)
- Can be optimized using magnetic sensors*2 in magnetic induction type AGV
- Software customization available, etc.

Note 1: Combination with most of our gearmotors has been tested. Please contact us for details.
Note 2: Optional support available.

A wide variety of mounting and reduction ratios meet diverse needs.

Gear motor 1800 model

Approx. 1,800 gearmotor models, a wide variety of combinations are available.

For any gearmotor of 0.1 kW and above, parallel shafts, right angle shafts, concentric right angle hollow bores/concentric right angle shafts can be selected for the same capacity and reduction ratio.

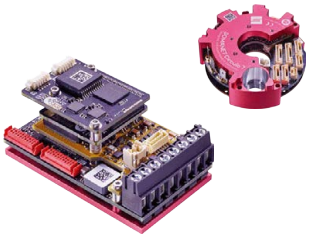

synapticon

Driver manufacturers
Synapticon

Combination confirmed models
SOMANET Node / SOMANET Node Safety*1

Communication function
EtherCAT

Properties
- High safety compliant driver (SIL 3, PLe, Category 3, others)
- Unique performance that boasts high current density and minimizes heat generation
- Node (ultra-compact), Circulo (hollow), Integro (lineup of wire-saving and space-saving types)
- The encoder supports BiSS-C/SSI/ABI/Nikon A-Format/Hall sensors, etc.

Fancy Creativity 佳 创 博 为

Driver manufacturers
Fancy Creativity

Combination confirmed models
FancyDRV-BLDC 24-2X200-V2 /
FancyDRV-BLDC 48-2X400-S2

Communication function
CANopen / Modbus

Properties
- 2 motors can be driven
- Cover included
- Good cost performance
- Simple configuration, etc

nissei

Driver manufacturers
nissei

Combination confirmed models
A-BLCD***L* /
A-SDNB080L4 (nissei only driver)

Communication function
–

Properties
- NISSEI original driver (Compatible with all models, can be used immediately after purchase, extension cable option available)
- Full range of I/O functions (DC lock, movement detection by rotation pulse)
- Full range of speed command methods (analog and digital settings possible)
- No heat sink required

LINEUP/INDEX

Induction Gearmotor P.30

G/G3/GA Type Parallel Shaft

1. Gearmotors/Gearmotors with Brake P.68
2. IP65 Gearmotors/IP65 Gearmotors with Brake P.133
3. Gearmotors with Clutch/Brake P.162
4. Speed Control Gearmotors P.172
5. Gearboxes (Double Shaft Type) P.188
6. S-Type Gearboxes (Type which Can be Equipped with Designated Motor) P.200

P.217

H/H2 Type Right Angle Shaft

1. Gearmotors/Gearmotors with Brake P.242
2. IP65 Gearmotors/IP65 Gearmotors with Brake P.276
3. Gearmotors with Clutch/Brake P.294
4. Speed Control Gearmotors P.300
5. Gearboxes (Double Shaft Type) P.314
6. S-Type Gearboxes (Type which Can be Equipped with Designated Motor) P.322

P.331

F/FA Type Right Angle Hollow Bore/ Right Angle Shaft

1. Gearmotors/Gearmotors with Brake P.360
2. IP65 Gearmotors/IP65 Gearmotors with Brake P.390
3. Gearboxes (Double Shaft Type) P.404
4. S-Type Gearboxes (Type which Can be Equipped with Designated Motor) P.412

P.419

F2/F3 Type Concentric Right Angle Hollow Bore/Concentric Right Angle Shaft

1. Gearmotors/Gearmotors with Brake P.444
2. IP65 Gearmotors/IP65 Gearmotors with Brake P.480
3. Speed Control Gearmotors P.494
4. Gearboxes (Double Shaft Type) P.504
5. S-Type Gearboxes (Type which Can be Equipped with Designated Motor) P.510

Technical Documentation P.517

Option P.645

Battery Powered Gearmotors P.658

VG/APG Type Parallel Shaft

1. Battery powered Gearmotors P.664

P.675

VH Type/Right Angle Shaft

1. Battery powered Gearmotors P.678

P.683

VF3S/VF3F Type Concentric Right Angle Hollow Bore/Concentric Right Angle Shaft
F3S Type/Right Angle Shaft Flange Mount on Both Sides

1. Battery powered Gearmotors P.688

Control Unit Specifications P.699

Technical Documentation P.735

Option P.747

LINEUP/INDEX

High Precision Gearboxes for Servo Motors P.752

APG/AG3/AGA Type Parallel Shaft

1. Compact High Precision Gearboxes for Servo Motors P.760
2. Low backlash High Precision Gearboxes for Servo Motors P.784

P.801

AH2 Type Right Angle Shaft

1. Low backlash High Precision Gearboxes for Servo Motors P.804

P.811

AFC Type Right Angle Hollow Bore/ Right Angle Shaft

1. Compact High Precision Gearboxes for Servo Motors P.816

P.845

AF3 Type Concentric Right Angle Hollow Bore/Concentric Right Angle Shaft

1. High Precision Gearboxes for Servo Motors Backlash 1 arc min/3 arc min Specifications P.852
2. Low Backlash High Precision Gearboxes for Servo Motors P.866

Technical Documentation P.885

Option P.951

Bevel Gearbox P.954

1. Bevel Gearboxes <K Type> P.960
2. Bevel Gearboxes <KN Type> P.964

Technical Documentation P.971

Technical Documentation P.979

Option P.1005

Index P.1019

UXiMO

DGS / DGH / DGF type

Gear Head type

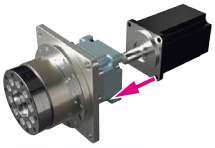

The Gear Head type can be easily coupled with the servo motors of any other companies!
Man-hour can be reduced.

In multiple ways,High accuracy drive.

The High Stiffness Reducer has functionality which can meet the needs for increased productivity as well provides efficiency from every angle.
For Fast and Powerful industrial robots or FA products.
Large hollow shaft enables great freedom in product design and composition.

We will provide greater performance than ever in various applications with High Stiffness Reducer.

■Please visit our website for details https://www.nissei-gtr.global/en/rc

HOW TO SELECT GEARMOTOR

You can select the most suitable gearmotor by using the selection tool on the website.

STEP 01

First select a device.

From among the devices to be installed that are classified by application, select one based on a device to be installed according to the application.

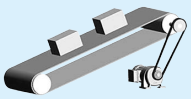
Chain (Belt) conveyor

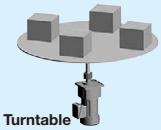
Turntable

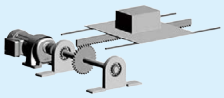
Rack & Pinion

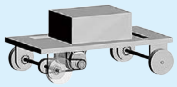
Cart

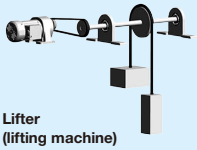
Lifter
(lifting machine)

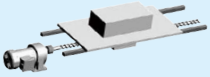
Screw feed

Reverse mechanism

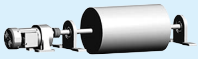
Rotating machine (cylindrical)

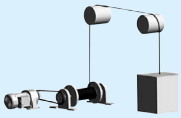
Hoist

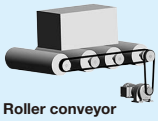
Roller conveyor

STEP 02

Select a gearmotor series to be used.

Since the functions and properties of each series are described in detail, please check them before selecting your appropriate model.

Induction Gearmotor
(MID Series/MINI Series)

Battery Powered Gearmotors
(12 V/24 V/48 VDC)

STEP 03

Select an output shaft type.

From among four types classified based on the directions of the output and motor shafts and the shape of the output shaft, select one suitable for the device to be installed.

Parallel shaft (G3, GA, G Types)

Right angle shaft (H2, H Types)

Right angle hollow bore
(FS, FAS, F2S, F3S Types)

Right angle shaft
(FF, F2F, F3F Types)

STEP 04

Select a connection mechanism between the gearmotor and the device.

Select from two types: type to be connected directly to the drive shaft and connection type.
If you desire to keep the installation space compact, we recommend a direct connection type.

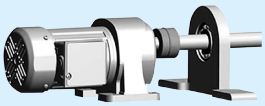
Directly connected to the drive shaft
(using a coupling etc.)

Directly connected to the drive shaft
(using a sprocket, gear, etc.)

STEP 05

Enter your requirement parameters and select a suitable product.

Refer to the selection procedure page for each device.

Use the selection tool on our website.

■ Selection of gearmotors

<Selection through website>
https://sentei.nissei-gtr.co.jp/english/calculation

<Send Request to technical customer service Representative>
https://sentei.nissei-gtr.co.jp/english/service.html

■ Selection of High Precision Gearboxes for Servo Motors

<Selection through website>
https://sentei.nissei-gtr.co.jp/english/servomotor

<Send Request to technical customer service Representative>
https://sentei.nissei-gtr.co.jp/english/servo_calculation/service.html

https://www.nissei-gtr.global/en/

If you have any questions or require more information, please visit our Corporation's website.

Main website

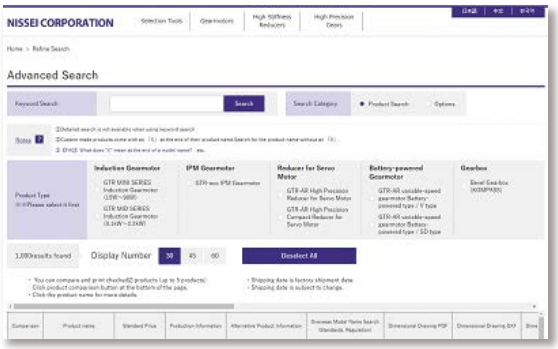

Refined search

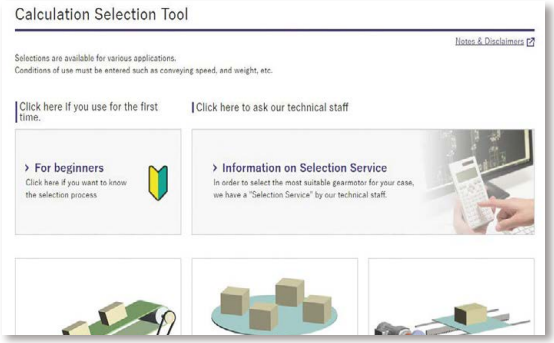

Calculation and selection tool

Standards	Specification	No standard
	Overseas Model	Convert to overseas models
Weight/Packaging	Approximate Weight	5 kg
	Packaging Specification	Cardboard 516 × 308 × 270
Product Data	Dimensional Drawings: PDF	2D CAD: DXF
	Test Report: PDF	

Control Unit Option					
Compulsory Option					
Product Name	Name	Unit price	PDF	DXF	3D
SCP-201L	Speed Controller 1-phase 200V	Please contact us.	PDF	DXF	

You can select products and download CAD data on from our website.

If you move to the gearmotor page from the top page, you can select the gearmotor based on the product name and application. By narrowing down the conditions and entering the usage condition values, you can identify the product and download CAD data and instruction manuals.

Select a product, and download related data.

COMPANY PROFILE

Company Overview

Trade name	NISSEI CORPORATION
Location of headquarters	1-1, Inoue, Izumi-cho, Anjo City, Aichi Prefecture
Foundation	March 12, 1942
Capital	3.475 billion yen
Description of business	1. Manufacture and sale of various types of gearboxes. 2. Manufacture and sale of various types of gears.

History

March 1942	Founded as Japan Sewing Machine Needle Manufacturing in Nagoya.
June 1955	Started the production of small-size gears to orders on a nationwide scale.
May 1964	Established the Anjo Plant at 1, Inoue, Izumi-cho, Anjo City,Aichi Prefecture and started operation (current head office and head office plant).
July 1965	Re- Named as Nissei Industries Co., Ltd.
May 1969	Started with the production and sell power transmission devices, including gearboxes, clutches, and brake units.
October 1974	Begin to manufacture and sell spur gear gearbox “GTR” gearmotor.
May 1980	Begin to produce and sell “GTR” H Type right angle shaft gearbox (hypoid gearmotor).
November 1984	Begin production and sale of the “GTR” MINI Series gearmotor (15 W to 90 W).
September 1985	Established the Anjo South Plant which was specializing in power transmission devices.
March 1987	Begin production and sale of HRHs (high-ratio hypoid gears).
October 1991	Begin production and sale of the “GTR-F Series” right angle hollow bore/right angle shaft gearmotors.
May 1992	Begin production and sale of the “GTR-V Series” (variable speed gearmotors).
April 1998	Begin production and sale of the “GTR-F2 Series” concentric right angle hollow bore/right angle shaft gearmotors.
March 2000	Acquired “ISO 9001” certification.
October 2000	Changed the trade name to NISSEI CORPORATION.
December 2000	Acquired “ISO 14001” certification.
October 2001	Completed the extension construction work of the Anjo South Plant (introduced cell lines to assembly).
April 2002	Begin production and sale of the “GTR-A Series” (low-backlash gearboxes).
September 2002	Begin production and sale of battery powered gearmotors.
October 2003	Begin production and sale of the “GTR” MID Series IP65 gearmotors.
February 2004	Begin production and sale of the “GTR” MID Series explosion-proof gearmotors.
December 2004	Begin production and sale of the Bevel Gearbox K Type (Lightweight model).
July 2006	Begin production and sale of the “GTR-F3 Series” concentric right angle hollow bore/right angle shaft gearmotors.
April 2007	Established the Second Gearbox plant.
January 2008	Begin production and sales of the Compact High Precision Gearbox AGC/AFC Type.
July 2009	Established a new subsidiary, Nissei Trading (Shanghai) Co., Ltd., in China.
February 2010	Begin production and sale of the IPM high-efficiency gearmotors.
July 2011	Begin production and sale of the IPM high-efficiency gearmotor position control type. Begin production and sale of GTR high-efficiency gearmotors (IE2, GB2).
November 2011	Established a new subsidiary, Nissei Gear Motor Mfg. (Changzhou) Co., Ltd., in China.
November 2012	Established Nissei Trading (Shanghai) Co., Ltd. Shenzhen Subsidiary Company in China.
October 2013	Begin production and sales of the High Precision Planetary Gearbox APG Type.
November 2013	GTR gearmotors achieved cumulative sales volume of ten million units.
June 2014	Begin production and sale of GTR medium-size gearmotors conforming to the top runner standard (IE3).
October 2018	Begin production and sale of the “GTR” MID Series (NEXT GTR).
March 2020	Begin production and sale of battery powered gearmotor SD Series
February 2021	Begin production and sale of "High Stiffness Reducer" (large hollow shaft type).
October 2022	Begin production and sale of "High Stiffness Reducer" (flat, lightweight type).
April 2024	Begin production and sale of "High Stiffness Reducer" (right angle shaft type).
October 2024	Begin production and sale of "High Stiffness Reducer" (gear head type).

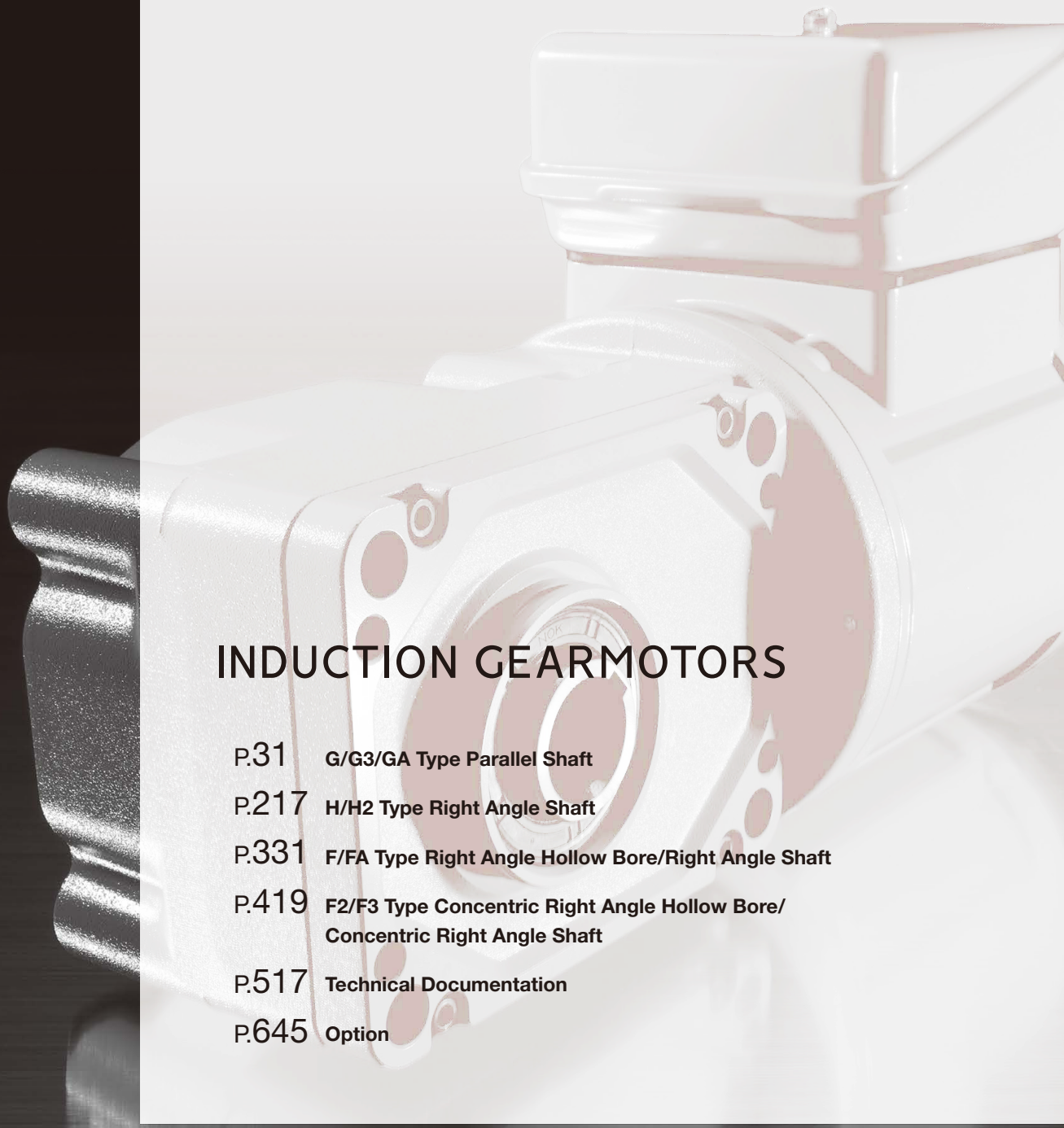

INDUCTION GEARMOTORS

P.31 **G/G3/GA Type Parallel Shaft**

P.217 **H/H2 Type Right Angle Shaft**

P.331 **F/FA Type Right Angle Hollow Bore/Right Angle Shaft**

P.419 **F2/F3 Type Concentric Right Angle Hollow Bore/ Concentric Right Angle Shaft**

P.517 **Technical Documentation**

P.645 **Option**

G/G3/GA Type

Parallel Shaft

Standard Specification
Model and Type Codes
Standard Model Lineup

INDUCTION GEARMOTORS

P.68 1. Gearmotors/Gearmotors with Brake
1-1. Motor Characteristics Table
1-2. Performance Table
1-3. Drawings

P.133 2. IP65 Gearmotors / IP65 Gearmotors with Brake
2-1. Motor Characteristics Table
2-2. Performance Table
2-3. Drawings

P.162 3. Gearmotors with Clutch/Brake
3-1. Motor Characteristics Table
3-2. Performance Table
3-3. Drawings

P.172 4. Speed Control Gearmotors
4-1. Properties and Motor Characteristics Table
4-2. Graph for Speed Characteristics
4-3. Performance Table
4-4. Drawings

P.188 5. Gearboxes (Double Shaft Type)
5-1. Performance Table
5-2. Drawings

P.200 6. S-Type Gearboxes (Type That Can Be Equipped with Designated Motor)
6-1. Performance Table
6-2. Drawings

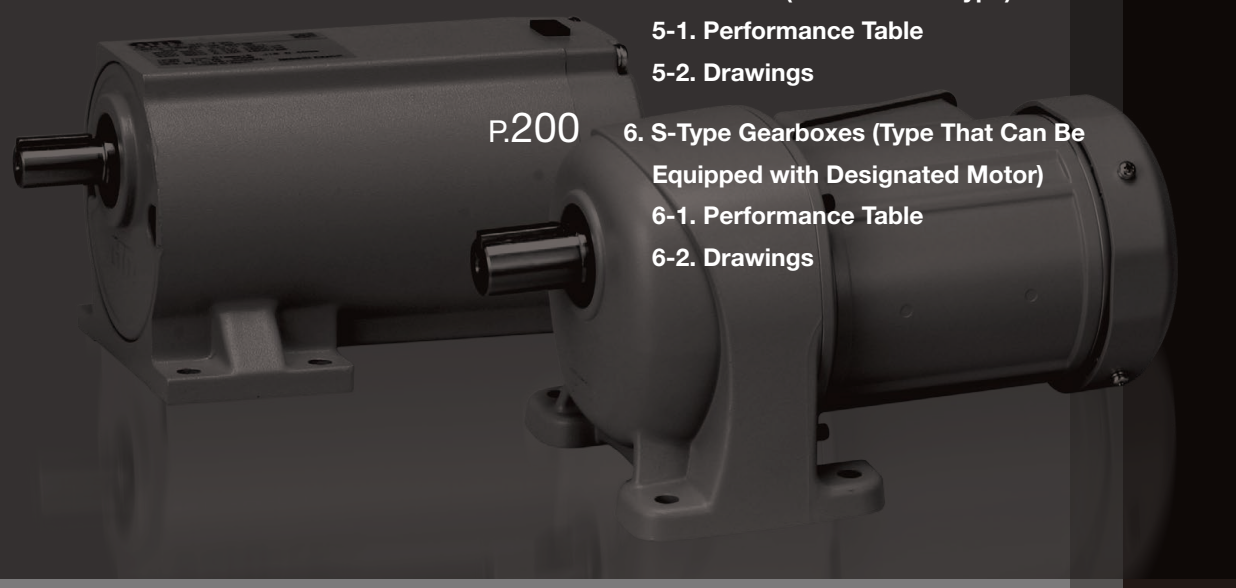

Standard Specification

G Type Gearmotors/Gearmotors with Brake

Series		MINI	
Motor Unit	Number of Phases	3-Phase	1-Phase
	Power	15 W to 90 W	15 W to 90 W
	Power Supply	Standard Voltage 200 V/50 Hz, 200 V/60 Hz, 220 V/60 Hz High Voltage (400 V Class) 380 V/50 Hz, 400 V/50 Hz, 400 V/60 Hz, 440 V/60 Hz	Standard Voltage 100 V/50 Hz, 100 V/60 Hz High Voltage (200 V Class) 200 V/50 Hz, 200 V/60 Hz
	Insulation Class	Ins. B	Ins. B
	Startup Method	Direct Power Input	Capacitor Run
	Cooling Method	Totally Enclosed Non-Ventilated (TENV) (IC410) or Totally Enclosed Fan Cooled (TEFC) (IC411)	
	Number of Motor Poles	4	
	Rating	Continuous	
Gearbox	Reduction Type	Helical Gear	
	Lubrication Type	Grease Lubrication (Maintenance-free)	
	Output Shaft	JIS Key (JIS B 1301-1996 plain form) * The key is included.	
	Output Shaft Material	Carbon Steel	
	Case Material	Aluminum	
Ambient Conditions	Ambient Temperature	-10 °C to 40 °C	
	Ambient Humidity	85 % max (No Condensation)	
	Altitude	1,000 m max	
	Installation Environment	A place free from corrosive gas, explosive gas, and/or vapor. Well ventilated place with no dust.	
	Installation Place	Indoors	
Paint	Paint Color	Gray	
Mounting Direction		No limitations to mounting angle	
Motor Characteristics Table		P.68	P.69
Performance Table		P.73	
Drawings		P.83	

G3 Type Gearmotors/Gearmotors with Brake

Series		MID				
Motor Unit	Number of Phases	3-Phase				1-Phase
	Power	0.1 kW to 2.2 kW				0.1 kW to 0.4 kW
	Power Supply	Type	Global Standards Conformance	Power Supply/Frequency		Standard Voltage 100 V/50 Hz, 100 V/60 Hz High Voltage (200 V Class) 200 V/50 Hz, 200 V/60 Hz
		Standard Voltage	UL/CE/CCC	200 V/50 Hz, 200 V/60 Hz, 220 V/60 Hz		
		High Voltage (400 V Class)	UL/CE/CCC	380 V/50 Hz, 400 V/50 Hz, 400 V/60 Hz, 440 V/60 Hz		
		Special Voltage	South Korea/ Taiwan UL/CE/CCC	220 V/60 Hz, 380 V/60 Hz (Dual Voltage)		
			China UL/CE/CCC	220 V/50 Hz, 230 V/50 Hz, 380 V/50 Hz (Dual Voltage)		
			China/South Korea/Taiwan UL/CE/CCC	220 V/50 Hz, 220 V/60 Hz, 380 V/50 Hz, 380 V/60 Hz (Dual Voltage) (Note 1)		
			Europe/North America UL/cUL/CE/CCC	415 V/50 Hz, 440 V/50 Hz, 480 V/60 Hz		
			North America/ Europe UL/cUL/CE/CCC	230 V/60 Hz, 460 V/60 Hz, 400 V/50 Hz (Dual Voltage) (Note 2)		
			North America/ Europe UL/cUL/CE/CCC	208 V/60 Hz, 230 V/60 Hz, 460 V/60 Hz, 400 V/50 Hz (Note 3)		
			Canada UL/cUL	575 V/60 Hz		
	Insulation Class	Ins. F				Ins. B
	Startup Method	Direct Power Input				Capacitor Start
	Cooling Method	Totally Enclosed Fan Cooled (TEFC) (IC411) (All of 0.1 kW and 0.2 kW models without brake are totally enclosed non-ventilated (TENV) (IC410))				Totally Enclosed Fan Cooled (TEFC) (IC411) (0.1 kW models without a brake are totally enclosed (TENV) (IC410))
	Number of Motor Poles	4				
	Rating	Power	Motor Efficiency	UL/CE Standard	CCC Standard	Continuous
		0.1 kW	IE1	Continuous	Continuous	
		0.2 kW, 0.4 kW (Note 4)	IE2	Continuous	Short Time (120 minutes)	
		0.75 kW or above	IE3, GB3	Continuous	Continuous	
Gearbox	Reduction Type	Helical Gear				
	Lubrication Type	Grease Lubrication (Maintenance-free)				
	Output Shaft	JIS Key (JIS B 1301-1996 plain form) * The key is included.				
	Output Shaft Material	Carbon Steel				
	Case Material	Aluminum (Frame size 50 is made of cast iron.)				
Ambient Conditions	Ambient Temperature	-10 °C to 40 °C				
	Ambient Humidity	85 % max (No Condensation)				
	Altitude	1,000 m max				
	Installation Environment	A well ventilated place free from corrosive gas, explosive gas, vapor and/or chemicals Not to be exposed to direct rain. Not to be exposed to direct sunlight. The brake should not to be exposed to water, dust, oil/grease, or oil mist. Models with water protection rating IPX0 shall not be exposed directly to water.				
Paint	Paint Color	Gray				
Protective Structure (Note 5)		IP44 or IP40				IP40
Mounting Direction		No limitations to mounting angle				
Motor Characteristics Table		P.70				P.72
Performance Table		P.76				P.80
Drawings		P.83				

Note 1: Applicable motor power is 0.1 kW to 0.75 kW.
Note 2: Applicable motor power is 0.75 kW to 2.2 kW.
Note 3: Applicable motor power is 0.1 kW to 0.4 kW.
Note 4: For CCC Standard, Three-phase 0.2 kW and Three-phase 0.4 kW are certified under limited duty cycle. Please be cautious upon selecting this product.
Note 5: The protective structure differs depending on the model.

GA Type Gearmotors/Gearmotors with Brake

Series		MID				
Motor Unit	Number of Phases	3-Phase				1-Phase
	Power	0.4 kW to 2.2 kW				0.4 kW
	Power Supply	Type	Global Standards Conformance	Power Supply/Frequency		Standard Voltage 100 V/50 Hz, 100 V/60 Hz High Voltage (200 V Class) 200 V/50 Hz, 200 V/60 Hz
		Standard Voltage	UL/CE/CCC	200 V/50 Hz, 200 V/60 Hz, 220 V/60 Hz		
		High Voltage (400 V Class)	UL/CE/CCC	380 V/50 Hz, 400 V/50 Hz, 400 V/60 Hz, 440 V/60 Hz		
		Special Voltage	South Korea/ Taiwan UL/CE/CCC	220 V/60 Hz, 380 V/60 Hz (Dual Voltage)		
			China UL/CE/CCC	220 V/50 Hz, 230 V/50 Hz, 380 V/50 Hz (Dual Voltage)		
			China/South Korea/Taiwan UL/CE/CCC	220 V/50 Hz, 220 V/60 Hz, 380 V/50 Hz, 380 V/60 Hz (Dual Voltage) (Note 1)		
			Europe/North America UL/cUL/CE/CCC	415 V/50 Hz, 440 V/50 Hz, 480 V/60 Hz		
			North America/ Europe UL/cUL/CE/CCC	230 V/60 Hz, 460 V/60 Hz, 400 V/50 Hz (Dual Voltage) (Note 2)		
			North America/ Europe UL/cUL/CE/CCC	208 V/60 Hz, 230 V/60 Hz, 460 V/60 Hz, 400 V/50 Hz (Note 3)		
			Canada UL/cUL	575 V/60 Hz		
	Insulation Class	Ins. F				Ins. B
	Startup Method	Direct Power Input				Capacitor Start
	Cooling Method	Totally Enclosed Fan Cooled (TEFC) (IC411)				Totally Enclosed Fan Cooled (TEFC) (IC411)
	Number of Motor Poles	4				
	Rating	Power	Motor Efficiency	UL/CE Standard	CCC Standard	Continuous
		0.4 kW (Note 4)	IE2	Continuous	Short Time (120 minutes)	
		0.75 kW or above	IE3, GB3	Continuous	Continuous	
Gearbox	Reduction Type	Helical Gear				
	Lubrication Type	Grease Lubrication (Maintenance-free)				
	Output Shaft	JIS Key (JIS B 1301-1996 plain form) * The key is included.				
	Output Shaft Material	Carbon Steel				
	Case Material	Aluminum				
Ambient Conditions	Ambient Temperature	-10 °C to 40 °C				
	Ambient Humidity	85 % max (No Condensation)				
	Altitude	1,000 m max				
	Installation Environment	A well ventilated place free from corrosive gas, explosive gas, vapor and/or chemicals Not to be exposed to direct rain. Not to be exposed to direct sunlight. The brake should not to be exposed to water, dust, oil/grease, or oil mist. Models with water protection rating IPX0 shall not be exposed directly to water.				
Paint	Paint Color	Gray				
Protective Structure (Note 5)		IP44 or IP40				IP40
Mounting Direction		No limitations to mounting angle				
Motor Characteristics Table		P.70				P.72
Performance Table		P.76				P.80
Drawings		P.83				P.84

Note 1: Applicable motor power is 0.4 kW to 0.75 kW.
Note 2: Applicable motor power is 0.75 kW to 2.2 kW.
Note 3: Applicable motor power is 0.4 kW.
Note 4: For CCC Standard, Three-phase 0.4 kW is certified under limited duty cycle. Please be cautious upon selecting this product.
Note 5: The protective structure differs depending on the model.

G/G3 Type IP65 Gearmotors/IP65 Gearmotors with Brake

Series		MINI		MID			
Motor Unit	Number of Phases	3-Phase	1-Phase	3-Phase			
	Power	15 W to 90 W	15 W to 60 W	0.1 kW to 2.2 kW			
	Power Supply	Standard Voltage 200 V/50 Hz, 200 V/60 Hz, 220 V/60 Hz	Standard Voltage 100 V/50 Hz, 100 V/60 Hz	Type	Global Standards Conformance	Power Supply/ Frequency	
				Standard Voltage	UL/CE/CCC	200 V/50 Hz, 200 V/60 Hz, 220 V/60 Hz	
				High Voltage (400 V Class)	UL/CE/CCC	380 V/50 Hz, 400 V/50 Hz, 400 V/60 Hz, 440 V/60 Hz	
				Special Voltage	South Korea/ Taiwan UL/CE/CCC	220 V/60 Hz, 380 V/60 Hz (Dual Voltage)	
					China UL/CE/CCC	220 V/50 Hz, 230 V/50 Hz, 380 V/50 Hz (Dual Voltage)	
					China/South Korea/Taiwan UL/CE/CCC	220 V/50 Hz, 220 V/60 Hz, 380 V/50 Hz, 380 V/60 Hz (Dual Voltage) (Note 1)	
					Europe/North America UL/cUL/CE/CCC	415 V/50 Hz, 440 V/50 Hz, 480 V/60 Hz	
					North America/ Europe UL/cUL/CE/CCC	230 V/60 Hz, 460 V/60 Hz, 400 V/50 Hz (Dual Voltage) (Note 2)	
					North America/ Europe UL/cUL/CE/CCC	208 V/60 Hz, 230 V/60 Hz, 460 V/60 Hz, 400 V/50 Hz (Note 3)	
					Canada UL/cUL	575 V/60 Hz	
	Insulation Class	Ins. B		Ins. F			
	Startup Method	Direct Power Input	Capacitor Run	Direct Power Input			
	Cooling Method	Totally Enclosed Non-Ventilated (TENV) (IC410)		Totally Enclosed Fan Cooled (TEFC) (IC411) (All of 0.1 kW and 0.2 kW models without brake are totally enclosed non-ventilated (TENV) (IC410))			
	Number of Motor Poles	4					
	Rating	Continuous		Power	Motor Efficiency	UL/CE Standard	CCC Standard
				0.1 kW	IE1	Continuous	Continuous
				0.2 kW, 0.4 kW (Note 4)	IE2	Continuous	Short Time (120 minutes)
				0.75 kW or above	IE3, GB3	Continuous	Continuous
Gearbox	Reduction Type	Helical Gear					
	Lubrication Type	Grease Lubrication (Maintenance-free)					
	Output Shaft	JIS Key (JIS B 1301-1996 plain form) * The key is included.					
	Output Shaft Material	Stainless Steel		Stainless steel or carbon steel			
	Case Material	Aluminum		Aluminum (Frame size 50 is made of cast iron.)			
Ambient Conditions	Ambient Temperature	-10 °C to 40 °C					
	Ambient Humidity	100 % max (No Condensation)					
	Altitude	1,000 m max					
	Installation Environment	A place free from corrosive gas, explosive gas, and/or vapor Not to be exposed to strong rain and wind. Not to be exposed to direct sunlight. Not to be used underwater, environments with exposure to high pressure water splashes, and exposure to cleansing chemicals.					
Paint	Paint Color	Gray					
Protective Structure		IP65					
Mounting Direction		No limitations to mounting angle					
Motor Characteristics Table		P.133		P.134			
Performance Table		P.136		P.138			
Drawings		P.142		P.143			

Note 1: Applicable motor power is 0.1 kW to 0.75 kW.
Note 2: Applicable motor power is 0.75 kW to 2.2 kW.
Note 3: Applicable motor power is 0.1 kW to 0.4 kW.
Note 4: For CCC Standard, Three-phase 0.2 kW and Three-phase 0.4 kW are certified under limited duty cycle. Please be cautious upon selecting this product.

GA Type IP65 Gearmotors/IP65 Gearmotors with Brake

Series		MID			
Motor Unit	Number of Phases	3-Phase			
	Power	0.4 kW to 2.2 kW			
	Power Supply	Type	Global Standards Conformance	Power Supply/Frequency	
		Standard Voltage	UL/CE/CCC	200 V/50 Hz, 200 V/60 Hz, 220 V/60 Hz	
		High Voltage (400 V Class)	UL/CE/CCC	380 V/50 Hz, 400 V/50 Hz, 400 V/60 Hz, 440 V/60 Hz	
		Special Voltage	South Korea/Taiwan UL/CE/CCC	220 V/60 Hz, 380 V/60 Hz (Dual Voltage)	
			China UL/CE/CCC	220 V/50 Hz, 230 V/50 Hz, 380 V/50 Hz (Dual Voltage)	
			China/South Korea/Taiwan UL/CE/CCC	220 V/50 Hz, 220 V/60 Hz, 380 V/50 Hz, 380 V/60 Hz (Dual Voltage) (Note 1)	
			Europe/North America UL/cUL/CE/CCC	415 V/50 Hz, 440 V/50 Hz, 480 V/60 Hz	
			North America/Europe UL/cUL/CE/CCC	230 V/60 Hz, 460 V/60 Hz, 400 V/50 Hz (Dual Voltage) (Note 2)	
			North America/Europe UL/cUL/CE/CCC	208 V/60 Hz, 230 V/60 Hz, 460 V/60 Hz, 400 V/50 Hz (Note 3)	
			Canada UL/cUL	575 V/60 Hz	
	Insulation Class	Ins. F			
	Startup Method	Direct Power Input			
	Cooling Method	Totally Enclosed Fan Cooled (TEFC) (IC411)			
	Number of Motor Poles	4			
	Rating	Power	Motor Efficiency	UL/CE Standard	CCC Standard
		0.4 kW (Note 4)	IE2	Continuous	Short Time (120 minutes)
		0.75 kW or above	IE3, GB3	Continuous	Continuous
Gearbox	Reduction Type	Helical Gear			
	Lubrication Type	Grease Lubrication (Maintenance-free)			
	Output Shaft	JIS Key (JIS B 1301-1996 plain form) * The key is included.			
	Output Shaft Material	Stainless steel or carbon steel			
	Case Material	Aluminum			
Ambient Conditions	Ambient Temperature	-10 °C to 40 °C			
	Ambient Humidity	100 % max (No Condensation)			
	Altitude	1,000 m max			
	Installation Environment	A place free from corrosive gas, explosive gas, and/or vapor Not to be exposed to strong rain and wind. Not to be exposed to direct sunlight. Not to be used underwater, environments with exposure to high pressure water splashes, and exposure to cleansing chemicals.			
Paint	Paint Color	Gray			
Protective Structure		IP65			
Mounting Direction		No limitations to mounting angle			
Motor Characteristics Table		P.135			
Performance Table		P.141			
Drawings		P.149			

Note 1: Applicable motor power is 0.4 kW to 0.75 kW.
Note 2: Applicable motor power is 0.75 kW to 2.2 kW.
Note 3: Applicable motor power is 0.4 kW.
Note 4: For CCC Standard, Three-phase 0.4 kW is certified under limited duty cycle. Please be cautious upon selecting this product.

G3 Type Gearmotors with Clutch/Brake

Series		MID
Motor Unit	Number of Phases	3-Phase
	Power	0.1 kW to 0.75 kW
	Power Supply	Standard Voltage 200 V/50 Hz, 200 V/60 Hz, 220 V/60 Hz High Voltage (400 V Class) 380 V/50 Hz, 400 V/50 Hz, 400 V/60 Hz, 440 V/60 Hz
	Insulation Class	Ins. F
	Startup Method	Direct Power Input
	Cooling Method	Totally Enclosed Fan Cooled (TEFC) (IC411) (0.1 kW to 0.2 kW models are totally enclosed non-ventilated. (TENV) (IC410))
	Number of Motor Poles	4
	Rating	Continuous
Gearbox	Reduction Type	Helical Gear
	Lubrication Type	Grease Lubrication (Maintenance-free)
	Output Shaft	JIS Key (JIS B 1301-1996 plain form) * The key is included.
	Output Shaft Material	Carbon Steel
	Case Material	Aluminum
Ambient Conditions	Ambient Temperature	-10 °C to 40 °C
	Ambient Humidity	85 % max (No Condensation)
	Altitude	1,000 m max
	Installation Environment	A place free from corrosive gas, explosive gas, and/or vapor. Well ventilated place with no dust.
	Installation Place	Indoors
Paint	Paint Color	Gray
Mounting Direction		No limitations to mounting angle
Motor Characteristics		P.162
Performance Table		P.163
Drawings		P.165

G Type Speed Control Gearmotors

Series		MINI
Motor Unit	Number of Phases	1-Phase
	Power	15 W to 90 W
	Power Supply	Standard Voltage 100 V/50 Hz, 100 V/60 Hz High Voltage (200 V Class) 200 V/50 Hz, 200 V/60 Hz
	Insulation Class	Ins. B
	Startup Method	Capacitor Run
	Cooling Method	Totally Enclosed Non-Ventilated (TENV) (IC410) (60 to 90 W: provided with a forced fan (TEFC) (IC411))
	Number of Motor Poles	4
	Rating	Continuous
Gearbox	Reduction Type	Helical Gear
	Lubrication Type	Grease Lubrication (Maintenance-free)
	Output Shaft	JIS Key (JIS B 1301-1996 plain form) * The key is included.
	Output Shaft Material	Carbon Steel
	Case Material	Aluminum
Ambient Conditions	Ambient Temperature	-10 °C to 40 °C
	Ambient Humidity	85 % max (No Condensation)
	Altitude	1,000 m max
	Installation Environment	A place free from corrosive gas, explosive gas, and/or vapor. Well ventilated place with no dust.
	Installation Place	Indoors
Paint	Paint Color	Gray
Mounting Direction		No limitations to mounting angle
Motor Characteristics Table		P.172
Performance Table		P.174
Drawings		P.177

G3 Type Gearboxes (Double Shaft Type)

Series		MID
4-Poles Motor Power Class		0.1 kW Class to 2.2 kW Class
Gearbox	Reduction Type	Helical Gear
	Lubrication Type	Grease Lubrication (Maintenance-free)
	Output Shaft	JIS Key (JIS B 1301-1996 plain form) * The key is included.
	Input Shaft	JIS Key (JIS B 1301-1996 plain form) * The key is included.
	Output Shaft Material	Carbon Steel
	Input Shaft Material	Carbon Steel
	Case Material	Aluminum (Frame size 50 is made of cast iron.)
Ambient Conditions	Ambient Temperature	-10 °C to 40 °C
	Ambient Humidity	85 % max (No Condensation)
	Altitude	1,000 m max
	Installation Environment	A place free from corrosive gas, explosive gas, and/or vapor. Well ventilated place with no dust.
	Installation Place	Indoors
Paint	Paint Color	Gray
Mounting Direction		No limitations to mounting angle
Performance Table		P.188
Drawings		P.191

GA Type Gearboxes (Double Shaft Type)

Series		MID
4-Poles Motor Power Class		0.4 kW Class to 2.2 kW Class
Gearbox	Reduction Type	Helical Gear
	Lubrication Type	Grease Lubrication (Maintenance-free)
	Output Shaft	JIS Key (JIS B 1301-1996 plain form) * The key is included.
	Input Shaft	JIS Key (JIS B 1301-1996 plain form) * The key is included.
	Output Shaft Material	Carbon Steel
	Input Shaft Material	Carbon Steel
	Case Material	Aluminum
Ambient Conditions	Ambient Temperature	-10 °C to 40 °C
	Ambient Humidity	85 % max (No Condensation)
	Altitude	1,000 m max
	Installation Environment	A place free from corrosive gas, explosive gas, and/or vapor. Well ventilated place with no dust.
	Installation Place	Indoors
Paint	Paint Color	Gray
Mounting Direction		No limitations to mounting angle
Performance Table		P.190
Drawings		P.194

G3 Type S-Type Gearboxes

Series		MID
4-Poles Motor Power Class		0.1 kW Class to 2.2 kW Class
Gearbox	Reduction Type	Helical Gear
	Lubrication Type	Grease Lubrication (Maintenance-free)
	Output Shaft	JIS Key (JIS B 1301-1996 plain form) * The key is included.
	Output Shaft Material	Carbon Steel
	Case Material	Aluminum (Frame size 50 is made of cast iron.)
Ambient Conditions	Ambient Temperature	-10 °C to 40 °C
	Ambient Humidity	85 % max (No Condensation)
	Altitude	1,000 m max
	Installation Environment	A place free from corrosive gas, explosive gas, and/or vapor. Well ventilated place with no dust.
	Installation Place	Indoors
Paint	Paint Color	Gray
Mounting Direction		No limitations to mounting angle
Performance Table		P.200
Drawings		P.203

GA Type S-Type Gearboxes

Series		MID
4-Poles Motor Power Class		0.4 kW Class to 2.2 kW Class
Gearbox	Reduction Type	Helical Gear
	Lubrication Type	Grease Lubrication (Maintenance-free)
	Output Shaft	JIS Key (JIS B 1301-1996 plain form) * The key is included.
	Output Shaft Material	Carbon Steel
	Case Material	Aluminum
Ambient Conditions	Ambient Temperature	-10 °C to 40 °C
	Ambient Humidity	85 % max (No Condensation)
	Altitude	1,000 m max
	Installation Environment	A place free from corrosive gas, explosive gas, and/or vapor. Well ventilated place with no dust.
	Installation Place	Indoors
Paint	Paint Color	Gray
Mounting Direction		No limitations to mounting angle
Performance Table		P.202
Drawings		P.208

Model and Type Codes

Standard Specification Model and Type Codes

G Type Gearmotors/Gearmotors with Brake MINI Series

Mounting Type	Motor Type		Frame Size		Reduction Ratio		Motor Power	Supply Voltage	Terminal Box	Option	Option Code
GL	M	–	12	–	50	–	T25				
GF	MN	–	40	–	1500	–	S90	W	C	X	T6
①	②		③		④		⑤	⑥	⑦	⑧	⑨

①Mounting Type	GL	: Parallel Shaft Foot Mount
	GF	: Parallel Shaft Flange Mount
	GK	: Parallel Shaft Small Flange Mount (Frame sizes 22 to 32)
②Motor Type	M	: With Motor
	MN	: With Brakemotor
	MR	: Motor with Simple Brake (Option)
③Frame Size and Output Shaft Diameter	Output Shaft Diameter	
④Reduction Ratio	5: 1/5 to 1800: 1/1800	
⑤Motor Power	T15	: 3-Phase 15 W
	T25	: 3-Phase 25 W
	T40	: 3-Phase 40 W
	T60	: 3-Phase 60 W
	T90	: 3-Phase 90 W
	S15	: 1-Phase 15 W
	S25	: 1-Phase 25 W
	S40	: 1-Phase 40 W
	S60	: 1-Phase 60 W
	S90	: 1-Phase 90 W
⑥Supply Voltage (High Voltage Option)	Blank	: Standard Voltage 3-Phase: 200 V/50 Hz, 200 V/60 Hz, 220 V/60 Hz 1-Phase: 100 V/50 Hz, 100 V/60 Hz
	W	: High Voltage 3-Phase: 380 V/50 Hz, 400 V/50 Hz, 400 V/60 Hz, 440 V/60 Hz 1-Phase: 200 V/50 Hz, 200 V/60 Hz
⑦Terminal Box (Option) (Note 1)	Blank	: Flying Leads (Standard Type)
	T	: T Type Terminal Box
	K	: K Type Terminal Box
	C	: Terminal Box with Built-in Rectifier for Gearmotor with Brake (Note 1)
⑧Option	Blank	: Standard Specification
	X	: Special Specification Code
⑨Option Code (Note 2)	Lead Wires/Terminal Box Position Code Please refer to the list of option codes on page 581 for details.	

Note 1: When using an inverter for a C type terminal box, be sure to designate an AC switching (A) connection.
Please refer to page 591 for details.
Note 2: The option code will not be shown in the nomenclature on the nameplate. But it will be shown in the Option code row of the nameplate.

G3 Type Gearmotors/Gearmotors with Brake MID Series [3-Phase]

Gearhead Type					Motor Type							Brake Specifications	Option	
Mounting Type	Frame Size	Shaft Arrangement	Reduction Ratio		Motor Type	Motor Specifications	Motor Power	Number of Phases	Supply Voltage	Standards	Terminal Box	Brake	Option	Option Code
G3L	18	N	50	–	M	M	01	T	N	N	T	N		
G3F	32	N	100	–	M	M	04	T	W	N	T	B4	X	AA
G3K	32	N	25	–	M	R	15	T	K	N	T	B2	X	T9HZ
①	②	③	④		⑤	⑥	⑦	⑧	⑨	⑩	⑪	⑫	⑬	⑭

①Mounting Type	G3L	: Parallel Shaft Foot Mount
	G3F	: Parallel Shaft Flange Mount
	G3K	: Parallel Shaft Small Flange Mount (Frame sizes 18 to 32)
②Frame Size and Output Shaft Diameter	Output Shaft Diameter	
③Shaft Arrangement	N	: Parallel Shaft
④Reduction Ratio	5: 1/5 to 12X: 1/1200	
⑤Motor Type	M	: Standard Induction Motor (IP40 or IP44)
⑥Motor Specifications (Note 1)	M	: IE1 Efficiency Ins. F (0.1 kW) IE2 Efficiency Ins. F (0.2 kW to 0.4 kW)
	R	: IE3 Efficiency Ins. F (0.75 kW to 2.2 kW)
⑦Motor Power	01	: 0.1 kW
	02	: 0.2 kW
	04	: 0.4 kW
	08	: 0.75 kW
	15	: 1.5 kW
	22	: 2.2 kW
⑧Number of Phases	T	: 3-Phase
⑨Supply Voltage	⑨Supply Voltage (Note 2)	⑫Brake Specifications (Note 3)

⑨Supply Voltage (Note 2)		⑫Brake Specifications (Note 3)				
		N	B2	B4	J2	J4
N	: 200 V/50 Hz, 200 V/60 Hz, 220 V/60 Hz	○	○		○	
W	: 380 V/50 Hz, 400 V/50 Hz, 400 V/60 Hz, 440 V/60 Hz	○		○		○
K	: 220 V/60 Hz, 380 V/60 Hz	○	○	○	○	○
C	: 220 V/50 Hz, 230 V/50 Hz, 380 V/50 Hz	○	○	○	○	○
D	: 220 V/50 Hz, 220 V/60 Hz, 380 V/50 Hz, 380 V/60 Hz	○	○	○	○	○
E	: 415 V/50 Hz, 440 V/50 Hz, 480 V/60 Hz	○		○		○
U	: 230 V/60 Hz, 460 V/60 Hz, 400 V/50 Hz	○	○	○	○	○
A	: 208 V/60 Hz, 230 V/60 Hz, 460 V/60 Hz, 400 V/50 Hz	○	○	○	○	○
M	: 575 V/60 Hz	○	○		○	

⑩Standards	N	: UL/CE/CCC
	A	: UL* Supply Voltage: M (575 V/60 Hz) only
⑪Terminal Box (Note 4)	T	: T Type Terminal Box (steel plate) (induction motor standard)
	N	: Flying Leads
⑫Brake Specifications	N	: No Brake
	B2	: 200 V Class Brake
	B4	: 400 V Class Brake
	J2	: 200 V Class Brakemotor with Manual Release
	J4	: 400 V Class Brakemotor with Manual Release
⑬Option	Blank	: Standard Specification
	X	: Special Specification Code
⑭Option Code (Note 5)	Built-in Rectifier Connection Code For details, please refer to the list of option codes on page 561.	
	Terminal Box Position Code For details, please refer to the list of option codes on page 582.	
	For other option codes, please refer to the list of option codes on page 1012.	

Note 1: For CCC Standard, Three-phase 0.2 kW and Three-phase 0.4 kW are certified under limited duty cycle. Please be cautious upon selecting the product.
Note 2: Refer to the following for the corresponding motor powers for supply voltages. Supply voltage D: 0.1 kW to 0.75 kW
Supply voltage U: 0.75 kW to 2.2 kW Supply voltage A: 0.1 kW to 0.4 kW
Dual voltage is not available for gearmotors with brake and supply the voltage code “K”, “C”, “D”, “U” and “A”. The motor voltage is limited by the brake specifications. 200 V class gearmotors with brakes (brake code B2, J2 and V2: blue lead wires) also have an operating voltage in the 200 V class. They cannot be operated in the 400 V class. 400 V class gearmotors with brakes (brake codes B4, J4, and V4: yellow lead wires) also have an operating voltage in the 400 V class. They cannot be operated in the 200 V class.
Note 3: ○ indicates a brake specification that can be manufactured. Note 4: With regard to the types of flying leads, only supply voltage codes N are covered.
Note 5: The option code will not be shown in the nomenclature on the nameplate. But it will be shown in the Option code row of the nameplate.

Model and Type Codes

GA Type Gearmotors/Gearmotors with Brake MID Series [3-Phase]

Gearhead Type					Motor Type							Brake Specifications	Option	
Mounting Type	Frame Size	Shaft Arrangement	Reduction Ratio		Motor Type	Motor Specifications	Motor Power	Number of Phases	Supply Voltage	Standards	Terminal Box	Brake	Option	Option Code
GAL	50	N	600	–	M	M	04	T	N	N	T	N		
GAL	50	N	450	–	M	R	08	T	W	N	T	B4	X	AA
GAL	50	N	30	–	M	R	22	T	K	N	T	B2	X	T9HZ
①	②	③	④		⑤	⑥	⑦	⑧	⑨	⑩	⑪	⑫	⑬	⑭

①Mounting Type	GAL : Parallel Shaft Foot Mount (50-frame only)									
②Frame Size and Output Shaft Diameter	Output Shaft Diameter									
③Shaft Arrangement	N : Parallel Shaft									
④Reduction Ratio	30: 1/30 to 12X: 1/1200									
⑤Motor Type	M : Standard Induction Motor (IP40 or IP44)									
⑥Motor Specifications (Note 1)	M : IE2 Efficiency Ins. F (0.4 kW)									
	R : IE3 Efficiency Ins. F (0.75 kW to 2.2 kW)									
⑦Motor Power	04 : 0.4 kW									
	08 : 0.75 kW									
	15 : 1.5 kW									
	22 : 2.2 kW									
⑧Number of Phases	T : 3-Phase									
⑨Supply Voltage	⑨Supply Voltage (Note 2)		⑫Brake Specifications (Note 3)							
			N	B2	B4	J2	J4			
	N	: 200 V/50 Hz, 200 V/60 Hz, 220 V/60 Hz	○	○		○				
	W	: 380 V/50 Hz, 400 V/50 Hz, 400 V/60 Hz, 440 V/60 Hz	○		○		○			
	K	: 220 V/60 Hz, 380 V/60 Hz	○	○	○	○	○			
	C	: 220 V/50 Hz, 230 V/50 Hz, 380 V/50 Hz	○	○	○	○	○			
	D	: 220 V/50 Hz, 220 V/60 Hz, 380 V/50 Hz, 380 V/60 Hz	○	○	○	○	○			
	E	: 415 V/50 Hz, 440 V/50 Hz, 480 V/60 Hz	○		○		○			
	U	: 230 V/60 Hz, 460 V/60 Hz, 400 V/50 Hz	○	○	○	○	○			
	A	: 208 V/60 Hz, 230 V/60 Hz, 460 V/60 Hz, 400 V/50 Hz	○	○	○	○	○			
	M	: 575 V/60 Hz	○	○		○				
⑩Standards	N	: UL/CE/CCC								
	A	: UL* Supply Voltage: M (575 V/60 Hz) only								
⑪Terminal Box (Note 4)	T	: T Type Terminal Box (steel plate) (induction motor standard)								
	N	: Flying Leads								
⑫Brake Specifications	N	: No Brake								
	B2	: 200 V Class Brake								
	B4	: 400 V Class Brake								
	J2	: 200 V Class Brakemotor with Manual Release								
	J4	: 400 V Class Brakemotor with Manual Release								
⑬Option	Blank	: Standard Specification								
	X	: Special Specification Code								
⑭Option Code (Note 5)	Built-in Rectifier Connection Code For details, please refer to the list of option codes on page 561.									
	Terminal Box Position Code For details, please refer to the list of option codes on page 582.									
	For other option codes, please refer to the list of option codes on page 1012.									

Note 1: For CCC Standard, Three-phase 0.4 kW is certified under limited duty cycle. Please be cautious upon selecting the product.
Note 2: Refer to the following for the corresponding motor powers for supply voltages.
Supply voltage D: 0.4 kW to 0.75 kW Supply voltage U: 0.75 kW to 2.2 kW Supply voltage A: 0.4 kW
Dual voltage is not available for gearmotors with brake and supply the voltage code “K”, “C”, “D”, “U” and “A”.
The motor voltage is limited by the brake specifications.
Note 3: ○ indicates a brake specification that can be manufactured.
Note 4: With regard to the types of flying leads, only supply voltage codes N are covered.
Note 5: The option code will not be shown in the nomenclature on the nameplate. But it will be shown in the Option code row of the nameplate.

G3 Type Gearmotors/Gearmotors with Brake MID Series [1-Phase]

Gearhead Type					Motor Type							Brake Specifications	Option	
Mounting Type	Frame Size	Shaft Arrangement	Reduction Ratio		Motor Type	Motor Specifications	Motor Power	Number of Phases	Supply Voltage	Standards	Terminal Box	Brake	Option	Option Code
G3L	18	N	50	–	M	M	01	C	N	J	A	N		
G3F	32	N	450	–	M	M	02	C	W	J	A	B2		
G3K	28	N	100	–	M	M	04	C	N	J	A	B2	X	T9HZ
①	②	③	④		⑤	⑥	⑦	⑧	⑨	⑩	⑪	⑫	⑬	⑭

①Mounting Type	G3L : Parallel Shaft Foot Mount
	G3F : Parallel Shaft Flange Mount
	G3K : Parallel Shaft Small Flange Mount (Frame sizes 18 to 32)
②Frame Size and Output Shaft Diameter	Output Shaft Diameter
③Shaft Arrangement	N : Parallel Shaft
④Reduction Ratio	5: 1/5 to 12X: 1/1200
⑤Motor Type	M : Standard Induction Motor (IP40)
⑥Motor Specifications	M : IE1 Efficiency Ins. B
⑦Motor Power	01 : 0.1 kW
	02 : 0.2 kW
	04 : 0.4 kW
⑧Number of Phases	C : 1-Phase Capacitor Start
⑨Supply Voltage (Note 1)	N : 100 V/50 Hz, 100 V/60 Hz
	W : 200 V/50 Hz, 200 V/60 Hz
⑩Standards	J : No Standards
⑪Terminal Box	A : A Type Terminal Box (Aluminum)
⑫Brake Specifications	N : No Brake
	B2 : 200 V Class Brake
⑬Option	Blank : Standard Specification
	X : Special Specification Code
⑭Option Code (Note 2)	Terminal Box Position Code Please refer to page 584 for details.

Note 1: For voltages/frequencies not listed above, please contact your nearest Sales Office or the CS Center.
Note 2: The option code will not be shown in the nomenclature on the nameplate. But it will be shown in the Option code row of the nameplate.

GA Type Gearmotors/Gearmotors with Brake MID Series [1-Phase]

Gearhead Type					Motor Type							Brake Specifications	Option	
Mounting Type	Frame Size	Shaft Arrangement	Reduction Ratio		Motor Type	Motor Specifications	Motor Power	Number of Phases	Supply Voltage	Standards	Terminal Box	Brake	Option	Option Code
GAL	50	N	600	–	M	M	04	C	N	J	A	N		
GAL	50	N	900	–	M	M	04	C	W	J	A	B2		
GAL	50	N	12X	–	M	M	04	C	N	J	A	B2	X	T9HZ
①	②	③	④		⑤	⑥	⑦	⑧	⑨	⑩	⑪	⑫	⑬	⑭

①Mounting Type	GAL : Parallel Shaft Foot Mount (50-frame only)
②Frame Size and Output Shaft Diameter	Output Shaft Diameter
③Shaft Arrangement	N : Parallel Shaft
④Reduction Ratio	600: 1/600 to 12X: 1/1200
⑤Motor Type	M : Standard Induction Motor (IP40)
⑥Motor Specifications	M : IE1 Efficiency Ins. B
⑦Motor Power	04 : 0.4 kW
⑧Number of Phases	C : 1-Phase Capacitor Start
⑨Supply Voltage (Note 1)	N : 100 V/50 Hz, 100 V/60 Hz
	W : 200 V/50 Hz, 200 V/60 Hz
⑩Standards	J : No Standards
⑪Terminal Box	A : A Type Terminal Box (Aluminum)
⑫Brake Specifications	N : No Brake
	B2 : 200 V Class Brake
⑬Option	Blank : Standard Specification
	X : Special Specification Code
⑭Option Code (Note 2)	Terminal Box Position Code Please refer to page 584 for details.

Note 1: For voltages/frequencies not listed above, please contact your nearest Sales Office or the CS Center.
Note 2: The option code will not be shown in the nomenclature on the nameplate. But it will be shown in the Option code row of the nameplate.

G Type IP65 Gearmotors/IP65 Gearmotors with Brake MINI Series

Mounting Type	Motor Type		Frame Size		Reduction Ratio		Motor Power	Option	Option Code
GL	W	–	12	–	50	–	T25		
GF	V	–	18	–	200	–	T90	X	T6
①	②		③		④		⑤	⑥	⑦

①Mounting Type	GL	: Parallel Shaft Foot Mount
	GF	: Parallel Shaft Flange Mount
②Motor Type	W	: With IP65 Motor (Output Shaft Material: Stainless Steel)
	V	: With IP65 Brakemotor (Output Shaft Material: Stainless Steel)
③Frame Size and Output Shaft Diameter	Output Shaft Diameter	
④Reduction Ratio	5: 1/5 to 240: 1/240	
⑤Motor Power and Supply Voltage/ Frequency	T15	: 3-Phase 15 W
	T25	: 3-Phase 25 W
	T40	: 3-Phase 40 W
	T60	: 3-Phase 60 W
	T90	: 3-Phase 90 W
	S15	: 1-Phase 15 W
	S25	: 1-Phase 25 W
	S40	: 1-Phase 40 W
	S60	: 1-Phase 60 W
	3-Phase 1-Phase	: 200 V/50 Hz, 200 V/60 Hz, 220 V/60 Hz : 100 V/50 Hz, 100 V/60 Hz
⑥Option	Blank	: Standard Specification
	X	: Special Specification Code
⑦Option Code (Note 1)	Cabtyre Cable Position Code Please refer to the list of option codes on page 581 for details.	

Note 1: The option code will not be shown in the nomenclature on the nameplate. But it will be shown in the Option code row of the nameplate.

G3 Type IP65 Gearmotors/IP65 Gearmotors with Brake MID Series

Gearhead Type					Motor Type							Brake Specifications	Option	
Mounting Type	Frame Size	Shaft Arrangement	Reduction Ratio		Motor Type	Motor Specifications	Motor Power	Number of Phases	Supply Voltage	Standards	Terminal Box	Brake	Option	Option Code
G3L	18	N	50	–	W	M	01	T	N	N	E	N		
G3F	32	S	100	–	W	M	04	T	W	N	E	V4	X	AA
G3K	32	N	60	–	W	R	08	T	K	N	E	V2	X	T9HZ
①	②	③	④		⑤	⑥	⑦	⑧	⑨	⑩	⑪	⑫	⑬	⑭

①Mounting Type	G3L : Parallel Shaft Foot Mount		
	G3F : Parallel Shaft Flange Mount		
	G3K : Parallel Shaft Small Flange Mount (Frame sizes 18 to 32)		
②Frame Size and Output Shaft Diameter	Output Shaft Diameter		
③Shaft Arrangement and Material	Shaft Arrangement		Parallel Shaft
	Material	Carbon Steel	N
		Stainless Steel	S
④Reduction Ratio	5: 1/5 to 12X: 1/1200		
⑤Motor Type	W : IP65 Induction Motor		
⑥Motor Specifications (Note 1)	M : IE1 Efficiency Ins. F (0.1 kW) IE2 Efficiency Ins. F (0.2 kW to 0.4 kW)		
	R : IE3 Efficiency Ins. F (0.75 kW to 2.2 kW)		
⑦Motor Power	01 : 3-Phase 0.1 kW		
	02 : 3-Phase 0.2 kW		
	04 : 3-Phase 0.4 kW		
	08 : 3-Phase 0.75 kW		
	15 : 3-Phase 1.5 kW		
	22 : 3-Phase 2.2 kW		
⑧Number of Phases (Note 2)	T : 3-Phase		
⑨Supply Voltage	⑨Supply Voltage (Note 3)	⑫Brake Specifications (Note 4)	
		N	V2	V4
	N : 200 V/50 Hz, 200 V/60 Hz, 220 V/60 Hz	○	○	
	W : 380 V/50 Hz, 400 V/50 Hz, 400 V/60 Hz, 440 V/60 Hz	○		○
	K : 220 V/60 Hz, 380 V/60 Hz	○	○	○
	C : 220 V/50 Hz, 230 V/50 Hz, 380 V/50 Hz	○	○	○
	D : 220 V/50 Hz, 220 V/60 Hz, 380 V/50 Hz, 380 V/60 Hz	○	○	○
	E : 415 V/50 Hz, 440 V/50 Hz, 480 V/60 Hz	○		○
	U : 230 V/60 Hz, 460 V/60 Hz, 400 V/50 Hz	○	○	○
	A : 208 V/60 Hz, 230 V/60 Hz, 460 V/60 Hz, 400 V/50 Hz	○	○	○
	M : 575 V/60 Hz	○	○	
⑩Standards	N : UL/CE/CCC			
	A : UL* Supply Voltage: M (575 V/60 Hz) only			
⑪Terminal Box	E : E Type Terminal Box (Aluminum)			
⑫Brake Specifications (Note 6)	N : No Brake			
	V2 : IP65 200 V Class Brake (Note 5)			
	V4 : IP65 400 V Class Brake (Note 5)			
⑬Option	Blank : Standard Specification			
	X : Special Specification Code			
⑭Option Code (Note 7)	Built-in Rectifier Connection Code For details, please refer to the list of option codes on page 561.			
	Terminal Box Position Code For details, please refer to the list of option codes on page 582.			
	For other option codes, please refer to the list of option codes on page 1012.			

Note 1: For CCC Standard, Three-phase 0.2 kW and Three-phase 0.4 kW are certified under limited duty cycle. Please be cautious upon selecting the product.
Note 2: Single-phase types are not available.
Note 3: Refer to the following for the corresponding motor powers for supply voltages.
Supply voltage D: 0.1 kW to 0.75 kW Supply voltage U: 0.75 kW to 2.2 kW Supply voltage A: 0.1 kW to 0.4 kW
Dual voltage is not available for gearmotors with brake and supply the voltage code “K”, “C”, “D”, “U” and “A”.
The motor voltage is limited by the brake specifications.
Note 4: ○ indicates a brake specification that can be manufactured.
Note 5: IP65 gearmotors with a brake are not available for 1.5 kW and 2.2 kW.
Note 6: The rectifier is included with the product.
Note 7: The option code will not be shown in the nomenclature on the nameplate. But it will be shown in the Option code row of the nameplate.

GA Type IP65 Gearmotors/IP65 Gearmotors with Brake MID Series

Gearhead Type					Motor Type							Brake Specifications	Option	
Mounting Type	Frame Size	Shaft Arrangement	Reduction Ratio		Motor Type	Motor Specifications	Motor Power	Number of Phases	Supply Voltage	Standards	Terminal Box	Brake	Option	Option Code
GAL	50	N	600	–	W	M	04	T	N	N	E	N		
GAL	50	N	450	–	W	R	08	T	W	N	E	V4	X	AA
GAL	50	N	30	–	W	R	22	T	K	N	E	V2	X	T9HZ
①	②	③	④		⑤	⑥	⑦	⑧	⑨	⑩	⑪	⑫	⑬	⑭

①Mounting Type	GAL : Parallel Shaft Foot Mount (50-frame only)		
②Frame Size and Output Shaft Diameter	Output Shaft Diameter		
③Shaft Arrangement and Material	Shaft Arrangement		Parallel Shaft
	Material	Carbon Steel	N
		Stainless Steel	S
④Reduction Ratio	3: 1/30 to 12X: 1/1200		
⑤Motor Type	W : IP65 Induction Motor		
⑥Motor Specifications (Note 1)	M : IE2 Efficiency Ins. F (0.4 kW)		
	R : IE3 Efficiency Ins. F (0.75 kW to 2.2 kW)		
⑦Motor Power	04 : 3-Phase 0.4 kW		
	08 : 3-Phase 0.75 kW		
	15 : 3-Phase 1.5 kW		
	22 : 3-Phase 2.2 kW		
⑧Number of Phases (Note 2)	T : 3-Phase		

⑨Supply Voltage (Note 3)		⑫Brake Specifications (Note 4)		
		N	V2	V4
N	: 200 V/50 Hz, 200 V/60 Hz, 220 V/60 Hz	○	○	
W	: 380 V/50 Hz, 400 V/50 Hz, 400 V/60 Hz, 440 V/60 Hz	○		○
K	: 220 V/60 Hz, 380 V/60 Hz	○	○	○
C	: 220 V/50 Hz, 230 V/50 Hz, 380 V/50 Hz	○	○	○
D	: 220 V/50 Hz, 220 V/60 Hz, 380 V/50 Hz, 380 V/60 Hz	○	○	○
E	: 415 V/50 Hz, 440 V/50 Hz, 480 V/60 Hz	○		○
U	: 230 V/60 Hz, 460 V/60 Hz, 400 V/50 Hz	○	○	○
A	: 208 V/60 Hz, 230 V/60 Hz, 460 V/60 Hz, 400 V/50 Hz	○	○	○
M	: 575 V/60 Hz	○	○	

⑨Supply Voltage		
⑩Standards	N	: UL/CE/CCC
	A	: UL* Supply Voltage: M (575 V/60 Hz) only
⑪Terminal Box	E	: E Type Terminal Box (Aluminum)
⑫Brake Specifications (Note 6)	N	: No Brake
	V2	: IP65 200 V Class Brake (Note 5)
	V4	: IP65 400 V Class Brake (Note 5)
⑬Option	Blank	: Standard Specification
	X	: Special Specification Code
⑭Option Code (Note 7)	Built-in Rectifier Connection Code For details, please refer to the list of option codes on page 561.	
	Terminal Box Position Code For details, please refer to the list of option codes on page 582.	
	For other option codes, please refer to the list of option codes on page 1012.	

Note 1: For CCC Standard, Three-phase 0.4 kW is certified under limited duty cycle. Please be cautious upon selecting the product.
Note 2: Single-phase types are not available.
Note 3: Refer to the following for the corresponding motor powers for supply voltages.
Supply voltage D: 0.4 kW to 0.75 kW Supply voltage U: 0.75 kW to 2.2 kW Supply voltage A: 0.4 kW
Dual voltage is not available for gearmotors with brake and supply the voltage code “K”, “C”, “D”, “U” and “A”.
The motor voltage is limited by the brake specifications.
Note 4: ○ indicates a brake specification that can be manufactured.
Note 5: IP65 gearmotors with a brake are not available for 1.5 kW and 2.2 kW.
Note 6: The rectifier is included with the product.
Note 7: The option code will not be shown in the nomenclature on the nameplate. But it will be shown in the Option code row of the nameplate.

G3 Type Gearmotors with Clutch/Brake MID Series

Gearhead Type					Motor Type							Brake Specifications	Option	
Mounting Type	Frame Size	Shaft Arrangement	Reduction Ratio		Motor Type	Motor Specifications	Motor Power	Number of Phases	Supply Voltage	Standards	Terminal Box	Brake	Option	Option Code
G3L	18	N	25	–	E	M	02	T	N	J	T	N		
G3F	22	N	80	–	E	M	04	T	W	J	T	N		
G3K	32	N	100	–	E	R	08	T	W	J	T	N	X	T9HZ
①	②	③	④		⑤	⑥	⑦	⑧	⑨	⑩	⑪	⑫	⑬	⑭

①Mounting Type	G3L : Parallel Shaft Foot Mount
	G3F : Parallel Shaft Flange Mount
	G3K : Parallel Shaft Small Flange Mount (Frame sizes 18 to 32)
②Frame Size and Output Shaft Diameter	Output Shaft Diameter
③Shaft Arrangement	N : Parallel Shaft
④Reduction Ratio	5: 1/5 to 200: 1/200
⑤Motor Type	E : Induction Motor With Clutch/Brake
⑥Motor Specifications	M : IE1 Efficiency Ins. F (0.1 kW) IE2 Efficiency Ins. F (0.2 kW to 0.4 kW)
	R : IE3 Efficiency Ins. F
⑦Motor Power	01 : 0.1 kW
	02 : 0.2 kW
	04 : 0.4 kW
	08 : 0.75 kW
⑧Number of Phases	T : 3-Phase
⑨Supply Voltage (Note 1)	N : 200 V/50 Hz, 200 V/60 Hz, 220 V/60 Hz
	W : 380 V/50 Hz, 400 V/50 Hz, 400 V/60 Hz, 440 V/60 Hz
⑩Standards	J : No Standards
⑪Terminal Box	T : T Type Terminal Box (Steel Plate)
⑫Brake Specifications	N : No Brake (With Clutch/Brake)
⑬Option	Blank : Standard Specification
	X : Special Specification Code
⑭Option Code (Note 2)	Terminal Box Position Code Please refer to page 584 for details.

Note 1: For voltages/frequencies not listed above, please contact your nearest Sales Office or the CS Center.
Note 2: The option code will not be shown in the nomenclature on the nameplate. But it will be shown in the Option code row of the nameplate.
Note 3: Please avoid using gearmotors with clutch/brake in vertical operation (lifting). There is a danger of falling during a power outage.

G Type Speed Control Gearmotors MINI Series

Mounting Type	Motor Type		Frame Size		Reduction Ratio		Motor Power	Supply Voltage	Terminal Box	Option	Option Code
GL	U	–	12	–	50	–	S25				
GF	P	–	40	–	1500	–	S90	W	C	X	T6
①	②		③		④		⑤	⑥	⑦	⑧	⑨

①Mounting Type	GL	: Parallel Shaft Foot Mount
	GF	: Parallel Shaft Flange Mount
	GK	: Parallel Shaft Small Flange Mount (Frame sizes 22 to 32)
②Motor Type	U	: U Type with Speed Control Motor (Controller Set)
	P	: P Type with Speed Control Motor (Controller: Sold Separately)
③Frame Size and Output Shaft Diameter	Output Shaft Diameter	
④Reduction Ratio	5: 1/5 to 1800: 1/1800	
⑤Motor Power	S15	: 1-Phase 15 W
	S25	: 1-Phase 25 W
	S40	: 1-Phase 40 W
	S60	: 1-Phase 60 W
	S90	: 1-Phase 90 W
⑥Supply Voltage (High Voltage Option)	Blank 1-Phase	: Standard Voltage : 100 V/50 Hz, 100 V/60 Hz
	W 1-Phase	: High Voltage (200 V Class) : 200 V/50 Hz, 200 V/60 Hz
⑦Terminal Box (Option) (Note 1)	Blank	: Flying Leads (Standard Type)
	C	: Terminal Box for P Type Speed Controller
⑧Option	Blank	: Standard Specification
	X	: Special Specification Code
⑨Option Code (Note 2)	Lead Wires/Terminal Box Position Code Please refer to the list of option codes on page 581 for details.	

Note 1: Please refer to page 639 for the specifications of terminal boxes.
Note 2: The option code will not be shown in the nomenclature on the nameplate. But it will be shown in the Option code row of the nameplate.

Controller

■ Type Code

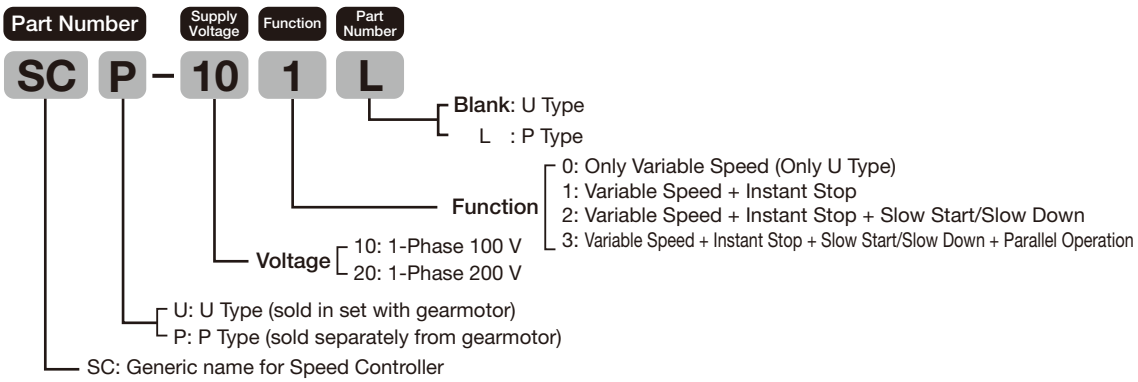

G3 Type Gearboxes (Double Shaft Type) MID Series

Mounting Type	Motor Type		Frame Size		Reduction Ratio		Motor Power Class	Option	Terminal Box	Option	Option Code
G3L		–	22	–	50	–	020				
G3F		–	40	–	200	–	075			X	
①	②		③		④		⑤	⑥	⑦	⑧	⑨

①Mounting Type	G3L : Parallel Shaft Foot Mount
	G3F : Parallel Shaft Flange Mount
	G3K : Parallel Shaft Small Flange Mount (Frame sizes 18 to 32)
②Motor Type	Blank : Without Motor (Double Shaft Type)
③Frame Size and Output Shaft Diameter	Output Shaft Diameter
④Reduction Ratio	5: 1/5 to 1200: 1/1200
⑤Motor Power Class	010 : 0.1 kW Class
	020 : 0.2 kW Class
	040 : 0.4 kW Class
	075 : 0.75 kW Class
	150 : 1.5 kW Class
	220 : 2.2 kW Class
⑥Option	Blank : Standard Specification There is no applicable option.
⑦Terminal Box	Blank : Standard Specification
⑧Option	Blank : Standard Specification
	X : Special Specification Code
⑨Option Code (Note 1)	Blank : Standard Specification

Note 1: The option code will not be shown in the nomenclature on the nameplate. But it will be shown in the Option code row of the nameplate.

GA Type Gearboxes (Double Shaft Type) MID Series

Mounting Type	Motor Type		Frame Size		Reduction Ratio		Motor Power Class	Option	Terminal Box	Option	Option Code
GAL		–	50	–	600	–	040				
GAL		–	50	–	450	–	075				
GAL		–	50	–	30	–	220			X	
①	②		③		④		⑤	⑥	⑦	⑧	⑨

①Mounting Type	GAL : Parallel Shaft Foot Mount (50-frame only)
②Motor Type	Blank : Without Motor (Double Shaft Type)
③Frame Size and Output Shaft Diameter	Output Shaft Diameter
④Reduction Ratio	30: 1/30 to 1200: 1/1200
⑤Motor Power Class	040 : 0.4 kW Class
	075 : 0.75 kW Class
	150 : 1.5 kW Class
	220 : 2.2 kW Class
⑥Option	Blank : Standard Specification There is no applicable option.
⑦Terminal Box	Blank : Standard Specification
⑧Option	Blank : Standard Specification
	X : Special Specification Code
⑨Option Code (Note 1)	Blank : Standard Specification

Note 1: The option code will not be shown in the nomenclature on the nameplate. But it will be shown in the Option code row of the nameplate.

Model and Type Codes

G3 Type S-Type Gearboxes MID Series

Mounting Type	Motor Type		Frame Size		Reduction Ratio		Motor Power Class	Option	Terminal Box	Option
G3L	S	–	22	–	50	–	020			
G3F	S	–	40	–	200	–	075			X
①	②		③		④		⑤	⑥	⑦	⑧

①Mounting Type	G3L	: Parallel Shaft Foot Mount
	G3F	: Parallel Shaft Flange Mount
	G3K	: Parallel Shaft Small Flange Mount (Frame sizes 18 to 32)
②Motor Type	S	: Type That Can be Equipped with Designated Motor (S-Type)
③Frame Size and Output Shaft Diameter	Output Shaft Diameter	
④Reduction Ratio	5: 1/5 to 1200: 1/1200	
⑤Motor Power Class	010	: 0.1 kW Class
	020	: 0.2 kW Class
	040	: 0.4 kW Class
	075	: 0.75 kW Class
	150	: 1.5 kW Class
	220	: 2.2 kW Class
⑥Option	Blank	: Standard Specification
⑦Terminal Box	Blank	: Standard Specification
⑧Option	Blank	: Standard Specification
	X	: Special Specification Code

GA Type S-Type Gearboxes MID Series

Mounting Type	Motor Type		Frame Size		Reduction Ratio		Motor Power Class	Option	Terminal Box	Option
GAL	S	–	50	–	600	–	040			
GAL	S	–	50	–	100	–	100			X
①	②		③		④		⑤	⑥	⑦	⑧

①Mounting Type	GAL : Parallel Shaft Foot Mount (50-frame only)
②Motor Type	S : Type That Can be Equipped with Designated Motor (S-Type)
③Frame Size and Output Shaft Diameter	Output Shaft Diameter
④Reduction Ratio	30: 1/30 to 1200: 1/1200
⑤Motor Power Class	040 : 0.4 kW Class
	075 : 0.75 kW Class
	150 : 1.5 kW Class
	220 : 2.2 kW Class
⑥Option	Blank : Standard Specification
⑦Terminal Box	Blank : Standard Specification
⑧Option	Blank : Standard Specification
	X : Special Specification Code

G Type Gearmotors/Gearmotors with Brake MINI Series

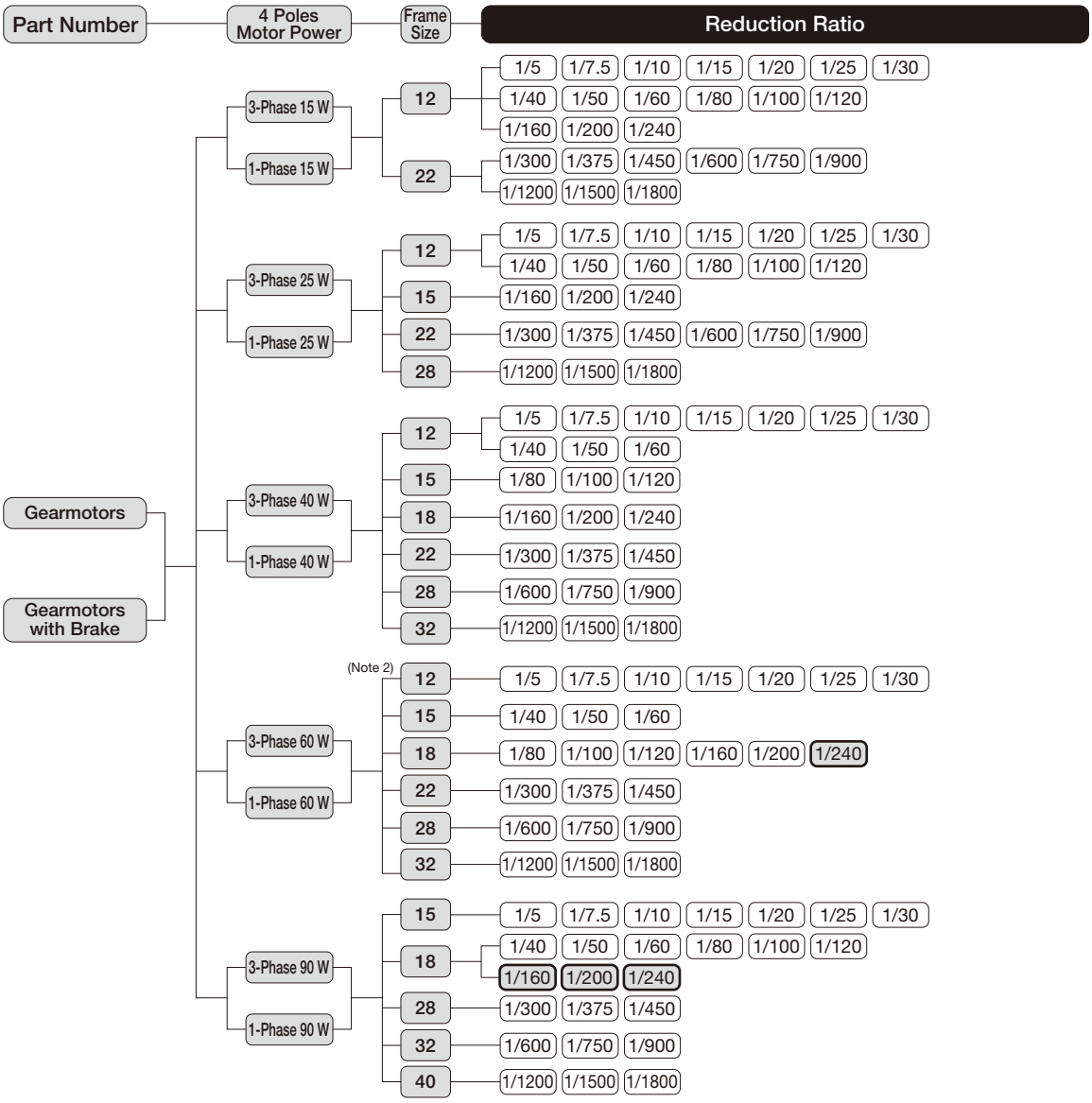

Note 1: Please note that mounting type GK is available only for frame sizes 22 to 32.
Note 2: The frame size for types other than Three-phase standard voltage types is 15. The frame size for all Single-phase types is 15.
Note 3: ⬭ indicates a limited torque type. Please make sure to check the allowable output shaft torque in the performance table.

G3 Type Gearmotors/Gearmotors with Brake MID Series

Part Number	4 Poles Motor Power	Frame Size	Reduction Ratio
Gearmotors / Gearmotors with Brake / Brakemotors with Manual Release	3-Phase 0.1 kW	18	1/5, 1/10, 1/15, 1/20, 1/25, 1/30, 1/40, 1/50
		22	1/60, 1/80, 1/100, 1/120, 1/160, 1/200
		28	1/300, 1/375, 1/450
		32	1/600, 1/750, **1/900**, **1/1200**
	3-Phase 0.2 kW	18	1/5, 1/10, 1/15, 1/20, 1/25
		22	1/30, 1/40, 1/50, 1/60, 1/80, **1/100**
		28	1/100, 1/120, 1/160, 1/200
		32	1/300, 1/375, 1/450
		40	1/600, **1/750**, **1/900**, **1/1200**
	3-Phase 0.4 kW	22	1/5, 1/10, 1/15, 1/20, 1/25
		28	1/30, 1/40, 1/50, 1/60, 1/80, **1/100**
		32	1/100, 1/120, 1/160, 1/200
		40	1/300, **1/375**, **1/450**
		50	**1/600**, **1/750**, **1/900**, **1/1200**
	3-Phase 0.75 kW	28	1/5, 1/10, 1/15, 1/20, 1/25
		32	1/30, 1/40, 1/50, 1/60, 1/80, **1/100**
		40	1/100, 1/120, 1/160, 1/200
		50	1/300, **1/375**, **1/450**
	3-Phase 1.5 kW	32	1/5, 1/10, 1/15, 1/20, 1/25
		40	1/30, 1/40, 1/50, 1/60, 1/80, **1/100**
		50	1/100, 1/120, **1/160**, **1/200**
	3-Phase 2.2 kW	40	1/5, 1/10, 1/15, 1/20, 1/25
		50	1/30, 1/40, 1/50, 1/60, 1/80, **1/100**

Note 1: The G3 Type is available in three types: Foot mount, Flange mount, and Small flange mount.
Please note that mounting type G3K is available only for frame sizes 18 to 32.
Note 2: ▭ indicates a limited torque type. Please make sure to check the allowable output shaft torque in the performance table.

GA Type Gearmotors/Gearmotors with Brake MID Series

Part Number	4 Poles Motor Power	Frame Size	Reduction Ratio
Gearmotors / Gearmotors with Brake / Brakemotors with Manual Release	3-Phase 0.4 kW	50	1/600, 1/750, 1/900, 1/1200
	3-Phase 0.75 kW	50	1/300, 1/375, 1/450
	3-Phase 1.5 kW	50	1/100, 1/120, 1/160, 1/200
	3-Phase 2.2 kW	50	1/30, 1/40, 1/50, 1/60, 1/80, 1/100

Note 1: ▭ indicates a limited torque type. Please make sure to check the allowable output shaft torque in the performance table.

G3 Type Gearmotors/Gearmotors with Brake MID Series

Part Number	4 Poles Motor Power	Frame Size	Reduction Ratio
Gearmotors / Gearmotors with Brake	1-Phase 0.1 kW	18	1/5, 1/10, 1/15, 1/20, 1/25, 1/30, 1/40, 1/50
		22	1/60, 1/80, 1/100, 1/120, 1/160, 1/200
		28	1/300, 1/375, 1/450
		32	1/600, 1/750, **1/900**, **1/1200**
	1-Phase 0.2 kW	18	1/5, 1/10, 1/15, 1/20, 1/25
		22	1/30, 1/40, 1/50, 1/60, 1/80, **1/100**
		28	1/100, 1/120, 1/160, 1/200
		32	1/300, 1/375, 1/450
		40	1/600, **1/750**, **1/900**, **1/1200**
	1-Phase 0.4 kW	22	1/5, 1/10, 1/15, 1/20, 1/25
		28	1/30, 1/40, 1/50, 1/60, 1/80, **1/100**
		32	1/100, 1/120, 1/160, 1/200
		40	1/300, **1/375**, **1/450**
		50	**1/600**, **1/750**, **1/900**, **1/1200**

Note 1: The G3 Type is available in three types: Foot mount, Flange mount, and Small flange mount.
Please note that mounting type G3K is available only for frame sizes 18 to 32.
Note 2: ▭ indicates a limited torque type. Please make sure to check the allowable output shaft torque in the performance table.

GA Type Gearmotors/Gearmotors with Brake MID Series

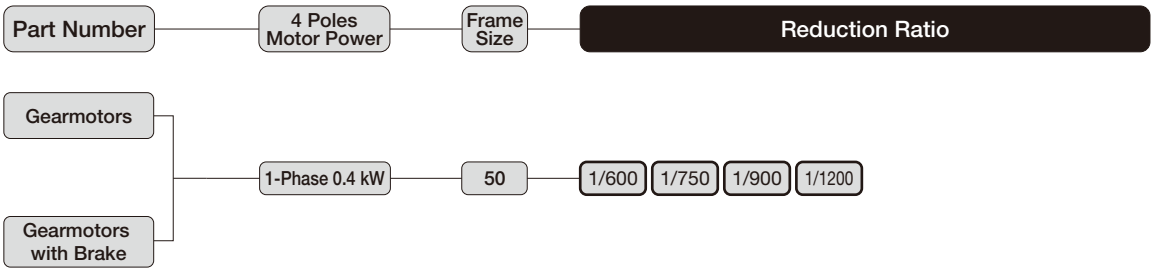

Note 1: ▭ indicates a limited torque type. Please make sure to check the allowable output shaft torque in the performance table.

G Type IP65 Gearmotors/IP65 Gearmotors with Brake MINI Series

Part Number	4 Poles Motor Power	Frame Size	Reduction Ratio
IP65 Gearmotors / IP65 Gearmotors with Brake	3-Phase 15 W / 1-Phase 15 W	12	1/5, 1/7.5, 1/10, 1/15, 1/20, 1/25, 1/30, 1/40, 1/50, 1/60, 1/80, 1/100, 1/120, 1/160, 1/200, 1/240
	3-Phase 25 W / 1-Phase 25 W	12	1/5, 1/7.5, 1/10, 1/15, 1/20, 1/25, 1/30, 1/40, 1/50, 1/60, 1/80, 1/100, 1/120
		15	1/160, 1/200, 1/240
	3-Phase 40 W	12	1/5, 1/7.5, 1/10, 1/15, 1/20, 1/25, 1/30, 1/40, 1/50, 1/60
		15	1/80, 1/100, 1/120
		18	1/160, 1/200, 1/240
	1-Phase 40 W	15	1/5, 1/7.5, 1/10, 1/15, 1/20, 1/25, 1/30, 1/40, 1/50, 1/60, 1/80, 1/100, 1/120
		18	1/160, 1/200, 1/240
	3-Phase 60 W	15	1/5, 1/7.5, 1/10, 1/15, 1/20, 1/25, 1/30, 1/40, 1/50, 1/60
		18	1/80, 1/100, 1/120, 1/160, 1/200, 1/240
	1-Phase 60 W	18	1/5, 1/7.5, 1/10, 1/15, 1/20, 1/25, 1/30, 1/40, 1/50, 1/60, 1/80, 1/100, 1/120, 1/160, 1/200, 1/240
	3-Phase 90 W	18	1/5, 1/7.5, 1/10, 1/15, 1/20, 1/25, 1/30, 1/40, 1/50, 1/60, 1/80, 1/100, 1/120, 1/160, 1/200, 1/240

Note 1: Single-phase types are not available.
Note 2: ⬭ indicates a limited torque type. Please make sure to check the allowable output shaft torque in the performance table.

G3 Type IP65 Gearmotors/IP65 Gearmotors with Brake MID Series

Part Number	4 Poles Motor Power	Frame Size	Reduction Ratio
IP65 Gearmotors / IP65 Gearmotors with Brake	3-Phase 0.1 kW	18	1/5, 1/10, 1/15, 1/20, 1/25, 1/30, 1/40, 1/50
		22	1/60, 1/80, 1/100, 1/120, 1/160, 1/200
		28	1/300, 1/375, 1/450
		32	1/600, 1/750, **1/900**, **1/1200**
	3-Phase 0.2 kW	18	1/5, 1/10, 1/15, 1/20, 1/25
		22	1/30, 1/40, 1/50, 1/60, 1/80, **1/100**
		28	1/100, 1/120, 1/160, 1/200
		32	1/300, 1/375, 1/450
		40	1/600, **1/750**, **1/900**, **1/1200**
	3-Phase 0.4 kW	22	1/5, 1/10, 1/15, 1/20, 1/25
		28	1/30, 1/40, 1/50, 1/60, 1/80, **1/100**
		32	1/100, 1/120, 1/160, 1/200
		40	1/300, **1/375**, **1/450**
		50	**1/600**, **1/750**, **1/900**, **1/1200**
	3-Phase 0.75 kW	28	1/5, 1/10, 1/15, 1/20, 1/25
		32	1/30, 1/40, 1/50, 1/60, 1/80, **1/100**
		40	1/100, 1/120, 1/160, 1/200
		50	1/300, **1/375**, **1/450**
	(Note 2) 3-Phase 1.5 kW	32	1/5, 1/10, 1/15, 1/20, 1/25
		40	1/30, 1/40, 1/50, 1/60, 1/80, **1/100**
		50	1/100, 1/120, **1/160**, **1/200**
	(Note 2) 3-Phase 2.2 kW	40	1/5, 1/10, 1/15, 1/20, 1/25
		50	1/30, 1/40, 1/50, 1/60, 1/80, **1/100**

Note 1: The G3 Type is available in three types: Foot mount, Flange mount, and Small flange mount.
Please note that mounting type G3K is available only for frame sizes 18 to 32.
Note 2: IP65 gearmotors with a brake are not available with motor powers of 1.5 kW and 2.2 kW.
Note 3: ▭ indicates a limited torque type. Please make sure to check the allowable output shaft torque in the performance table.

GA Type IP65 Gearmotors/IP65 Gearmotors with Brake MID Series

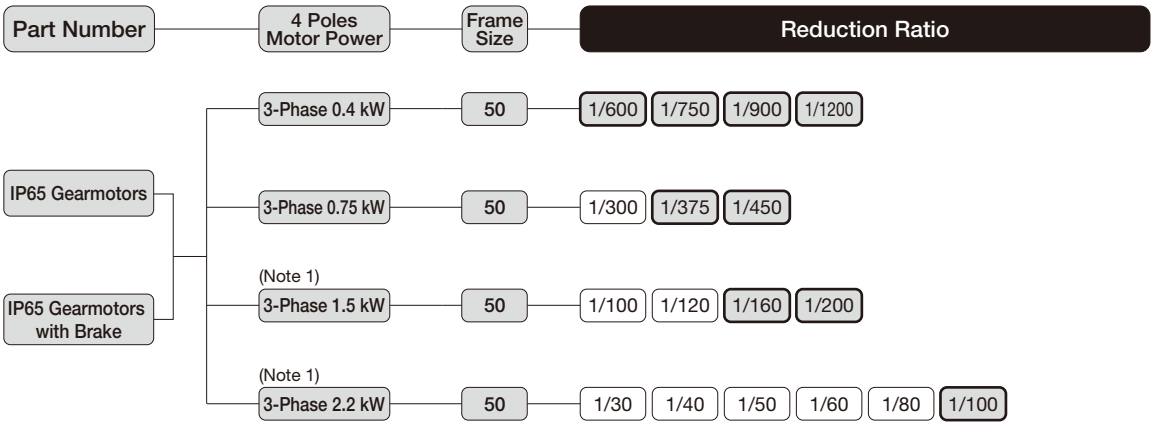

Note 1: IP65 gearmotors with a brake are not available with motor powers of 1.5 kW and 2.2 kW.
Note 2: ▭ indicates a limited torque type. Please make sure to check the allowable output shaft torque in the performance table.

G3 Type Gearmotors with Clutch/Brake MID Series

Part Number	4 Poles Motor Power	Frame Size	Reduction Ratio
Gearmotors with Clutch/Brake	3-Phase 0.1 kW	18	1/5, 1/10, 1/15, 1/20, 1/25, 1/30, 1/40, 1/50
		22	1/60, 1/80, 1/100, 1/120, 1/160, 1/200
	3-Phase 0.2 kW	18	1/5, 1/10, 1/15, 1/20, 1/25
		22	1/30, 1/40, 1/50, 1/60, 1/80, **1/100**
		28	1/100, 1/120, 1/160, 1/200
	3-Phase 0.4 kW	22	1/5, 1/10, 1/15, 1/20, 1/25
		28	1/30, 1/40, 1/50, 1/60, 1/80, **1/100**
		32	1/100, 1/120, 1/160, 1/200
	3-Phase 0.75 kW	28	1/5, 1/10, 1/15, 1/20, 1/25
		32	1/30, 1/40, 1/50, 1/60, 1/80, **1/100**
		40	1/100, 1/120, 1/160, 1/200

Note 1: The G3 Type is available in three types: Foot mount, Flange mount, and Small flange mount.
Please note that mounting type G3K is available only for frame sizes 18 to 32.
Note 2: ▭ indicates a limited torque type. Please make sure to check the allowable output shaft torque in the performance table.

G Type Speed Control Gearmotors MINI Series

Part Number	4 Poles Motor Power	Frame Size	Reduction Ratio
Speed Control Gearmotors	1-Phase 15 W	12	1/5, 1/7.5, 1/10, 1/15, 1/20, 1/25, 1/30, 1/40, 1/50, 1/60, 1/80, 1/100, 1/120, 1/160, 1/200, 1/240
		22	1/300, 1/375, 1/450, 1/600, 1/750, 1/900, 1/1200, 1/1500, 1/1800
	1-Phase 25 W	12	1/5, 1/7.5, 1/10, 1/15, 1/20, 1/25, 1/30, 1/40, 1/50, 1/60, 1/80, 1/100, 1/120
		15	1/160, 1/200, 1/240
		22	1/300, 1/375, 1/450, 1/600, 1/750, 1/900
		28	1/1200, 1/1500, 1/1800
	1-Phase 40 W	15	1/5, 1/7.5, 1/10, 1/15, 1/20, 1/25, 1/30, 1/40, 1/50, 1/60, 1/80, 1/100, 1/120
		18	1/160, 1/200, 1/240
		28	1/300, 1/375, 1/450, 1/600, 1/750, 1/900
		32	1/1200, 1/1500, 1/1800
	1-Phase 60 W	15	1/5, 1/7.5, 1/10, 1/15, 1/20, 1/25, 1/30, 1/40, 1/50, 1/60
		18	1/80, 1/100, 1/120, 1/160, 1/200, 1/240
		28	1/300, 1/375, 1/450, 1/600, 1/750, 1/900
		32	1/1200, 1/1500, 1/1800
	1-Phase 90 W	15	1/5, 1/7.5, 1/10, 1/15, 1/20, 1/25, 1/30
		18	1/40, 1/50, 1/60, 1/80, 1/100, 1/120, 1/160, 1/200, 1/240
		28	1/300, 1/375, 1/450
		32	1/600, 1/750, 1/900
		40	1/1200, 1/1500, 1/1800

Note 1: Please note that mounting type GK is available only for frame sizes 22 to 32.
Note 2: ▭ indicates a limited torque type. Please make sure to check the allowable output shaft torque in the performance table.

G3 Type Gearboxes (Double Shaft Type) MID Series

Part Number	Motor Power Class	Frame Size	Reduction Ratio
Gearboxes (Double Shaft Type)	0.1 kW	18	1/5, 1/10, 1/15, 1/20, 1/25, 1/30, 1/40, 1/50
		22	1/60, 1/80, 1/100, 1/120, 1/160, 1/200
		28	1/300, 1/375, 1/450
		32	1/600, 1/750, **1/900**, **1/1200**
	0.2 kW	18	1/5, 1/10, 1/15, 1/20, 1/25
		22	1/30, 1/40, 1/50, 1/60, 1/80, **1/100**
		28	1/100, 1/120, 1/160, 1/200
		32	1/300, 1/375, 1/450
		40	1/600, **1/750**, **1/900**, **1/1200**
	0.4 kW	22	1/5, 1/10, 1/15, 1/20, 1/25
		28	1/30, 1/40, 1/50, 1/60, 1/80, **1/100**
		32	1/100, 1/120, 1/160, 1/200
		40	1/300, **1/375**, **1/450**
		50	**1/600**, **1/750**, **1/900**, **1/1200**
	0.75 kW	28	1/5, 1/10, 1/15, 1/20, 1/25
		32	1/30, 1/40, 1/50, 1/60, 1/80, **1/100**
		40	1/100, 1/120, 1/160, 1/200
		50	1/300, **1/375**, **1/450**
	1.5 kW	32	1/5, 1/10, 1/15, 1/20, 1/25
		40	1/30, 1/40, 1/50, 1/60, 1/80, **1/100**
		50	1/100, 1/120, **1/160**, **1/200**
	2.2 kW	40	1/5, 1/10, 1/15, 1/20, 1/25
		50	1/30, 1/40, 1/50, 1/60, 1/80, **1/100**

Note 1: The G3 Type is available in three types: Foot mount, Flange mount, and Small flange mount.
Please note that mounting type G3K is available only for frame sizes 18 to 32.
Note 2: ▭ indicates a limited torque type. Please make sure to check the allowable output shaft torque in the performance table.

GA Type Gearboxes (Double Shaft Type) MID Series

Part Number	Motor Power Class	Frame Size	Reduction Ratio
Gearboxes (Double Shaft Type)	0.4 kW	50	1/600, 1/750, 1/900, 1/1200
	0.75 kW	50	1/300, 1/375, 1/450
	1.5 kW	50	1/100, 1/120, 1/160, 1/200
	2.2 kW	50	1/30, 1/40, 1/50, 1/60, 1/80, 1/100

Note 1: ▭ indicates a limited torque type. Please make sure to check the allowable output shaft torque in the performance table.

G3 Type S-Type Gearboxes MID Series

Part Number	Motor Power Class	Frame Size	Reduction Ratio
S-Type Gearboxes	0.1 kW	18	1/5, 1/10, 1/15, 1/20, 1/25, 1/30, 1/40, 1/50
		22	1/60, 1/80, 1/100, 1/120, 1/160, 1/200
		28	1/300, 1/375, 1/450
		32	1/600, 1/750, **1/900**, **1/1200**
	0.2 kW	18	1/5, 1/10, 1/15, 1/20, 1/25
		22	1/30, 1/40, 1/50, 1/60, 1/80, **1/100**
		28	1/100, 1/120, 1/160, 1/200
		32	1/300, 1/375, 1/450
		40	1/600, **1/750**, **1/900**, **1/1200**
	0.4 kW	22	1/5, 1/10, 1/15, 1/20, 1/25
		28	1/30, 1/40, 1/50, 1/60, 1/80, **1/100**
		32	1/100, 1/120, 1/160, 1/200
		40	1/300, **1/375**, **1/450**
		50	**1/600**, **1/750**, **1/900**, **1/1200**
	0.75 kW	28	1/5, 1/10, 1/15, 1/20, 1/25
		32	1/30, 1/40, 1/50, 1/60, 1/80, **1/100**
		40	1/100, 1/120, 1/160, 1/200
		50	1/300, **1/375**, **1/450**
	1.5 kW	32	1/5, 1/10, 1/15, 1/20, 1/25
		40	1/30, 1/40, 1/50, 1/60, 1/80, **1/100**
		50	1/100, 1/120, **1/160**, **1/200**
	2.2 kW	40	1/5, 1/10, 1/15, 1/20, 1/25
		50	1/30, 1/40, 1/50, 1/60, 1/80, **1/100**

Note 1: The G3 Type is available in three types: Foot mount, Flange mount, and Small flange mount.
Please note that mounting type G3K is available only for frame sizes 18 to 32.
Note 2: ▭ indicates a limited torque type. Please make sure to check the allowable output shaft torque in the performance table.

GA Type S-Type Gearboxes MID Series

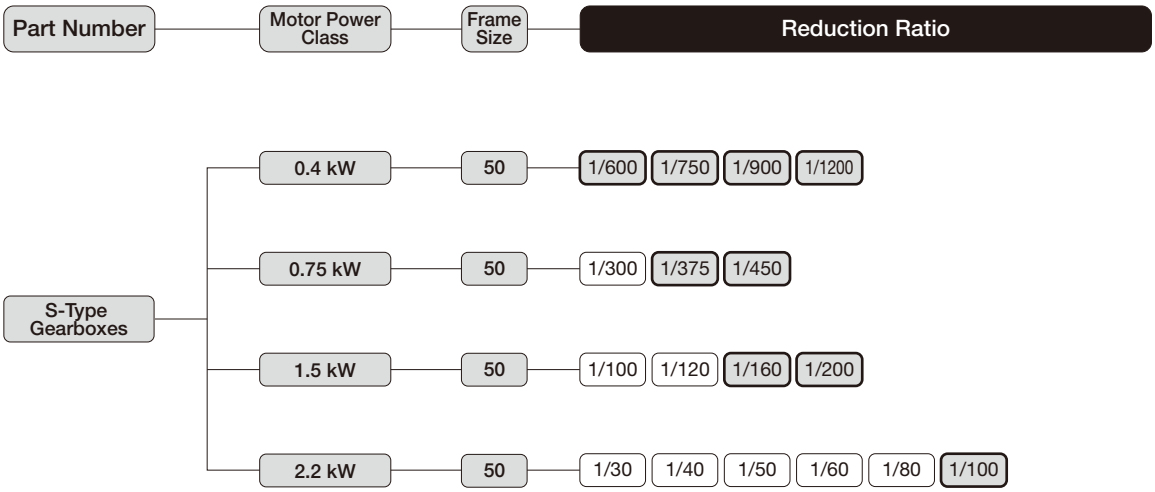

Note 1: ▭ indicates a limited torque type. Please make sure to check the allowable output shaft torque in the performance table.

MEMO

1. Gearmotors
Gearmotors with Brake

1-1. Motor Characteristics Table

G Type 3-Phase Standard Voltage

Series	Power (W)	Voltage (V)	Frequency (Hz)	Frame Size	Rated Current (A)	Rated Speed (r/min)	Startup Current (A)
MINI	15	200/200/220	50/60/60	12	0.14/0.13/0.13	1350/1550/1600	0.30/0.28/0.31
				22	0.14/0.13/0.13	1350/1550/1600	0.30/0.28/0.31
	25	200/200/220	50/60/60	12	0.21/0.19/0.19	1350/1550/1600	0.44/0.42/0.46
				15	0.18/0.17/0.17	1350/1550/1600	0.43/0.41/0.46
				22	0.21/0.19/0.19	1350/1550/1600	0.44/0.42/0.46
				28	0.18/0.17/0.17	1350/1550/1600	0.43/0.41/0.46
	40	200/200/220	50/60/60	12	0.29/0.27/0.27	1350/1550/1600	0.67/0.62/0.68
				15	0.27/0.26/0.26	1350/1550/1550	0.73/0.69/0.76
				18	0.21/0.21/0.21	1350/1550/1600	0.66/0.64/0.70
				22	0.29/0.27/0.27	1350/1550/1600	0.67/0.62/0.68
				28	0.27/0.26/0.26	1350/1550/1550	0.73/0.69/0.76
				32	0.27/0.26/0.26	1350/1550/1550	0.73/0.69/0.76
	60	200/200/220	50/60/60	12	0.42/0.39/0.39	1350/1550/1550	0.94/0.86/1.00
				15	0.40/0.36/0.36	1350/1550/1600	1.04/0.97/1.07
				18	0.33/0.33/0.33	1350/1550/1600	1.06/1.01/1.11
				22	0.42/0.39/0.39	1350/1550/1550	0.94/0.86/1.00
				28	0.40/0.36/0.36	1350/1550/1600	1.04/0.97/1.07
				32	0.40/0.36/0.36	1350/1550/1600	1.04/0.97/1.07
	90	200/200/220	50/60/60	15	0.51/0.48/0.48	1350/1550/1550	1.42/1.36/1.49
				18	0.47/0.47/0.47	1350/1550/1600	1.59/1.51/1.66
				28	0.51/0.48/0.48	1350/1550/1550	1.42/1.36/1.49
				32	0.51/0.48/0.48	1350/1550/1550	1.42/1.36/1.49
				40	0.47/0.47/0.47	1350/1550/1600	1.59/1.51/1.66

G Type 3-Phase High Voltage (400 V Class)

Series	Power (W)	Voltage (V)	Frequency (Hz)	Frame Size	Rated Current (A)	Rated Speed (r/min)	Startup Current (A)
MINI	15	380/400/400/440	50/50/60/60	12	0.11/0.12/0.10/0.11	1400/1400/1700/1700	0.26/0.28/0.26/0.29
				22	0.11/0.12/0.10/0.11	1400/1400/1700/1700	0.26/0.28/0.26/0.29
	25	380/400/400/440	50/50/60/60	12	0.11/0.12/0.11/0.12	1350/1400/1600/1650	0.26/0.28/0.26/0.29
				15	0.09/0.09/0.09/0.09	1300/1350/1550/1600	0.20/0.21/0.20/0.22
				22	0.11/0.12/0.11/0.12	1350/1400/1600/1650	0.26/0.28/0.26/0.29
				28	0.09/0.09/0.09/0.09	1300/1350/1550/1600	0.20/0.21/0.20/0.22
	40	380/400/400/440	50/50/60/60	12	0.14/0.14/0.14/0.14	1300/1350/1550/1600	0.30/0.32/0.30/0.33
				15	0.13/0.14/0.13/0.14	1300/1350/1550/1600	0.33/0.35/0.33/0.37
				18	0.10/0.10/0.10/0.10	1350/1400/1600/1650	0.31/0.34/0.32/0.35
				22	0.14/0.14/0.14/0.14	1300/1350/1550/1600	0.30/0.32/0.30/0.33
				28	0.13/0.14/0.13/0.14	1300/1350/1550/1600	0.33/0.35/0.33/0.37
				32	0.13/0.14/0.13/0.14	1300/1350/1550/1600	0.33/0.35/0.33/0.37
	60	380/400/400/440	50/50/60/60	15	0.17/0.17/0.17/0.17	1300/1350/1550/1600	0.43/0.45/0.43/0.47
				18	0.16/0.16/0.16/0.16	1350/1400/1600/1650	0.48/0.51/0.49/0.54
				22	0.20/0.20/0.20/0.20	1250/1300/1500/1550	0.38/0.40/0.38/0.41
				28	0.17/0.17/0.17/0.17	1300/1350/1550/1600	0.43/0.45/0.43/0.47
				32	0.17/0.17/0.17/0.17	1300/1350/1550/1600	0.43/0.45/0.43/0.47
	90	380/400/400/440	50/50/60/60	15	0.26/0.26/0.26/0.26	1300/1350/1550/1600	0.70/0.74/0.69/0.77
				18	0.23/0.23/0.24/0.24	1350/1350/1600/1650	0.73/0.78/0.74/0.81
				28	0.26/0.26/0.26/0.26	1300/1350/1550/1600	0.70/0.74/0.69/0.77
				32	0.26/0.26/0.26/0.26	1300/1350/1550/1600	0.70/0.74/0.69/0.77
				40	0.23/0.23/0.24/0.24	1350/1350/1600/1650	0.73/0.78/0.74/0.81

The rated current in the motor characteristics table is the current data for the motor operating without a gearbox.
With regard to gearmotors with a brake, it is necessary to consider the current value flowing through the brake as needed.
For more details, please contact your nearest Sales Office or the CS Center.

G Type 1-Phase Standard Voltage

Series	Power (W)	Voltage (V)	Frequency (Hz)	Frame Size	Rated Current (A)	Rated Speed (r/min)	Startup Current (A)	Capacitor (μF)
MINI	15	100/100	50/60	12	0.39/0.35	1350/1650	0.72/0.67	5
				22	0.39/0.35	1350/1650	0.72/0.67	5
	25	100/100	50/60	12	0.48/0.48	1350/1600	0.86/0.80	7
				15	0.44/0.45	1350/1650	1.00/0.92	7
				22	0.48/0.48	1350/1600	0.86/0.80	7
				28	0.44/0.45	1350/1650	1.00/0.92	7
	40	100/100	50/60	12	0.67/0.80	1400/1650	1.26/1.23	12
				15	0.61/0.66	1350/1650	1.43/1.36	10
				18	0.63/0.64	1400/1650	2.16/2.00	10
				22	0.67/0.80	1400/1650	1.26/1.23	12
				28	0.61/0.66	1350/1650	1.43/1.36	10
				32	0.61/0.66	1350/1650	1.43/1.36	10
	60	100/100	50/60	15	0.90/1.00	1350/1600	2.11/1.98	15
				18	0.90/1.00	1400/1650	2.55/2.37	15
				22	0.90/1.10	1300/1500	1.33/1.34	15
				28	0.90/1.00	1350/1600	2.11/1.98	15
				32	0.90/1.00	1350/1600	2.11/1.98	15
	90	100/100	50/60	15	1.30/1.40	1350/1600	2.89/2.68	20
				18	1.20/1.40	1350/1600	3.27/3.04	20
				28	1.30/1.40	1350/1600	2.89/2.68	20
				32	1.30/1.40	1350/1600	2.89/2.68	20
				40	1.20/1.40	1350/1600	3.27/3.04	20

G Type 1-Phase High Voltage (200 V Class)

Series	Power (W)	Voltage (V)	Frequency (Hz)	Frame Size	Rated Current (A)	Rated Speed (r/min)	Startup Current (A)	Capacitor (μF)
MINI	15	200/200	50/60	12	0.21/0.19	1350/1650	0.35/0.33	1.2
				22	0.21/0.19	1350/1650	0.35/0.33	1.2
	25	200/200	50/60	12	0.26/0.25	1350/1600	0.47/0.44	1.7
				15	0.23/0.24	1350/1650	0.46/0.45	1.7
				22	0.26/0.25	1350/1600	0.47/0.44	1.7
				28	0.23/0.24	1350/1650	0.46/0.45	1.7
	40	200/200	50/60	12	0.34/0.33	1350/1600	0.66/0.60	2.5
				15	0.29/0.34	1350/1600	0.64/0.61	2.5
				18	0.31/0.32	1400/1650	0.98/0.92	2.5
				22	0.34/0.33	1350/1600	0.66/0.60	2.5
				28	0.29/0.34	1350/1600	0.64/0.61	2.5
				32	0.29/0.34	1350/1600	0.64/0.61	2.5
	60	200/200	50/60	15	0.45/0.48	1350/1600	1.06/1.00	3.5
				18	0.42/0.45	1400/1650	1.29/1.22	3.5
				22	0.43/0.50	1300/1500	0.67/0.64	3.5
				28	0.45/0.48	1350/1600	1.06/1.00	3.5
				32	0.45/0.48	1350/1600	1.06/1.00	3.5
	90	200/200	50/60	15	0.65/0.66	1350/1600	1.44/1.35	5
				18	0.59/0.65	1400/1650	1.67/1.58	5
				28	0.65/0.66	1350/1600	1.44/1.35	5
				32	0.65/0.66	1350/1600	1.44/1.35	5
				40	0.59/0.65	1400/1650	1.67/1.58	5

The rated current in the motor characteristics table is the current data for the motor operating without a gearbox.
With regard to gearmotors with a brake, it is necessary to consider the current value flowing through the brake as needed.
For more details, please contact your nearest Sales Office or the CS Center.

G Type 3-Phase Standard Voltage/High Voltage (400 V Class)/Special Voltage

Series	Power	Power Supply/ Certification Codes	Voltage (V)	Frequency (Hz)	Rated Current (A)	Startup Current (A)	Rated Speed (r/min)
MID	0.1kW	NN	200/200/220	50/60/60	0.61/0.54/0.54	2.39/2.27/2.52	1410/1690/1710
		WN	380/400/400/440	50/50/60/60	0.31/0.31/0.28/0.28	1.12/1.18/1.12/1.22	1400/1410/1690/1720
		KN	220/380	60/60	0.52/0.30	1.90/1.10	1680/1680
		CN	220/230/380	50/50/50	0.55/0.54/0.31	1.94/2.03/1.12	1400/1410/1400
		DN	220/220/380/380	50/60/50/60	0.55/0.52/0.31/0.30	1.94/1.90/1.12/1.10	1400/1680/1400/1680
		EN	415/440/480	50/50/60	0.30/0.29/0.26	1.06/1.12/1.17	1390/1420/1720
		AN	208/230/460/400	60/60/60/50	0.54/0.57/0.29/0.31	2.35/2.62/1.26/1.21	1690/1730/1730/1410
		MA	575	60	0.20	0.87	1700
	0.2kW IE2	NN	200/200/220	50/60/60	1.1/1.0/1.0	4.70/4.35/4.85	1400/1680/1700
		WN	380/400/400/440	50/50/60/60	0.56/0.56/0.50/0.50	2.29/2.38/2.29/2.48	1390/1400/1680/1710
		KN	220/380	60/60	0.93/0.52	3.70/2.20	1680/1680
		CN	220/230/380	50/50/50	0.99/0.98/0.56	3.97/4.15/2.29	1400/1410/1390
		DN	220/220/380/380	50/60/50/60	0.99/0.93/0.56/0.52	3.97/3.70/2.29/2.20	1400/1680/1390/1680
		EN	415/440/480	50/50/60	0.50/0.50/0.45	1.75/1.86/2.00	1370/1400/1700
		AN	208/230/460/400	60/60/60/50	1.0/1.0/0.50/0.56	4.78/5.16/2.56/2.44	1680/1720/1720/1400
		MA	575	60	0.40	1.78	1710
	0.4kW IE2	NN	200/200/220	50/60/60	2.1/1.8/1.8	9.60/8.54/9.21	1400/1680/1700
		WN	380/400/400/440	50/50/60/60	1.0/1.0/0.9/0.9	4.43/4.64/4.24/4.85	1390/1400/1680/1710
		KN	220/380	60/60	1.7/1.0	7.10/4.09	1670/1670
		CN	220/230/380	50/50/50	1.8/1.8/1.0	7.63/8.04/4.43	1390/1400/1390
		DN	220/220/380/380	50/60/50/60	1.8/1.7/1.0/1.0	7.63/7.10/4.43/4.09	1390/1670/1390/1670
		EN	415/440/480	50/50/60	0.96/0.95/0.82	4.45/4.56/4.52	1390/1410/1680
		AN	208/230/460/400	60/60/60/50	1.8/1.8/0.9/1.0	9.21/9.82/5.06/4.62	1680/1720/1720/1400
		MA	575	60	0.68	3.94	1700
	0.75kW IE3	NN	200/200/220	50/60/60	3.5/3.2/3.1	21.8/19.0/21.1	1450/1740/1750
		WN	380/400/400/440	50/50/60/60	1.73/1.72/1.58/1.54	10.2/10.8/9.8/10.7	1440/1450/1740/1750
		KN	220/380	60/60	2.9/1.7	16.9/9.8	1740/1740
		CN	220/230/380	50/50/50	3.0/3.0/1.7	17.8/18.7/10.3	1450/1450/1440
		DN	220/220/380/380	50/60/50/60	3.1/2.9/1.8/1.7	19.3/16.9/11.2/9.8	1450/1740/1450/1740
		EN	415/440/480	50/50/60	1.54/1.52/1.36	8.6/9.3/9.0	1440/1450/1750
		UN	230/460/400	60/60/50	3.1/1.5/1.7	22.3/11.2/10.8	1760/1760/1450
		MA	575	60	1.16	7.2	1750
	1.5kW IE3	NN	200/200/220	50/60/60	6.7/6.1/5.9	45.6/40.3/45.1	1450/1740/1760
		WN	380/400/400/440	50/50/60/60	3.4/3.4/3.1/3.0	21.9/23.2/20.4/22.8	1450/1450/1750/1760
		KN	220/380	60/60	5.9/3.4	45.1/25.8	1760/1760
		CN	220/230/380	50/50/50	5.9/5.9/3.4	38.5/40.4/22.1	1450/1450/1450
		EN	415/440/480	50/50/60	3.1/3.1/2.8	20.8/22.2/21.2	1450/1460/1760
		UN	230/460/400	60/60/50	5.9/2.9/3.3	44.9/22.6/23.2	1760/1760/1450
		MA	575	60	2.2	17.0	1760
	2.2kW IE3	NN	200/200/220	50/60/60	9.3/8.6/8.2	70.3/56.9/63.7	1470/1760/1770
		WN	380/400/400/440	50/50/60/60	4.5/4.4/4.2/3.9	30.0/32.0/25.0/28.0	1440/1450/1740/1750
		KN	220/380	60/60	8.3/4.8	65.0/38.0	1770/1770
		CN	220/230/380	50/50/50	7.9/7.7/4.5	52.0/54.3/30.0	1460/1470/1440
		EN	415/440/480	50/50/60	4.3/4.3/3.8	33.1/35.5/29.8	1460/1470/1770
		UN	230/460/400	60/60/50	7.9/4.0/4.5	65.2/34.8/36.3	1770/1770/1470
		MA	575	60	3.3	24.4	1760

The rated current in the motor characteristics table is the current data for the motor operating without a gearbox.
With regard to gearmotors with a brake, it is necessary to consider the current value flowing through the brake as needed.
For more details, please contact your nearest Sales Office or the CS Center.

GA Type 3-Phase Standard Voltage/High Voltage (400 V Class)/Special Voltage

Series	Power	Power Supply/ Certification Codes	Voltage (V)	Frequency (Hz)	Rated Current (A)	Startup Current (A)	Rated Speed (r/min)
	0.4kW IE2	NN	200/200/220	50/60/60	2.1/1.8/1.8	9.60/8.54/9.21	1400/1680/1700
		WN	380/400/400/440	50/50/60/60	1.0/1.0/0.9/0.9	4.43/4.64/4.24/4.85	1390/1400/1680/1710
		KN	220/380	60/60	1.7/1.0	7.10/4.09	1670/1670
		CN	220/230/380	50/50/50	1.8/1.8/1.0	7.63/8.04/4.43	1390/1400/1390
		DN	220/220/380/380	50/60/50/60	1.8/1.7/1.0/1.0	7.63/7.10/4.43/4.09	1390/1670/1390/1670
		EN	415/440/480	50/50/60	0.96/0.95/0.82	4.45/4.56/4.52	1390/1410/1680
		AN	208/230/460/400	60/60/60/50	1.8/1.8/0.9/1.0	9.21/9.82/5.06/4.62	1680/1720/1720/1400
		MA	575	60	0.68	3.94	1700
	0.75kW IE3	NN	200/200/220	50/60/60	3.5/3.2/3.1	21.8/19.0/21.1	1450/1740/1750
		WN	380/400/400/440	50/50/60/60	1.73/1.72/1.58/1.54	10.2/10.8/9.8/10.7	1440/1450/1740/1750
		KN	220/380	60/60	2.9/1.7	16.9/9.8	1740/1740
		CN	220/230/380	50/50/50	3.0/3.0/1.7	17.8/18.7/10.3	1450/1450/1440
		DN	220/220/380/380	50/60/50/60	3.1/2.9/1.8/1.7	19.3/16.9/11.2/9.8	1450/1740/1450/1740
		EN	415/440/480	50/50/60	1.54/1.52/1.36	8.6/9.3/9.0	1440/1450/1750
		UN	230/460/400	60/60/50	3.1/1.5/1.7	22.3/11.2/10.8	1760/1760/1450
		MA	575	60	1.16	7.2	1750
	1.5kW IE3	NN	200/200/220	50/60/60	6.7/6.1/5.9	45.6/40.3/45.1	1450/1740/1760
		WN	380/400/400/440	50/50/60/60	3.4/3.4/3.1/3.0	21.9/23.2/20.4/22.8	1450/1450/1750/1760
		KN	220/380	60/60	5.9/3.4	45.1/25.8	1760/1760
		CN	220/230/380	50/50/50	5.9/5.9/3.4	38.5/40.4/22.1	1450/1450/1450
		EN	415/440/480	50/50/60	3.1/3.1/2.8	20.8/22.2/21.2	1450/1460/1760
		UN	230/460/400	60/60/50	5.9/2.9/3.3	44.9/22.6/23.2	1760/1760/1450
		MA	575	60	2.2	17.0	1760
	2.2kW IE3	NN	200/200/220	50/60/60	9.3/8.6/8.2	70.3/56.9/63.7	1470/1760/1770
		WN	380/400/400/440	50/50/60/60	4.5/4.4/4.2/3.9	30.0/32.0/25.0/28.0	1440/1450/1740/1750
		KN	220/380	60/60	8.3/4.8	65.0/38.0	1770/1770
		CN	220/230/380	50/50/50	7.9/7.7/4.5	52.0/54.3/30.0	1460/1470/1440
		EN	415/440/480	50/50/60	4.3/4.3/3.8	33.1/35.5/29.8	1460/1470/1770
		UN	230/460/400	60/60/50	7.9/4.0/4.5	65.2/34.8/36.3	1770/1770/1470
		MA	575	60	3.3	24.4	1760

The rated current in the motor characteristics table is the current data for the motor operating without a gearbox.
With regard to gearmotors with a brake, it is necessary to consider the current value flowing through the brake as needed.
For more details, please contact your nearest Sales Office or the CS Center.

G3 Type 1-Phase Standard Voltage

Series	Power	Startup Method	Voltage (V)	Frequency (Hz)	Rated Current (A)	Startup Current (A)	Rated Speed (r/min)	Startup Torque (%)	Breakdown Torque (%)
MID	0.1 kW	Capacitor Start	100/100	50/60	2.7/2.4	10.5/10.5	1420/1710	220/204	188/184
	0.2 kW	Capacitor Start	100/100	50/60	5.1/4.5	20.0/20.0	1420/1700	276/294	194/187
	0.4 kW	Capacitor Start	100/100	50/60	8.7/7.9	32.0/32.0	1440/1730	210/205	189/178

The rated current in the motor characteristics table is the current data for the motor operating without a gearbox.
With regard to gearmotors with a brake, it is necessary to consider the current value flowing through the brake as needed.
For more details, please contact your nearest Sales Office or the CS Center.

G3 Type 1-Phase High Voltage (200 V Class)

Series	Power	Startup Method	Voltage (V)	Frequency (Hz)	Rated Current (A)	Startup Current (A)	Rated Speed (r/min)	Startup Torque (%)	Breakdown Torque (%)
MID	0.1 kW	Capacitor Start	200/200	50/60	1.3/1.2	5.4/5.4	1420/1710	222/200	194/182
	0.2 kW	Capacitor Start	200/200	50/60	2.5/2.2	10.0/10.0	1420/1700	254/250	203/205
	0.4 kW	Capacitor Start	200/200	50/60	4.3/3.9	19.0/18.9	1440/1730	181/190	240/217

The rated current in the motor characteristics table is the current data for the motor operating without a gearbox.
With regard to gearmotors with a brake, it is necessary to consider the current value flowing through the brake as needed.
For more details, please contact your nearest Sales Office or the CS Center.

GA Type 1-Phase Standard Voltage

Series	Power	Startup Method	Voltage (V)	Frequency (Hz)	Rated Current (A)	Startup Current (A)	Rated Speed (r/min)	Startup Torque (%)	Breakdown Torque (%)
MID	0.4 kW	Capacitor Start	100/100	50/60	8.7/7.9	32.0/32.0	1440/1730	210/205	189/178

The rated current in the motor characteristics table is the current data for the motor operating without a gearbox.
With regard to gearmotors with a brake, it is necessary to consider the current value flowing through the brake as needed.
For more details, please contact your nearest Sales Office or the CS Center.

GA Type 1-Phase High Voltage (200 V Class)

Series	Power	Startup Method	Voltage (V)	Frequency (Hz)	Rated Current (A)	Startup Current (A)	Rated Speed (r/min)	Startup Torque (%)	Breakdown Torque (%)
MID	0.4 kW	Capacitor Start	200/200	50/60	4.3/3.9	19.0/18.9	1440/1730	181/190	240/217

The rated current in the motor characteristics table is the current data for the motor operating without a gearbox.
With regard to gearmotors with a brake, it is necessary to consider the current value flowing through the brake as needed.
For more details, please contact your nearest Sales Office or the CS Center.

1-2. Performance Table

G Type Gearmotors/Gearmotors with Brake

[Notes]
- The values in parentheses ( ) in the drawings are the indications for gearmotors with brake.
- The output shaft speed is the value relative to the synchronous speed of the motor and the reduction ratio.
- Allowable output shaft O.H.L. is the value at the middle of the output shaft.
- In the performance table, the reduction ratio in ▭ indicates that when the connection is made as shown on page 546 (CW), the direction of rotation is clockwise in the case of a three-phase motor or counterclockwise in the case of a single-phase motor when viewed from the output shaft side. (Refer to the figure on the right)
- The "*" mark indicates a limited torque type. Please make sure to check the allowable output shaft torque in the performance table.

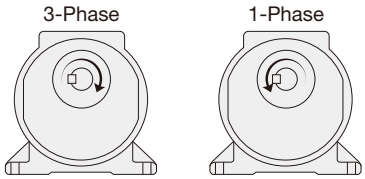

Series	Motor Power	Frame Size	Reduction Ratio	Actual Reduction Ratio	Output Shaft Speed r/min 50 Hz	Output Shaft Speed r/min 60 Hz	Allowable Output Shaft Torque N·m	Allowable Output Shaft O.H.L. N	Drawings Foot Mount	Drawings Flange Mount	Drawings Small Flange Mount
MINI	15 W	12	1/5	1/5	300	360	0.29	98	P.83	P.104	-
			1/7.5	1/7.5	200	240	0.49	196			
			1/10	1/10	150	180	0.69	245			
			1/15	1/15	100	120	0.98	343			
			1/20	1/20	75	90	1.27	441			
			1/25	1/25	60	72	1.67	490			
			1/30	1/29	50	60	1.96	539			
			1/40	1/40	37.5	45	2.65	588			
			1/50	1/50	30	36	3.33	637			
			1/60	1/58	25	30	3.92	686			
			1/80	1/80	18.8	22.5	5.00	735			
			1/100	1/100	15	18	6.27	735			
			1/120	1/120	12.5	15	7.45	784			
			1/160	1/160	9.4	11.2	9.80	784			
			1/200	1/200	7.5	9	12.7	784			
			1/240	1/232	6.3	7.5	14.7	784			
		22	1/300	91/27000	5	6	16.7	1760	P.88	P.109	P.124
			1/375	11/4050	4	4.8	20.6	1760			
			1/450	637/297000	3.3	4	25.5	1760			
			1/600	91/54000	2.5	3	33.3	1760			
			1/750	11/8100	2	2.4	42.1	1760			
			1/900	637/594000	1.7	2	50.0	1760			
			1/1200	91/104400	1.3	1.5	66.6	1760			
			1/1500	11/15660	1	1.2	83.3	1760			
			1/1800	637/1148400	0.8	1	98.0	1760			
	25 W	12	1/5	1/5	300	360	0.59	98	P.83	P.104	-
			1/7.5	1/7.5	200	240	0.78	196			
			1/10	1/10	150	180	1.08	245			
			1/15	1/15	100	120	1.67	343			
			1/20	1/20	75	90	2.25	441			
			1/25	1/25	60	72	2.74	490			
			1/30	1/29	50	60	3.33	539			
			1/40	1/40	37.5	45	4.41	588			
			1/50	1/50	30	36	5.49	637			
			1/60	1/58	25	30	6.66	686			
			1/80	1/80	18.8	22.5	8.43	735			
			1/100	1/100	15	18	10.8	735			
			1/120	1/120	12.5	15	12.7	784			
		15	1/160	1/160	9.4	11.2	16.7	1080	P.84	P.105	-
			1/200	1/200	7.5	9	20.6	1080			
			1/240	1/232	6.3	7.5	25.5	1080			
		22	1/300	91/27000	5	6	28.4	1760	P.88	P.109	P.124
			1/375	11/4050	4	4.8	35.3	1760			
			1/450	637/297000	3.3	4	42.1	1760			
			1/600	91/54000	2.5	3	55.9	1760			
			1/750	11/8100	2	2.4	69.6	1760			
			1/900	637/594000	1.7	2	84.3	1760			
		28	1/1200	221/249690	1.3	1.5	108	2740	P.91	P.112	P.127
			1/1500	187/261870	1	1.2	137	2740			
			1/1800	169/285360	0.8	1	167	2740			

Series	Motor Power	Frame Size	Reduction Ratio	Actual Reduction Ratio	Output Shaft Speed r/min 50 Hz	Output Shaft Speed r/min 60 Hz	Allowable Output Shaft Torque N·m	Allowable Output Shaft O.H.L. N	Drawings Foot Mount	Drawings Flange Mount	Drawings Small Flange Mount
MINI	40 W	12	1/5	1/5	300	360	0.88	98	P.83	P.104	-
			1/7.5	1/7.5	200	240	1.37	196			
			1/10	1/10	150	180	1.76	245			
			1/15	1/15	100	120	2.65	343			
			1/20	1/20	75	90	3.53	441			
			1/25	1/25	60	72	4.41	490			
			1/30	1/29	50	60	5.29	539			
			1/40	1/40	37.5	45	7.06	588			
			1/50	1/50	30	36	8.82	637			
			1/60	1/58	25	30	10.8	686			
		15	1/80	1/80	18.8	22.5	13.7	980	P.84	P.105	-
			1/100	1/100	15	18	16.7	980			
			1/120	1/120	12.5	15	20.6	1080			
		18	1/160	1/160	9.4	11.2	26.5	1370	P.85	P.106	-
			1/200	1/200	7.5	9	33.3	1370			
			1/240	1/240	6.3	7.5	40.2	1370			
		22	1/300	91/27000	5	6	45.1	1760	P.88	P.109	P.124
			1/375	11/4050	4	4.8	55.9	1760			
			1/450	637/297000	3.3	4	67.6	1760			
		28	1/600	221/129150	2.5	3	90.2	2740	P.91	P.112	P.127
			1/750	187/135450	2	2.4	118	2740			
			1/900	169/147600	1.7	2	137	2740			
		32	1/1200	13/14964	1.3	1.5	176	5100	P.94	P.115	P.130
			1/1500	11/15660	1	1.2	225	5100			
			1/1800	13/22446	0.8	1	274	5100			
	60 W	12 (Note 1)	1/5	1/5	300	360	1.37	98	P.83	P.104	-
			1/7.5	1/7.5	200	240	2.06	196			
			1/10	1/10	150	180	2.74	245			
			1/15	1/15	100	120	4.12	343			
			1/20	1/20	75	90	5.49	441			
			1/25	1/25	60	72	6.96	490			
			1/30	1/29	50	60	8.33	539			
		15 (Note 1)	1/5	1/5	300	360	1.37	98	P.84	P.105	-
			1/7.5	1/7.5	200	240	2.06	196			
			1/10	1/10	150	180	2.74	245			
			1/15	1/15	100	120	4.12	343			
			1/20	1/20	75	90	5.49	441			
			1/25	1/25	60	72	6.96	490			
			1/30	1/29	50	60	8.33	539			
		15	1/40	1/40	37.5	45	10.8	784			
			1/50	1/50	30	36	13.7	882			
			1/60	1/58	25	30	16.7	882			
		18	1/80	1/80	18.8	22.5	20.6	1270	P.85	P.106	-
			1/100	1/100	15	18	26.5	1270			
			1/120	1/120	12.5	15	31.4	1370			
			1/160	1/160	9.4	11.2	42.1	1370			
			1/200	1/200	7.5	9	52.9	1370			
			* 1/240	1/240	6.3	7.5	53.9	1370			
		22	1/300	91/27000	5	6	70.6	1760	P.88	P.109	P.124
			1/375	11/4050	4	4.8	88.2	1760			
			1/450	637/297000	3.3	4	108	1760			
		28	1/600	221/129150	2.5	3	137	2740	P.91	P.112	P.127
			1/750	187/135450	2	2.4	176	2740			
			1/900	169/147600	1.7	2	216	2740			
		32	1/1200	13/14964	1.3	1.5	284	5100	P.94	P.115	P.130
			1/1500	11/15660	1	1.2	353	5100			
			1/1800	13/22446	0.8	1	421	5100			

Note 1: Please note that with regard to reduction ratios of 1/5 to 1/30 of 60 W gearmotors, the frame size for Three-phase standard voltages (200 V class) is 12, but the frame size for Three-phase high voltage (400 V class) and Single-phase voltages is 15.

1-2. Performance Table

Series	Motor Power	Frame Size	Reduction Ratio	Actual Reduction Ratio	Output Shaft Speed r/min 50 Hz	Output Shaft Speed r/min 60 Hz	Allowable Output Shaft Torque N·m	Allowable Output Shaft O.H.L. N	Drawings Foot Mount	Drawings Flange Mount	Drawings Small Flange Mount
MINI	90 W	15	1/5	1/5	300	360	2.06	147	P.84	P.105	-
			1/7.5	1/7.5	200	240	3.14	245			
			1/10	1/10	150	180	4.12	343			
			1/15	1/15	100	120	6.17	441			
			1/20	1/20	75	90	8.33	539			
			1/25	1/25	60	72	10.8	588			
			1/30	1/29	50	60	12.7	686			
		18	1/40	1/40	37.5	45	16.7	1080	P.85	P.106	-
			1/50	1/50	30	36	20.6	1180			
			1/60	1/60	25	30	24.5	1180			
			1/80	1/80	18.8	22.5	31.4	1270			
			1/100	1/100	15	18	39.2	1270			
			1/120	1/120	12.5	15	47.0	1370			
			* 1/160	1/160	9.4	11.2	53.9	1370			
			* 1/200	1/200	7.5	9	53.9	1370			
			* 1/240	1/240	6.3	7.5	53.9	1370			
		28	1/300	221/64575	5	6	108	2740	P.91	P.112	P.127
			1/375	187/67725	4	4.8	137	2740			
			1/450	169/73800	3.3	4	157	2740			
		32	1/600	13/7740	2.5	3	216	5100	P.94	P.115	P.130
			1/750	11/8100	2	2.4	265	5100			
			1/900	13/11610	1.7	2	314	5100			
		40	1/1200	13/14964	1.3	1.5	421	7060	P.97	P.118	-
			1/1500	11/15660	1	1.2	529	7060			
			1/1800	13/22443	0.8	1	637	7060			

Note 1: Please be sure to read the notes on page 73.

G3 Type Gearmotors/Gearmotors with Brake

[Notes]
- The values in parentheses ( ) in the drawings are the indications for gearmotors with brake.
- The output shaft speed is the value relative to the synchronous speed of the motor and the reduction ratio.
- ▭ in the performance table indicates that the shaft rotates clockwise when viewed from the output shaft side when the connection is made as shown on page 547 (CW). (Refer to the figure on the right)
- Allowable output shaft O.H.L. is the value at the middle of the output shaft.
- The "*" mark indicates a limited torque type. Please make sure to check the allowable output shaft torque in the performance table.

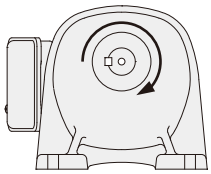

Series	Motor Power	Frame Size	Reduction Ratio	Actual Reduction Ratio	Output Shaft Speed r/min 50 Hz	Output Shaft Speed r/min 60 Hz	Allowable Output Shaft Torque N·m 50 Hz	Allowable Output Shaft Torque N·m 60 Hz	Allowable Output Shaft O.H.L. N	Drawings Foot Mount	Drawings Flange Mount	Drawings Small Flange Mount
MID	3-Phase 0.1 kW	18	1/5	33/164	300	360	3	2.5	770	P.86	P.107	P.122
			1/10	77/779	150	180	6.1	5	1140			
			1/15	119/1804	100	120	9.1	7.5	1270			
			1/20	49/984	75	90	12	9.8	1530			
			1/25	28/697	60	72	15	12.7	1650			
			1/30	35/1066	50	60	19	14.7	1780			
			1/40	35/1404	37.5	45	24	19.6	1910			
			1/50	7/351	30	36	29	24.5	2040			
		22	1/60	11/684	25	30	35	29.4	2800	P.89	P.110	P.125
			1/80	21/1634	18.8	22.5	47	39.2	3180			
			1/100	7/684	15	18	59	49	3180			
			1/120	147/17974	12.5	15	71	58.8	3180			
			1/160	21/3268	9.4	11.2	94	78.4	3180			
			1/200	21/4085	7.5	9	117	98	3180			
		28	1/300	221/65190	5	6	157	130	3430	P.92	P.113	P.128
			1/375	187/68370	4	4.8	196	163	3430			
			1/450	1183/521520	3.3	4	235	196	3430			
		32	1/600	147/88192	2.5	3	313	261	5880	P.95	P.116	P.131
			1/750	49/36464	2	2.4	391	326	5880			
			* 1/900	62/57063	1.7	2	431	391	5880			
			* 1/1200	46/55195	1.3	1.5	431	431	5880			
	3-Phase 0.2 kW	18	1/5	33/164	300	360	6.1	5	770	P.86	P.107	P.122
			1/10	77/779	150	180	11.8	9.8	1140			
			1/15	119/1804	100	120	18.6	14.7	1270			
			1/20	49/984	75	90	24.5	20.6	1450			
			1/25	28/697	60	72	30.4	25.5	1550			
		22	1/30	7/216	50	60	36.3	30.4	2280	P.89	P.110	P.125
			1/40	91/3600	37.5	45	47	39.2	2410			
			1/50	11/540	30	36	58.8	49	2540			
			1/60	637/39600	25	30	70.6	58.8	2800			
			1/80	91/7200	18.8	22.5	94.1	78.4	3000			
			* 1/100	11/1080	15	18	97	80.4	3180			
		28	1/100	13/1353	15	18	117	98	3690	P.92	P.113	P.128
			1/120	91/11000	12.5	15	140	117	4320			
			1/160	1/165	9.4	11.2	187	156	4450			
			1/200	7/1375	7.5	9	234	195	4450			
		32	1/300	91/27348	5	6	313	261	5880	P.95	P.116	P.131
			1/375	77/28620	4	4.8	391	326	5880			
			1/450	91/41022	3.3	4	431	391	5880			
		40	1/600	9/5300	2.5	3	626	521	7060	P.98	P.119	-
			* 1/750	62/46427	2	2.4	764	653	7060			
			* 1/900	23/21259	1.7	2	764	764	7060			
			* 1/1200	9/10600	1.3	1.5	764	764	7060			

1-2. Performance Table

Series	Motor Power	Frame Size	Reduction Ratio	Actual Reduction Ratio	Output Shaft Speed r/min 50 Hz	Output Shaft Speed r/min 60 Hz	Allowable Output Shaft Torque N·m 50 Hz	Allowable Output Shaft Torque N·m 60 Hz	Allowable Output Shaft O.H.L. N	Drawings Foot Mount	Drawings Flange Mount	Drawings Small Flange Mount
MID	3-Phase 0.4 kW	22	1/5	7/34	300	360	12	10	1140	P.89	P.110	P.125
			1/10	7/68	150	180	25	21	1530			
			1/15	49/748	100	120	36	30	1780			
			1/20	7/136	75	90	48	40	1910			
			1/25	7/170	60	72	61	50	2050			
		28	1/30	1/30	50	60	73	61	3310	P.92	P.113	P.128
			1/40	221/8610	37.5	45	94	78	3690			
			1/50	187/9030	30	36	117	98	4080			
			1/60	169/9840	25	30	140	117	4450			
			1/80	65/5166	18.8	22.5	187	156	4450			
			* 1/100	55/5418	15	18	193	161	4450			
		32	1/100	7/688	15	18	234	195	6370	P.95	P.116	P.131
			1/120	77/9360	12.5	15	281	234	7640			
			1/160	21/3328	9.4	11.2	374	313	7640			
			1/200	189/38272	7.5	9	431	390	7640			
		40	1/300	7/2160	5	6	626	521	7060	P.98	P.119	-
			* 1/375	77/29328	4	4.8	764	653	7060			
			* 1/450	49/21600	3.3	4	764	764	7060			
		50	* 1/600	57/35360	2.5	3	1225	1044	9800	P.100	P.121	-
			* 1/750	25/19448	2	2.4	1225	1225	9800			
			* 1/900	5/4338	1.7	2	1225	1225	9800			
			* 1/1200	33/40664	1.3	1.5	1225	1225	9800			

Note 1: Please be sure to read the notes on page 76.

Series	Motor Power	Frame Size	Reduction Ratio	Actual Reduction Ratio	Output Shaft Speed r/min 50 Hz	Output Shaft Speed r/min 60 Hz	Allowable Output Shaft Torque N·m 50 Hz	Allowable Output Shaft Torque N·m 60 Hz	Allowable Output Shaft O.H.L. N	Drawings Foot Mount	Drawings Flange Mount	Drawings Small Flange Mount
MID	3-Phase 0.75 kW	28	1/5	91/459	300	360	23	19	1650	P.92	P.113	P.128
			1/10	1/10	150	180	45	38	2280			
			1/15	91/1360	100	120	68	57	2800			
			1/20	5/102	75	90	91	75	3050			
			1/25	7/170	60	72	114	94	3180			
		32	1/30	3/92	50	60	136	114	5220	P.95	P.116	P.131
			1/40	13/516	37.5	45	175	146	5470			
			1/50	11/540	30	36	220	183	5780			
			1/60	13/774	25	30	264	220	6080			
			1/80	13/1032	18.8	22.5	351	293	6180			
			* 1/100	11/1080	15	18	362	302	6770			
		40	1/100	91/9000	15	18	439	366	9170	P.98	P.119	-
			1/120	77/9400	12.5	15	527	439	9170			
			1/160	9/1400	9.4	11.2	703	585	9170			
			1/200	9/1750	7.5	9	764	732	9170			
		50	1/300	211/62013	5	6	1176	978	9800	P.100	P.121	-
			* 1/375	94/36103	4	4.8	1225	1225	9800			
			* 1/450	65/29167	3.3	4	1225	1225	9800			
	3-Phase 1.5 kW	32	1/5	1/5	300	360	45	38	2280	P.95	P.116	P.131
			1/10	1/10	150	180	91	75	3180			
			1/15	1/15	100	120	136	114	3690			
			1/20	1/20	75	90	181	151	4190			
			1/25	9/230	60	72	226	189	4410			
		40	1/30	1/30	50	60	272	226	6600	P.98	P.119	-
			1/40	13/540	37.5	45	351	293	6960			
			1/50	11/564	30	36	439	366	6960			
			1/60	91/5400	25	30	527	439	7210			
			1/80	13/1080	18.8	22.5	703	585	7400			
			* 1/100	11/1128	15	18	724	603	7400			
		50	1/100	25/2618	15	18	878	732	12500	P.100	P.121	-
			1/120	77/8993	12.5	15	1060	878	12500			
			* 1/160	33/5474	9.4	11.2	1230	1170	12500			
			* 1/200	30/5831	7.5	9	1230	1230	12500			
	3-Phase 2.2 kW	40	1/5	7/36	300	360	67	56	2800	P.98	P.119	-
			1/10	7/72	150	180	133	111	4080			
			1/15	49/720	100	120	200	167	4580			
			1/20	7/144	75	90	266	221	5220			
			1/25	7/180	60	72	332	277	6110			
		50	1/30	5/154	50	60	399	332	9040	P.100	P.121	-
			1/40	399/15488	37.5	45	515	429	9420			
			1/50	399/20240	30	36	644	537	10000			
			1/60	49/2904	25	30	773	644	10000			
			1/80	49/3795	18.8	22.5	1029	858	10100			
			* 1/100	21/2116	15	18	1230	1080	10100			

Note 1: Please be sure to read the notes on page 76.

GA Type Gearmotors/Gearmotors with Brake

[Notes]
- The values in parentheses ( ) in the drawings are the indications for gearmotors with brake.
- The output shaft speed is the value relative to the synchronous speed of the motor and the reduction ratio.
- ▭ in the performance table indicates that the shaft rotates clockwise when viewed from the output shaft side when the connection is made as shown on page 547 (CW). (Refer to the figure on the right)
- Allowable output shaft O.H.L. is the value at the middle of the output shaft.
- The "*" mark indicates a limited torque type. Please make sure to check the allowable output shaft torque in the performance table.

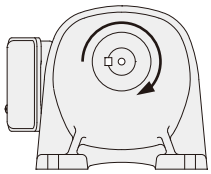

Series	Motor Power	Frame Size	Reduction Ratio	Actual Reduction Ratio	Output Shaft Speed r/min 50 Hz	Output Shaft Speed r/min 60 Hz	Allowable Output Shaft Torque N·m 50 Hz	Allowable Output Shaft Torque N·m 60 Hz	Allowable Output Shaft O.H.L. N	Drawings Foot Mount	Drawings Flange Mount	Drawings Small Flange Mount
MID	3-Phase 0.4 kW	50	* 1/600	57/35360	2.5	3	1225	1044	9800	P.102	-	-
			* 1/750	25/19448	2	2.4	1225	1225	9800			
			* 1/900	5/4338	1.7	2	1225	1225	9800			
			* 1/1200	33/40664	1.3	1.5	1225	1225	9800			
	3-Phase 0.75 kW	50	1/300	211/62013	5	6	1176	978	9800	P.102	-	-
			* 1/375	94/36103	4	4.8	1225	1225	9800			
			* 1/450	65/29167	3.3	4	1225	1225	9800			
	3-Phase 1.5 kW	50	1/100	25/2618	15	18	878	732	12500	P.102	-	-
			1/120	77/8993	12.5	15	1060	878	12500			
			* 1/160	33/5474	9.4	11.2	1230	1170	12500			
			* 1/200	30/5831	7.5	9	1230	1230	12500			
	3-Phase 2.2 kW	50	1/30	5/154	50	60	399	332	9040	P.102	-	-
			1/40	399/15488	37.5	45	515	429	9420			
			1/50	399/20240	30	36	644	537	10000			
			1/60	49/2904	25	30	773	644	10000			
			1/80	49/3795	18.8	22.5	1029	858	10100			
			* 1/100	21/2116	15	18	1230	1080	10100			

G3 Type Gearmotors/Gearmotors with Brake

[Notes]
- The values in parentheses ( ) in the drawings are the indications for gearmotors with brake.
- The output shaft speed is the value relative to the synchronous speed of the motor and the reduction ratio.
- ▭ in the performance table indicates that the shaft rotates clockwise when viewed from the output shaft side when the connection is made as shown on page 548 (CW). (Refer to the figure on the right)
- Allowable output shaft O.H.L. is the value at the middle of the output shaft.
- The "*" mark indicates a limited torque type. Please make sure to check the allowable output shaft torque in the performance table.

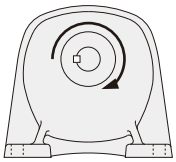

Series	Motor Power	Frame Size	Reduction Ratio	Actual Reduction Ratio	Output Shaft Speed r/min 50 Hz	Output Shaft Speed r/min 60 Hz	Allowable Output Shaft Torque N·m 50 Hz	Allowable Output Shaft Torque N·m 60 Hz	Allowable Output Shaft O.H.L. N	Drawings Foot Mount	Drawings Flange Mount	Drawings Small Flange Mount
MID	1-Phase 0.1 kW	18	1/5	33/164	300	360	3	2.5	770	P.87	P.108	P.123
			1/10	77/779	150	180	6.1	5	1140			
			1/15	119/1804	100	120	9.1	7.5	1270			
			1/20	49/984	75	90	12	9.8	1530			
			1/25	28/697	60	72	15	12.7	1650			
			1/30	35/1066	50	60	19	14.7	1780			
			1/40	35/1404	37.5	45	24	19.6	1910			
			1/50	7/351	30	36	29	24.5	2040			
		22	1/60	11/684	25	30	35	29.4	2800	P.90	P.111	P.126
			1/80	21/1634	18.8	22.5	47	39.2	3180			
			1/100	7/684	15	18	59	49	3180			
			1/120	147/17974	12.5	15	71	58.8	3180			
			1/160	21/3268	9.4	11.2	94	78.4	3180			
			1/200	21/4085	7.5	9	117	98	3180			
		28	1/300	221/65190	5	6	157	130	3430	P.93	P.114	P.129
			1/375	187/68370	4	4.8	196	163	3430			
			1/450	1183/521520	3.3	4	235	196	3430			
		32	1/600	147/88192	2.5	3	313	261	5880	P.96	P.117	P.132
			1/750	49/36464	2	2.4	391	326	5880			
			* 1/900	62/57063	1.7	2	431	391	5880			
			* 1/1200	46/55195	1.3	1.5	431	431	5880			
	1-Phase 0.2 kW	18	1/5	33/164	300	360	6.1	5	770	P.87	P.108	P.123
			1/10	77/779	150	180	11.8	9.8	1140			
			1/15	119/1804	100	120	18.6	14.7	1270			
			1/20	49/984	75	90	24.5	20.6	1450			
			1/25	28/697	60	72	30.4	25.5	1550			
		22	1/30	7/216	50	60	36.3	30.4	2280	P.90	P.111	P.126
			1/40	91/3600	37.5	45	47	39.2	2410			
			1/50	11/540	30	36	58.8	49	2540			
			1/60	637/39600	25	30	70.6	58.8	2800			
			1/80	91/7200	18.8	22.5	94.1	78.4	3000			
			* 1/100	11/1080	15	18	97	80.4	3180			
		28	1/100	13/1353	15	18	117	98	3690	P.93	P.114	P.129
			1/120	91/11000	12.5	15	140	117	4320			
			1/160	1/165	9.4	11.2	187	156	4450			
			1/200	7/1375	7.5	9	234	195	4450			
		32	1/300	91/27348	5	6	313	261	5880	P.96	P.117	P.132
			1/375	77/28620	4	4.8	391	326	5880			
			1/450	91/41022	3.3	4	431	391	5880			
		40	1/600	9/5300	2.5	3	626	521	7060	P.99	P.120	-
			* 1/750	62/46427	2	2.4	764	653	7060			
			* 1/900	23/21259	1.7	2	764	764	7060			
			* 1/1200	9/10600	1.3	1.5	764	764	7060			

1-2. Performance Table

Series	Motor Power	Frame Size	Reduction Ratio	Actual Reduction Ratio	Output Shaft Speed r/min 50 Hz	Output Shaft Speed r/min 60 Hz	Allowable Output Shaft Torque N·m 50 Hz	Allowable Output Shaft Torque N·m 60 Hz	Allowable Output Shaft O.H.L. N	Drawings Foot Mount	Drawings Flange Mount	Drawings Small Flange Mount
MID	1-Phase 0.4 kW	22	1/5	7/34	300	360	12	10	1140	P.90	P.111	P.126
			1/10	7/68	150	180	25	21	1530			
			1/15	49/748	100	120	36	30	1780			
			1/20	7/136	75	90	48	40	1910			
			1/25	7/170	60	72	61	50	2050			
		28	1/30	1/30	50	60	73	61	3310	P.93	P.114	P.129
			1/40	221/8610	37.5	45	94	78	3690			
			1/50	187/9030	30	36	117	98	4080			
			1/60	169/9840	25	30	140	117	4450			
			1/80	65/5166	18.8	22.5	187	156	4450			
			* 1/100	55/5418	15	18	193	161	4450			
		32	1/100	7/688	15	18	234	195	6370	P.96	P.117	P.132
			1/120	77/9360	12.5	15	281	234	7640			
			1/160	21/3328	9.4	11.2	374	313	7640			
			1/200	189/38272	7.5	9	431	390	7640			
		40	1/300	7/2160	5	6	626	521	7060	P.99	P.120	-
			* 1/375	77/29328	4	4.8	764	653	7060			
			* 1/450	49/21600	3.3	4	764	764	7060			
		50	* 1/600	57/35360	2.5	3	1225	1044	9800	P.101	P.122	-
			* 1/750	25/19448	2	2.4	1225	1225	9800			
			* 1/900	5/4338	1.7	2	1225	1225	9800			
			* 1/1200	33/40664	1.3	1.5	1225	1225	9800			

GA Type Gearmotors/Gearmotors with Brake

[Notes]
- The values in parentheses ( ) in the drawings are the indications for gearmotors with brake.
- The output shaft speed is the value relative to the synchronous speed of the motor and the reduction ratio.
- ▭ in the performance table indicates that the shaft rotates clockwise when viewed from the output shaft side when the connection is made as shown on page 548 (CW). (Refer to the figure on the right)
- Allowable output shaft O.H.L. is the value at the middle of the output shaft.
- The "*" mark indicates a limited torque type. Please make sure to check the allowable output shaft torque in the performance table.

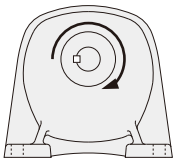

Series	Motor Power	Frame Size	Reduction Ratio	Actual Reduction Ratio	Output Shaft Speed		Allowable Output Shaft Torque		Allowable Output Shaft O.H.L.	Drawings		
					r/min		N·m		N	Foot Mount	Flange Mount	Small Flange Mount
					50 Hz	60 Hz	50 Hz	60 Hz				
MID	1-Phase 0.4 kW	50	* 1/600	57/35360	2.5	3	1225	1044	9800	P.103	-	-
			* 1/750	25/19448	2	2.4	1225	1225	9800			
			* 1/900	5/4338	1.7	2	1225	1225	9800			
			* 1/1200	33/40664	1.3	1.5	1225	1225	9800			

1-3. Drawings

G Type Parallel Shaft | Shaft Diameter **12** | **Foot** Mounting

The values in parentheses ( ) are the indications for gearmotors with brake.

<Figure 1>

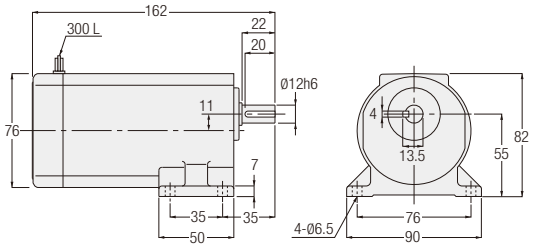

<Figure 2>

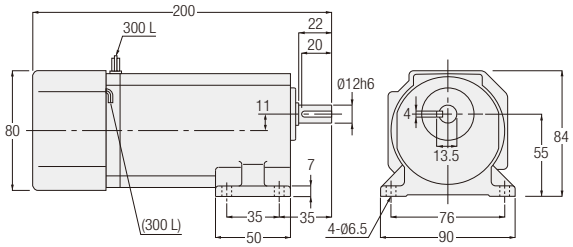

Number of Phases	Power	Part Number	Reduction Ratio	Figure Number	Brake	Approx. Weight (kg)
3-Phase	15 W	GLM-12-∗∗∗-T15	5, 7.5, 10, 15, 20, 25, 30, 40, 50, 60, 80, 100, 120, 160, 200, 240	1	No	2
		GLM-12-∗∗∗-T15W				
		GLMN-12-∗∗∗-T15	5, 7.5, 10, 15, 20, 25, 30, 40, 50, 60, 80, 100, 120, 160, 200, 240	2	Yes	2
		GLMN-12-∗∗∗-T15W				
	25 W	GLM-12-∗∗∗-T25	5, 7.5, 10, 15, 20, 25, 30, 40, 50, 60, 80, 100, 120	1	No	2
		GLM-12-∗∗∗-T25W				
		GLMN-12-∗∗∗-T25	5, 7.5, 10, 15, 20, 25, 30, 40, 50, 60, 80, 100, 120	2	Yes	2
		GLMN-12-∗∗∗-T25W				
	40 W	GLM-12-∗∗∗-T40	5, 7.5, 10, 15, 20, 25, 30, 40, 50, 60	1	No	2
		GLM-12-∗∗∗-T40W		2		
		GLMN-12-∗∗∗-T40	5, 7.5, 10, 15, 20, 25, 30, 40, 50, 60	2	Yes	2
		GLMN-12-∗∗∗-T40W				
	60 W	GLM-12-∗∗∗-T60	5, 7.5, 10, 15, 20, 25, 30	2	No	2
		GLMN-12-∗∗∗-T60			Yes	
1-Phase	15 W	GLM-12-∗∗∗-S15	5, 7.5, 10, 15, 20, 25, 30, 40, 50, 60, 80, 100, 120, 160, 200, 240	1	No	2
		GLM-12-∗∗∗-S15W				
		GLMN-12-∗∗∗-S15	5, 7.5, 10, 15, 20, 25, 30, 40, 50, 60, 80, 100, 120, 160, 200, 240	2	Yes	2
		GLMN-12-∗∗∗-S15W				
	25 W	GLM-12-∗∗∗-S25	5, 7.5, 10, 15, 20, 25, 30, 40, 50, 60, 80, 100, 120	1	No	2
		GLM-12-∗∗∗-S25W				
		GLMN-12-∗∗∗-S25	5, 7.5, 10, 15, 20, 25, 30, 40, 50, 60, 80, 100, 120	2	Yes	2
		GLMN-12-∗∗∗-S25W				
	40 W	GLM-12-∗∗∗-S40	5, 7.5, 10, 15, 20, 25, 30, 40, 50, 60	2	No	2
		GLM-12-∗∗∗-S40W				
		GLMN-12-∗∗∗-S40	5, 7.5, 10, 15, 20, 25, 30, 40, 50, 60	2	Yes	2
		GLMN-12-∗∗∗-S40W				

Note: A reduction ratio will be indicated as ∗∗∗ in the nomenclature.
Note: Please refer to page 73 for the performance table.

G Type Parallel Shaft | Shaft Diameter **15** | **Foot** Mounting

The values in parentheses ( ) are the indications for gearmotors with brake.

<Figure 1>

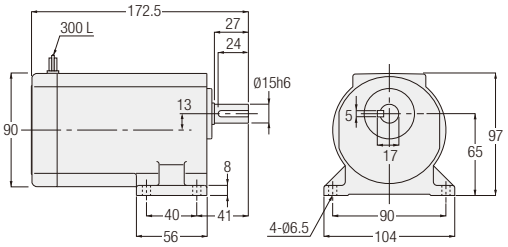

<Figure 2>

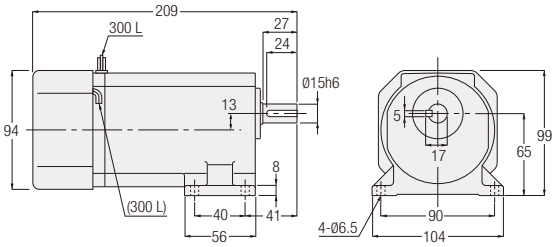

Number of Phases	Power	Part Number	Reduction Ratio	Figure Number	Brake	Approx. Weight (kg)
3-Phase	25 W	GLM-15-∗∗∗-T25	160, 200, 240	1	No	3
		GLM-15-∗∗∗-T25W				
		GLMN-15-∗∗∗-T25	160, 200, 240	2	Yes	3
		GLMN-15-∗∗∗-T25W				
	40 W	GLM-15-∗∗∗-T40	80, 100, 120	1	No	3
		GLM-15-∗∗∗-T40W				
		GLMN-15-∗∗∗-T40	80, 100, 120	2	Yes	3
		GLMN-15-∗∗∗-T40W				
	60 W	GLM-15-∗∗∗-T60	40, 50, 60	1	No	3
		GLM-15-∗∗∗-T60W	5, 7.5, 10, 15, 20, 25, 30, 40, 50, 60			
		GLMN-15-∗∗∗-T60	40, 50, 60	2	Yes	3
		GLMN-15-∗∗∗-T60W	5, 7.5, 10, 15, 20, 25, 30, 40, 50, 60			
	90 W	GLM-15-∗∗∗-T90	5, 7.5, 10, 15, 20, 25, 30	1	No	3
		GLM-15-∗∗∗-T90W		2		
		GLMN-15-∗∗∗-T90	5, 7.5, 10, 15, 20, 25, 30	2	Yes	3
		GLMN-15-∗∗∗-T90W				
1-Phase	25 W	GLM-15-∗∗∗-S25	160, 200, 240	1	No	3
		GLM-15-∗∗∗-S25W				
		GLMN-15-∗∗∗-S25	160, 200, 240	2	Yes	3
		GLMN-15-∗∗∗-S25W				
	40 W	GLM-15-∗∗∗-S40	80, 100, 120	1	No	3
		GLM-15-∗∗∗-S40W				
		GLMN-15-∗∗∗-S40	80, 100, 120	2	Yes	3
		GLMN-15-∗∗∗-S40W				
	60 W	GLM-15-∗∗∗-S60	5, 7.5, 10, 15, 20, 25, 30, 40, 50, 60	2	No	3
		GLM-15-∗∗∗-S60W				
		GLMN-15-∗∗∗-S60	5, 7.5, 10, 15, 20, 25, 30, 40, 50, 60	2	Yes	3
		GLMN-15-∗∗∗-S60W				
	90 W	GLM-15-∗∗∗-S90	5, 7.5, 10, 15, 20, 25, 30	2	No	3
		GLM-15-∗∗∗-S90W				
		GLMN-15-∗∗∗-S90	5, 7.5, 10, 15, 20, 25, 30	2	Yes	3
		GLMN-15-∗∗∗-S90W				

Note: A reduction ratio will be indicated as ∗∗∗ in the nomenclature.
Note: Please refer to page 73 for the performance table.

G Type Parallel Shaft | Shaft Diameter **18** | **Foot** Mounting

The values in parentheses ( ) are the indications for gearmotors with brake.

<Figure 1>

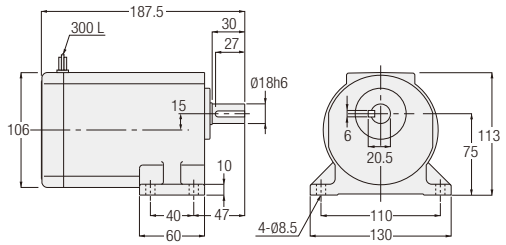

<Figure 2>

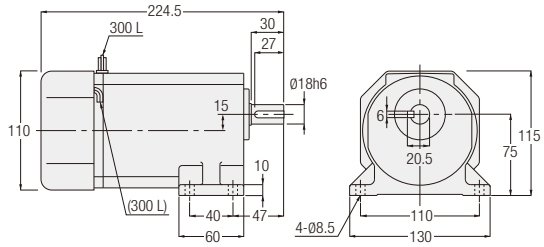

Number of Phases	Power	Part Number	Reduction Ratio	Figure Number	Brake	Approx. Weight (kg)
3-Phase	40 W	GLM-18-∗∗∗-T40	160, 200, 240	1	No	4
		GLM-18-∗∗∗-T40W				
		GLMN-18-∗∗∗-T40	160, 200, 240	2	Yes	4
		GLMN-18-∗∗∗-T40W				
	60 W	GLM-18-∗∗∗-T60	80, 100, 120, 160, 200, 240	1	No	4
		GLM-18-∗∗∗-T60W				
		GLMN-18-∗∗∗-T60	80, 100, 120, 160, 200, 240	2	Yes	4
		GLMN-18-∗∗∗-T60W				
	90 W	GLM-18-∗∗∗-T90	40, 50, 60, 80, 100, 120, 160, 200, 240	1	No	4
		GLM-18-∗∗∗-T90W				
		GLMN-18-∗∗∗-T90	40, 50, 60, 80, 100, 120, 160, 200, 240	2	Yes	4
		GLMN-18-∗∗∗-T90W				
1-Phase	40 W	GLM-18-∗∗∗-S40	160, 200, 240	1	No	4
		GLM-18-∗∗∗-S40W				
		GLMN-18-∗∗∗-S40	160, 200, 240	2	Yes	4
		GLMN-18-∗∗∗-S40W				
	60 W	GLM-18-∗∗∗-S60	80, 100, 120, 160, 200, 240	1	No	4
		GLM-18-∗∗∗-S60W				
		GLMN-18-∗∗∗-S60	80, 100, 120, 160, 200, 240	2	Yes	4
		GLMN-18-∗∗∗-S60W				
	90 W	GLM-18-∗∗∗-S90	40, 50, 60, 80, 100, 120, 160, 200, 240	2	No	4
		GLM-18-∗∗∗-S90W				
		GLMN-18-∗∗∗-S90	40, 50, 60, 80, 100, 120, 160, 200, 240	2	Yes	4
		GLMN-18-∗∗∗-S90W				

Note: A reduction ratio will be indicated as ∗∗∗ in the nomenclature.
Note: Please refer to page 74 for the performance table.

G3 Type Parallel Shaft | Shaft Diameter 18 | Foot Mounting

The values in parentheses ( ) are the indications for gearmotors with brake.

<Figure 1>

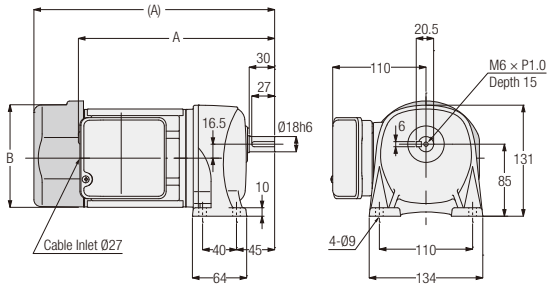

Number of Phases	Power	Part Number	Reduction Ratio	Figure Number	Brake	Approx. Weight (kg)	A	B
3-Phase	0.1 kW	G3L18N∗∗∗-MM01T◇◇TN	5, 10, 15, 20, 25, 30, 40, 50	1	No	6	218.5	Ø115
		G3L18N∗∗∗-MM01T◇◇TB◆			Yes	7.5	258.5	□126
	0.2 kW	G3L18N∗∗∗-MM02T◇◇TN	5, 10, 15, 20, 25	1	No	6.5	233.5	Ø115
		G3L18N∗∗∗-MM02T◇◇TB◆			Yes	8	284	□126

Note: A reduction ratio will be indicated as ∗∗∗ in the nomenclature. In addition, a supply voltage/certification code will be indicated as ◇◇, and a brake specification will be indicated as ◆.

Note: Please refer to page 76 for the performance table.

G3 Type Parallel Shaft | Shaft Diameter 18 | **Foot** Mounting

The values in parentheses ( ) are the indications for gearmotors with brake.

<Figure 1>

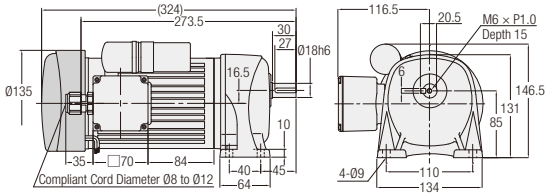

<Figure 2>

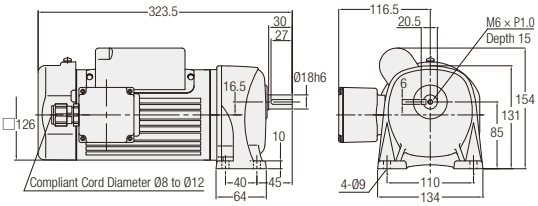

<Figure 3>

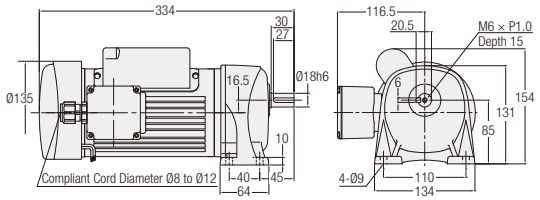

Number of Phases	Power	Part Number	Reduction Ratio	Figure Number	Brake	Approx. Weight (kg)
1-Phase	0.1 kW	G3L18N∗∗∗-MM01C◇JAN	5, 10, 15, 20, 25, 30, 40, 50	1	No	7.5
		G3L18N∗∗∗-MM01C◇JAB2			Yes	9
	0.2 kW	G3L18N∗∗∗-MM02C◇JAN	5, 10, 15, 20, 25	2	No	8.5
		G3L18N∗∗∗-MM02C◇JAB2		3	Yes	10

Note: A reduction ratio will be indicated as ∗∗∗ in the nomenclature. In addition, a supply voltage code will be indicated as ◇.
Note: Please refer to page 80 for the performance table.

G Type Parallel Shaft | Shaft Diameter **22** | **Foot** Mounting

The values in parentheses ( ) are the indications for gearmotors with brake.

<Figure 1>

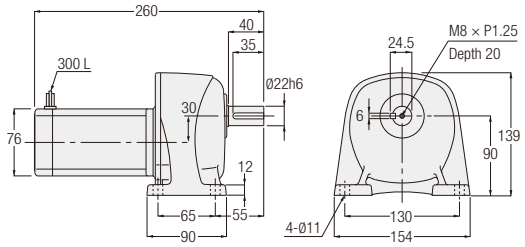

<Figure 2>

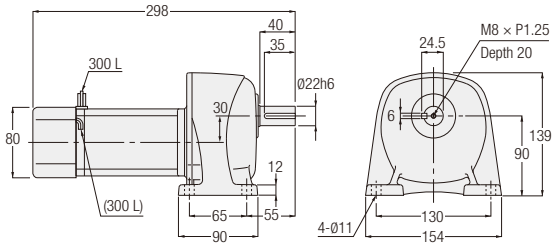

Number of Phases	Power	Part Number	Reduction Ratio	Figure Number	Brake	Approx. Weight (kg)
3-Phase	15 W	GLM-22-∗∗∗-T15	300, 375, 450, 600, 750, 900, 1200, 1500, 1800	1	No	5
		GLM-22-∗∗∗-T15W				
		GLMN-22-∗∗∗-T15	300, 375, 450, 600, 750, 900, 1200, 1500, 1800	2	Yes	5
		GLMN-22-∗∗∗-T15W				
	25 W	GLM-22-∗∗∗-T25	300, 375, 450, 600, 750, 900	1	No	5
		GLM-22-∗∗∗-T25W				
		GLMN-22-∗∗∗-T25	300, 375, 450, 600, 750, 900	2	Yes	5
		GLMN-22-∗∗∗-T25W				
	40 W	GLM-22-∗∗∗-T40	300, 375, 450	1	No	5
		GLM-22-∗∗∗-T40W		2		
		GLMN-22-∗∗∗-T40	300, 375, 450	2	Yes	5
		GLMN-22-∗∗∗-T40W				
	60 W	GLM-22-∗∗∗-T60	300, 375, 450	2	No	5
		GLM-22-∗∗∗-T60W				
		GLMN-22-∗∗∗-T60	300, 375, 450	2	Yes	5
		GLMN-22-∗∗∗-T60W				
1-Phase	15 W	GLM-22-∗∗∗-S15	300, 375, 450, 600, 750, 900, 1200, 1500, 1800	1	No	5
		GLM-22-∗∗∗-S15W				
		GLMN-22-∗∗∗-S15	300, 375, 450, 600, 750, 900, 1200, 1500, 1800	2	Yes	5
		GLMN-22-∗∗∗-S15W				
	25 W	GLM-22-∗∗∗-S25	300, 375, 450, 600, 750, 900	1	No	5
		GLM-22-∗∗∗-S25W				
		GLMN-22-∗∗∗-S25	300, 375, 450, 600, 750, 900	2	Yes	5
		GLMN-22-∗∗∗-S25W				
	40 W	GLM-22-∗∗∗-S40	300, 375, 450	2	No	5
		GLM-22-∗∗∗-S40W				
		GLMN-22-∗∗∗-S40	300, 375, 450	2	Yes	5
		GLMN-22-∗∗∗-S40W				
	60 W	GLM-22-∗∗∗-S60	300, 375, 450	2	No	5
		GLM-22-∗∗∗-S60W				
		GLMN-22-∗∗∗-S60	300, 375, 450	2	Yes	5
		GLMN-22-∗∗∗-S60W				

Note: A reduction ratio will be indicated as ∗∗∗ in the nomenclature.
Note: Please refer to page 73 for the performance table.

G3 Type Parallel Shaft | Shaft Diameter 22 | **Foot** Mounting

The values in parentheses ( ) are the indications for gearmotors with brake.

<Figure 1>

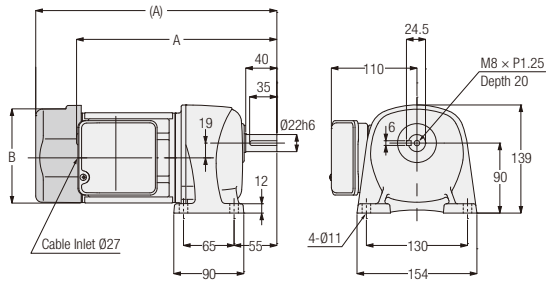

<Figure 2>

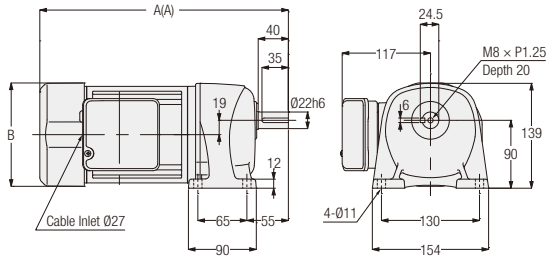

Number of Phases	Power	Part Number	Reduction Ratio	Figure Number	Brake	Approx. Weight (kg)	A	B
3-Phase	0.1 kW	G3L22N∗∗∗-MM01T◇◇TN	60, 80, 100, 120, 160, 200	1	No	7	244.5	Ø115
		G3L22N∗∗∗-MM01T◇◇TB◆			Yes	8.5	284.5	□126
	0.2 kW	G3L22N∗∗∗-MM02T◇◇TN	30, 40, 50, 60, 80, 100	1	No	7.5	259.5	Ø115
		G3L22N∗∗∗-MM02T◇◇TB◆			Yes	9	310	□126
	0.4 kW	G3L22N∗∗∗-MM04T◇◇TN	5, 10, 15, 20, 25	2	No	9.5	309.5	□137
		G3L22N∗∗∗-MM04T◇◇TB◆			Yes	11	329.5	□137

Note: A reduction ratio will be indicated as ∗∗∗ in the nomenclature. In addition, a supply voltage/certification code will be indicated as ◇◇, and a brake specification will be indicated as ◆.

Note: Please refer to page 76 for the performance table.

G3 Type Parallel Shaft | Shaft Diameter 22 | Foot Mounting

The values in parentheses ( ) are the indications for gearmotors with brake.

<Figure 1>

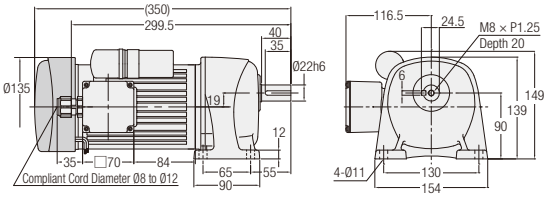

<Figure 2>

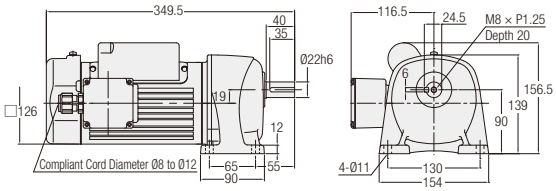

<Figure 3>

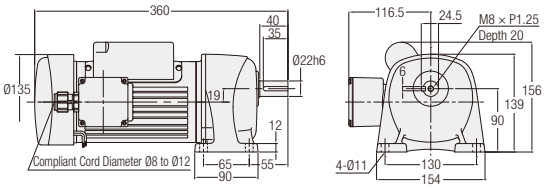

<Figure 4>

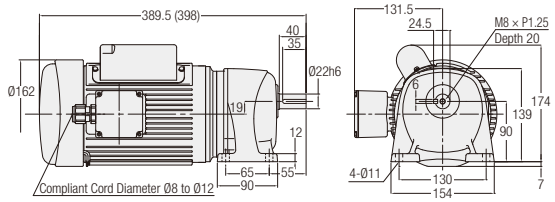

Number of Phases	Power	Part Number	Reduction Ratio	Figure Number	Brake	Approx. Weight (kg)
1-Phase	0.1 kW	G3L22N∗∗∗-MM01C◇JAN	60, 80, 100, 120, 160, 200	1	No	8.5
		G3L22N∗∗∗-MM01C◇JAB2			Yes	10
	0.2 kW	G3L22N∗∗∗-MM02C◇JAN	30, 40, 50, 60, 80, 100	2	No	9.5
		G3L22N∗∗∗-MM02C◇JAB2		3	Yes	11
	0.4 kW	G3L22N∗∗∗-MM04C◇JAN	5, 10, 15, 20, 25	4	No	15
		G3L22N∗∗∗-MM04C◇JAB2			Yes	17.5

Note: A reduction ratio will be indicated as ∗∗∗ in the nomenclature. In addition, a supply voltage code will be indicated as ◇.
Note: Please refer to page 80 for the performance table.

G Type Parallel Shaft | Shaft Diameter **28** | **Foot** Mounting

The values in parentheses ( ) are the indications for gearmotors with brake.

<Figure 1>

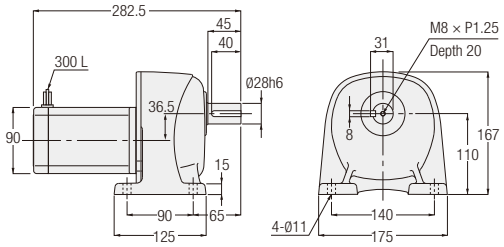

<Figure 2>

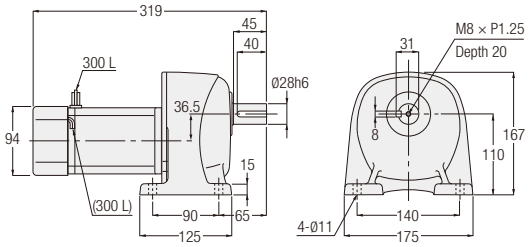

Number of Phases	Power	Part Number	Reduction Ratio	Figure Number	Brake	Approx. Weight (kg)
3-Phase	25 W	GLM-28-∗∗∗-T25	1200, 1500, 1800	1	No	7
		GLM-28-∗∗∗-T25W				
		GLMN-28-∗∗∗-T25	1200, 1500, 1800	2	Yes	7
		GLMN-28-∗∗∗-T25W				
	40 W	GLM-28-∗∗∗-T40	600, 750, 900	1	No	7
		GLM-28-∗∗∗-T40W				
		GLMN-28-∗∗∗-T40	600, 750, 900	2	Yes	7
		GLMN-28-∗∗∗-T40W				
	60 W	GLM-28-∗∗∗-T60	600, 750, 900	1	No	7
		GLM-28-∗∗∗-T60W				
		GLMN-28-∗∗∗-T60	600, 750, 900	2	Yes	7
		GLMN-28-∗∗∗-T60W				
	90 W	GLM-28-∗∗∗-T90	300, 375, 450	1	No	7
		GLM-28-∗∗∗-T90W				
		GLMN-28-∗∗∗-T90	300, 375, 450	2	Yes	7
		GLMN-28-∗∗∗-T90W				
1-Phase	25 W	GLM-28-∗∗∗-S25	1200, 1500, 1800	1	No	7
		GLM-28-∗∗∗-S25W				
		GLMN-28-∗∗∗-S25	1200, 1500, 1800	2	Yes	7
		GLMN-28-∗∗∗-S25W				
	40 W	GLM-28-∗∗∗-S40	600, 750, 900	1	No	7
		GLM-28-∗∗∗-S40W				
		GLMN-28-∗∗∗-S40	600, 750, 900	2	Yes	7
		GLMN-28-∗∗∗-S40W				
	60 W	GLM-28-∗∗∗-S60	600, 750, 900	1	No	7
		GLM-28-∗∗∗-S60W				
		GLMN-28-∗∗∗-S60	600, 750, 900	2	Yes	7
		GLMN-28-∗∗∗-S60W				
	90 W	GLM-28-∗∗∗-S90	300, 375, 450	1	No	7
		GLM-28-∗∗∗-S90W				
		GLMN-28-∗∗∗-S90	300, 375, 450	2	Yes	7
		GLMN-28-∗∗∗-S90W				

Note: A reduction ratio will be indicated as ∗∗∗ in the nomenclature.
Note: Please refer to page 73 for the performance table.

G3 Type Parallel Shaft | Shaft Diameter **28** | **Foot** Mounting

The values in parentheses ( ) are the indications for gearmotors with brake.

<Figure 1>

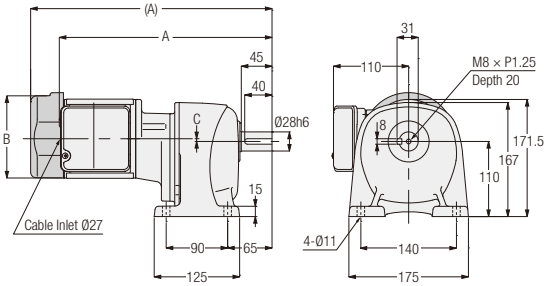

<Figure 2>

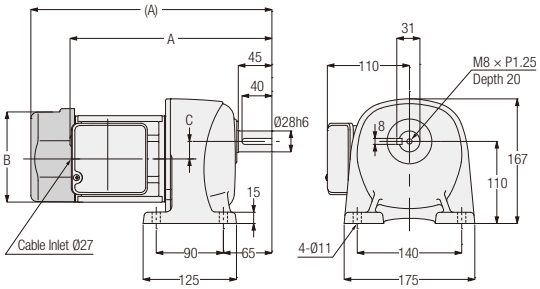

<Figure 3>

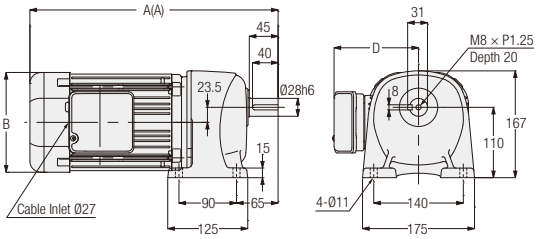

<Figure 4>

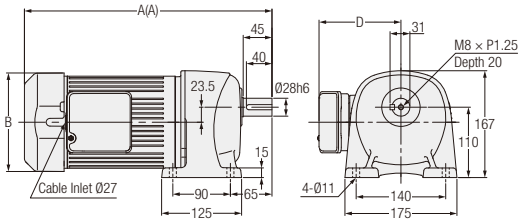

Number of Phases	Power	Part Number	Reduction Ratio	Figure Number	Brake	Approx. Weight (kg)	A	B	C	D
3-Phase	0.1 kW	G3L28N∗∗∗-MM01T◇◇TN	300, 375, 450	1	No	10	313.5	Ø115	4	-
		G3L28N∗∗∗-MM01T◇◇TB◆			Yes	11.5	353.5	□126	4	-
	0.2 kW	G3L28N∗∗∗-MM02T◇◇TN	100, 120, 160, 200	2	No	9.5	272.5	Ø115	23.5	-
		G3L28N∗∗∗-MM02T◇◇TB◆			Yes	11	323	□126	23.5	-
	0.4 kW	G3L28N∗∗∗-MM04T◇◇TN	30, 40, 50, 60, 80, 100	3	No	11.5	325.5	□137	-	117
		G3L28N∗∗∗-MM04T◇◇TB◆			Yes	13	345.5	□137	-	117
	0.75 kW	G3L28N∗∗∗-MR08T◇◇TN	5, 10, 15, 20, 25	4	No	18.5	368	□154	-	128
		G3L28N∗∗∗-MR08T◇◇TB◆			Yes	21	387	□154	-	128

Note: A reduction ratio will be indicated as ∗∗∗ in the nomenclature. In addition, a supply voltage/certification code will be indicated as ◇◇, and a brake specification will be indicated as ◆.

Note: Please refer to page 76 for the performance table.

G3 Type Parallel Shaft | Shaft Diameter 28 | **Foot** Mounting

The values in parentheses ( ) are the indications for gearmotors with brake.

<Figure 1>

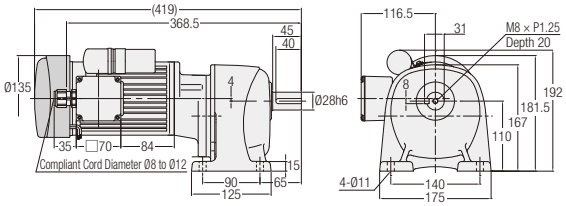

<Figure 2>

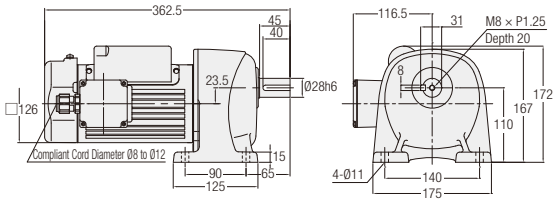

<Figure 3>

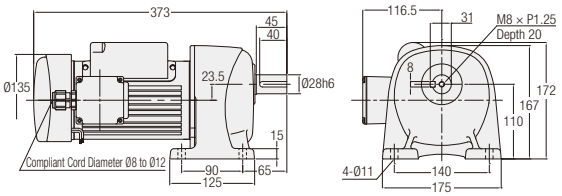

<Figure 4>

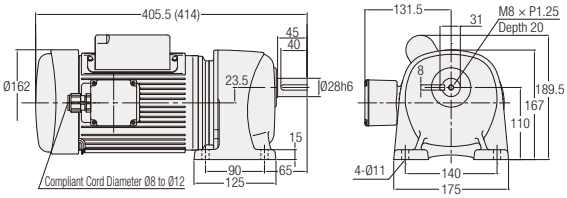

Number of Phases	Power	Part Number	Reduction Ratio	Figure Number	Brake	Approx. Weight (kg)
1-Phase	0.1 kW	G3L28N∗∗∗-MM01C◇JAN	300, 375, 450	1	No	11.5
		G3L28N∗∗∗-MM01C◇JAB2			Yes	13
	0.2 kW	G3L28N∗∗∗-MM02C◇JAN	100, 120, 160, 200	2	No	11.5
		G3L28N∗∗∗-MM02C◇JAB2		3	Yes	13
	0.4 kW	G3L28N∗∗∗-MM04C◇JAN	30, 40, 50, 60, 80, 100	4	No	17
		G3L28N∗∗∗-MM04C◇JAB2			Yes	19.5

Note: A reduction ratio will be indicated as ∗∗∗ in the nomenclature. In addition, a supply voltage code will be indicated as ◇.
Note: Please refer to page 80 for the performance table.

G Type Parallel Shaft | Shaft Diameter **32** | **Foot** Mounting

The values in parentheses ( ) are the indications for gearmotors with brake.

<Figure 1>

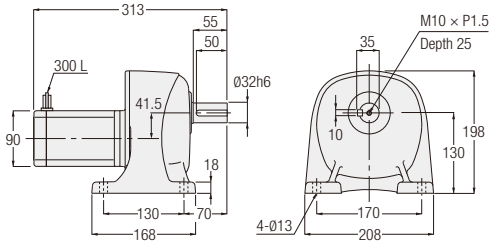

<Figure 2>

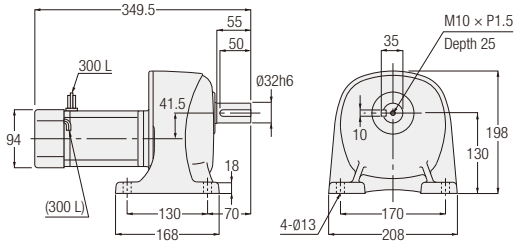

Number of Phases	Power	Part Number	Reduction Ratio	Figure Number	Brake	Approx. Weight (kg)
3-Phase	40 W	GLM-32-∗∗∗-T40	1200, 1500, 1800	1	No	11
		GLM-32-∗∗∗-T40W				
		GLMN-32-∗∗∗-T40	1200, 1500, 1800	2	Yes	11
		GLMN-32-∗∗∗-T40W				
	60 W	GLM-32-∗∗∗-T60	1200, 1500, 1800	1	No	11
		GLM-32-∗∗∗-T60W				
		GLMN-32-∗∗∗-T60	1200, 1500, 1800	2	Yes	11
		GLMN-32-∗∗∗-T60W				
	90 W	GLM-32-∗∗∗-T90	600, 750, 900	1	No	11
		GLM-32-∗∗∗-T90W		2		
		GLMN-32-∗∗∗-T90	600, 750, 900	2	Yes	11
		GLMN-32-∗∗∗-T90W				
1-Phase	40 W	GLM-32-∗∗∗-S40	1200, 1500, 1800	1	No	11
		GLM-32-∗∗∗-S40W				
		GLMN-32-∗∗∗-S40	1200, 1500, 1800	2	Yes	11
		GLMN-32-∗∗∗-S40W				
	60 W	GLM-32-∗∗∗-S60	1200, 1500, 1800	2	No	11
		GLM-32-∗∗∗-S60W				
		GLMN-32-∗∗∗-S60	1200, 1500, 1800	2	Yes	11
		GLMN-32-∗∗∗-S60W				
	90 W	GLM-32-∗∗∗-S90	600, 750, 900	2	No	11
		GLM-32-∗∗∗-S90W				
		GLMN-32-∗∗∗-S90	600, 750, 900	2	Yes	11
		GLMN-32-∗∗∗-S90W				

Note: A reduction ratio will be indicated as ∗∗∗ in the nomenclature.
Note: Please refer to page 74 for the performance table.

G3 Type Parallel Shaft | Shaft Diameter 32 | **Foot** Mounting

The values in parentheses ( ) are the indications for gearmotors with brake.

<Figure 1>

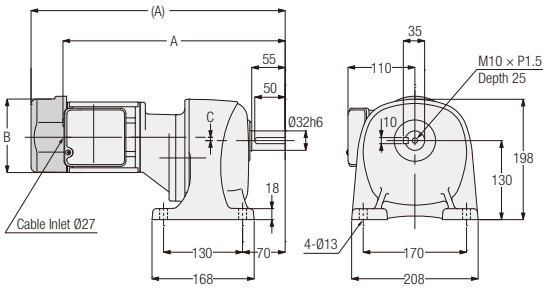

<Figure 2>

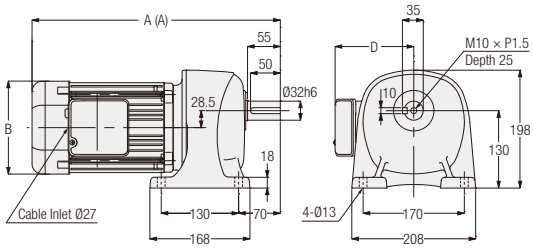

<Figure 3>

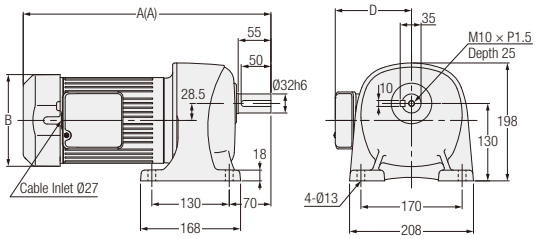

Number of Phases	Power	Part Number	Reduction Ratio	Figure Number	Brake	Approx. Weight (kg)	A	B	C	D
3-Phase	0.1 kW	G3L32N∗∗∗-MM01T◇◇TN	600, 750, 900, 1200	1	No	13	332.5	Ø115	-1	-
		G3L32N∗∗∗-MM01T◇◇TB◆			Yes	14.5	372.5	□126	-1	-
	0.2 kW	G3L32N∗∗∗-MM02T◇◇TN	300, 375, 450	1	No	13.5	367.5	Ø115	5.5	-
		G3L32N∗∗∗-MM02T◇◇TB◆			Yes	15	418	□126	5.5	-
	0.4 kW	G3L32N∗∗∗-MM04T◇◇TN	100, 120, 160, 200	2	No	14.5	344.5	□137	-	117
		G3L32N∗∗∗-MM04T◇◇TB◆			Yes	16	364.5	□137	-	117
	0.75 kW	G3L32N∗∗∗-MR08T◇◇TN	30, 40, 50, 60, 80, 100	3	No	22	397	□154	-	128
		G3L32N∗∗∗-MR08T◇◇TB◆			Yes	24.5	416	□154	-	128
	1.5 kW	G3L32N∗∗∗-MR15T◇◇TN	5, 10, 15, 20, 25	3	No	28	433	□178	-	139
		G3L32N∗∗∗-MR15T◇◇TB◆			Yes	31.5	462	□178	-	139

Note: A reduction ratio will be indicated as ∗∗∗ in the nomenclature. In addition, a supply voltage/certification code will be indicated as ◇◇, and a brake specification will be indicated as ◆.

Note: Please refer to page 76 for the performance table.

G3 Type Parallel Shaft | Shaft Diameter 32 | **Foot** Mounting

The values in parentheses ( ) are the indications for gearmotors with brake.

<Figure 1>

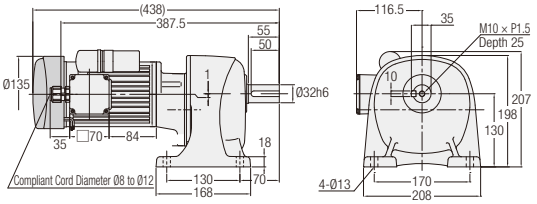

<Figure 2>

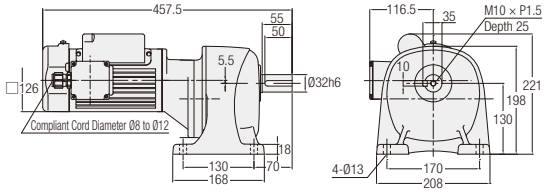

<Figure 3>

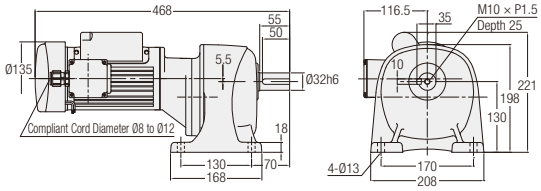

<Figure 4>

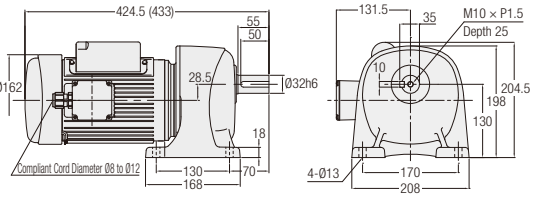

Number of Phases	Power	Part Number	Reduction Ratio	Figure Number	Brake	Approx. Weight (kg)
1-Phase	0.1 kW	G3L32N∗∗∗-MM01C◇JAN	600, 750, 900, 1200	1	No	14.5
		G3L32N∗∗∗-MM01C◇JAB2			Yes	16
	0.2 kW	G3L32N∗∗∗-MM02C◇JAN	300, 375, 450	2	No	15.5
		G3L32N∗∗∗-MM02C◇JAB2		3	Yes	17
	0.4 kW	G3L32N∗∗∗-MM04C◇JAN	100, 120, 160, 200	4	No	20
		G3L32N∗∗∗-MM04C◇JAB2			Yes	22.5

Note: A reduction ratio will be indicated as ∗∗∗ in the nomenclature. In addition, a supply voltage code will be indicated as ◇.
Note: Please refer to page 80 for the performance table.

G Type Parallel Shaft | Shaft Diameter **40** | **Foot** Mounting

The values in parentheses ( ) are the indications for gearmotors with brake.

<Figure 1>

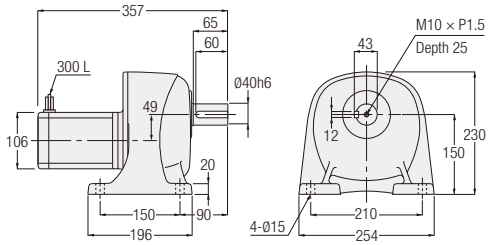

<Figure 2>

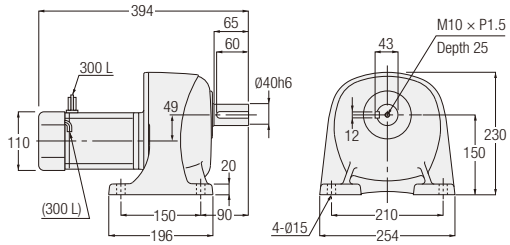

Number of Phases	Power	Part Number	Reduction Ratio	Figure Number	Brake	Approx. Weight (kg)
3-Phase	90 W	GLM-40-∗∗∗-T90	1200, 1500, 1800	1	No	15
		GLM-40-∗∗∗-T90W				
		GLMN-40-∗∗∗-T90	1200, 1500, 1800	2	Yes	15
		GLMN-40-∗∗∗-T90W				
1-Phase	90 W	GLM-40-∗∗∗-S90	1200, 1500, 1800	2	No	15
		GLM-40-∗∗∗-S90W				
		GLMN-40-∗∗∗-S90	1200, 1500, 1800	2	Yes	15
		GLMN-40-∗∗∗-S90W				

Note: A reduction ratio will be indicated as ∗∗∗ in the nomenclature.
Note: Please refer to page 75 for the performance table.

G3 Type Parallel Shaft | Shaft Diameter **40** | **Foot** Mounting

The values in parentheses ( ) are the indications for gearmotors with brake.

<Figure 1>

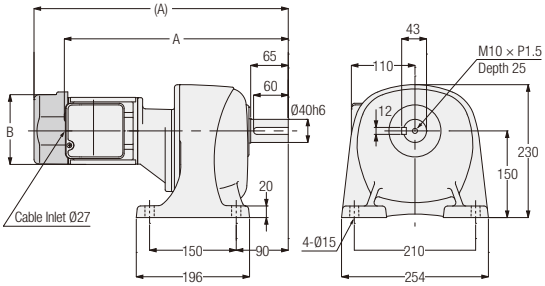

<Figure 2>

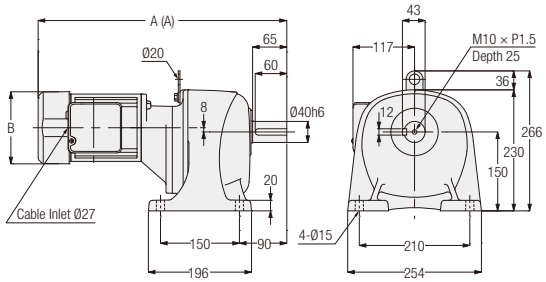

<Figure 3>

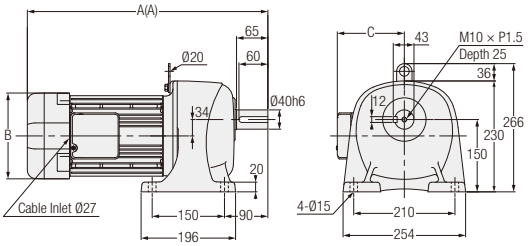

Note: Gearmotors with a motor power of 0.75 kW does not include the hanging plate.

Number of Phases	Power	Part Number	Reduction Ratio	Figure Number	Brake	Approx. Weight (kg)	A	B	C
3-Phase	0.2 kW	G3L40N∗∗∗-MM02T◇◇TN	600, 750, 900, 1200	1	No	20	389.5	Ø115	-
		G3L40N∗∗∗-MM02T◇◇TB◆			Yes	21.5	440	□126	-
	0.4 kW	G3L40N∗∗∗-MM04T◇◇TN	300, 375, 450	2	No	23	452.5	□137	-
		G3L40N∗∗∗-MM04T◇◇TB◆			Yes	24.5	472.5	□137	-
	0.75 kW	G3L40N∗∗∗-MR08T◇◇TN	100, 120, 160, 200	3	No	28.5	419	□154	128
		G3L40N∗∗∗-MR08T◇◇TB◆			Yes	31	438	□154	128
	1.5 kW	G3L40N∗∗∗-MR15T◇◇TN	30, 40, 50, 60, 80, 100	3	No	35	470	□178	139
		G3L40N∗∗∗-MR15T◇◇TB◆			Yes	38.5	499	□178	139
	2.2 kW	G3L40N∗∗∗-MR22T◇◇TN	5, 10, 15, 20, 25	3	No	41.5	503.5	□192	149
		G3L40N∗∗∗-MR22T◇◇TB◆			Yes	45.0	532.5	□192	149

Note: A reduction ratio will be indicated as ∗∗∗ in the nomenclature. In addition, a supply voltage/certification code will be indicated as ◇◇, and a brake specification will be indicated as ◆.

Note: Please refer to page 76 for the performance table.

G3 Type Parallel Shaft | Shaft Diameter **40** | **Foot** Mounting

The values in parentheses ( ) are the indications for gearmotors with brake.

<Figure 1>

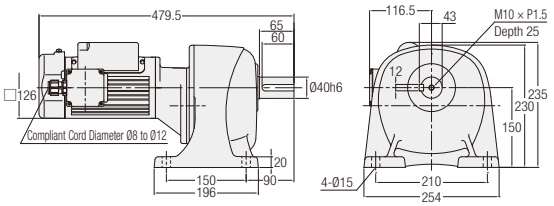

<Figure 2>

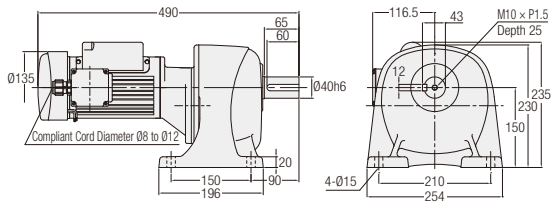

<Figure 3>

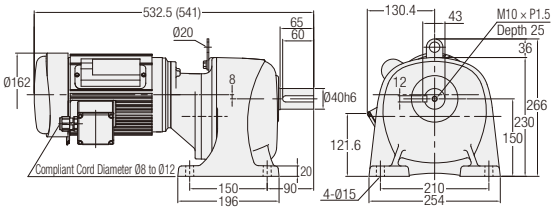

Number of Phases	Power	Part Number	Reduction Ratio	Figure Number	Brake	Approx. Weight (kg)
1-Phase	0.2 kW	G3L40N∗∗∗-MM02C◇JAN	600, 750, 900, 1200	1	No	22
		G3L40N∗∗∗-MM02C◇JAB2		2	Yes	23.5
	0.4 kW	G3L40N∗∗∗-MM04C◇JAN	300, 375, 450	3	No	28.5
		G3L40N∗∗∗-MM04C◇JAB2			Yes	31

Note: A reduction ratio will be indicated as ∗∗∗ in the nomenclature. In addition, a supply voltage code will be indicated as ◇.
Note: Please refer to page 80 for the performance table.

G3 Type Parallel Shaft | Shaft Diameter **50** | **Foot** Mounting

The values in parentheses ( ) are the indications for gearmotors with brake.

<Figure 1>

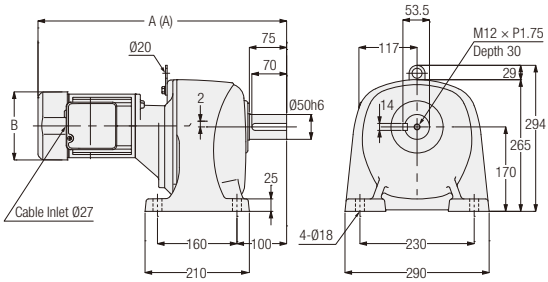

<Figure 2>

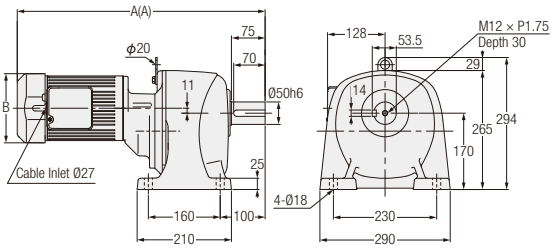

<Figure 3>

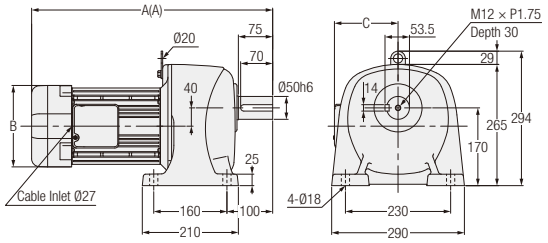

Number of Phases	Power	Part Number	Reduction Ratio	Figure Number	Brake	Approx. Weight (kg)	A	B	C
3-Phase	0.4 kW	G3L50N∗∗∗-MM04T◇◇TN	600, 750, 900, 1200	1	No	52.5	480.5	□137	-
		G3L50N∗∗∗-MM04T◇◇TB◆			Yes	54	500.5	□137	-
	0.75 kW	G3L50N∗∗∗-MR08T◇◇TN	300, 375, 450	2	No	60	533	□154	-
		G3L50N∗∗∗-MR08T◇◇TB◆			Yes	62.5	552	□154	-
	1.5 kW	G3L50N∗∗∗-MR15T◇◇TN	100, 120, 160, 200	3	No	64.5	498	□178	139
		G3L50N∗∗∗-MR15T◇◇TB◆			Yes	68	527	□178	139
	2.2 kW	G3L50N∗∗∗-MR22T◇◇TN	30, 40, 50, 60, 80, 100	3	No	71.5	547.5	□192	149
		G3L50N∗∗∗-MR22T◇◇TB◆			Yes	75	576.5	□192	149

Note: A reduction ratio will be indicated as ∗∗∗ in the nomenclature. In addition, a supply voltage/certification code will be indicated as ◇◇, and a brake specification will be indicated as ◆.

Note: Please refer to page 77 for the performance table.

G3 Type Parallel Shaft | Shaft Diameter **50** | **Foot** Mounting

The values in parentheses ( ) are the indications for gearmotors with brake.

<Figure 1>

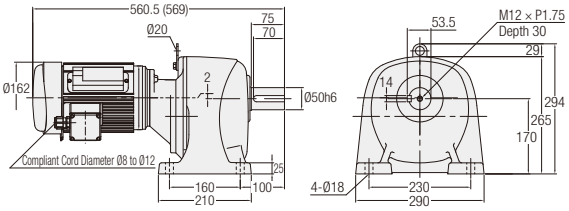

Number of Phases	Power	Part Number	Reduction Ratio	Figure Number	Brake	Approx. Weight (kg)
1-Phase	0.4 kW	G3L50N∗∗∗-MM04C◇JAN	600, 750, 900, 1200	1	No	58
		G3L50N∗∗∗-MM04C◇JAB2			Yes	60.5

Note: A reduction ratio will be indicated as ∗∗∗ in the nomenclature. In addition, a supply voltage code will be indicated as ◇.
Note: Please refer to page 81 for the performance table.

GA Type Parallel Shaft | Shaft Diameter **50** | **Foot** Mounting

The values in parentheses ( ) are the indications for gearmotors with brake.

<Figure 1>

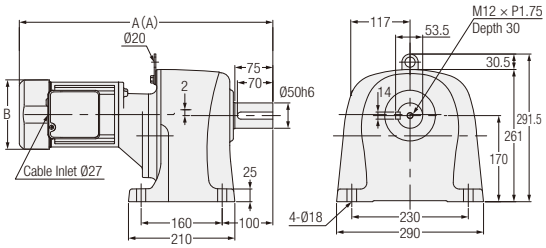

<Figure 2>

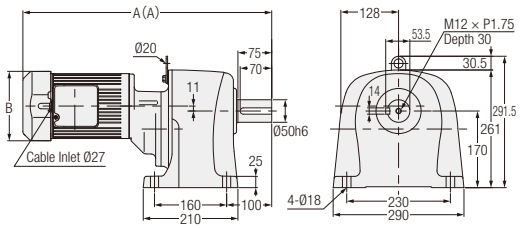

<Figure 3>

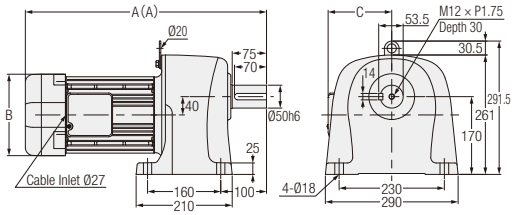

Number of Phases	Power	Part Number	Reduction Ratio	Figure Number	Brake	Approx. Weight (kg)	A	B	C
3-Phase	0.4 kW	GAL50N∗∗∗-MM04T◇◇TN	600, 750, 900, 1200	1	No	33	480.5	□137	-
		GAL50N∗∗∗-MM04T◇◇TB◆			Yes	34.5	500.5	□137	-
	0.75 kW	GAL50N∗∗∗-MR08T◇◇TN	300, 375, 450	2	No	40.5	533	□154	-
		GAL50N∗∗∗-MR08T◇◇TB◆			Yes	43	552	□154	-
	1.5 kW	GAL50N∗∗∗-MR15T◇◇TN	100, 120, 160, 200	3	No	45	498	□178	139
		GAL50N∗∗∗-MR15T◇◇TB◆			Yes	48.5	527	□178	139
	2.2 kW	GAL50N∗∗∗-MR22T◇◇TN	30, 40, 50, 60, 80, 100	3	No	52	547.5	□192	149
		GAL50N∗∗∗-MR22T◇◇TB◆			Yes	55.5	576.5	□192	149

Note: A reduction ratio will be indicated as ∗∗∗ in the nomenclature. In addition, a supply voltage/certification code will be indicated as ◇◇, and a brake specification will be indicated as ◆.

Note: Please refer to page 79 for the performance table.

GA Type Parallel Shaft | Shaft Diameter 50 | **Foot** Mounting

The values in parentheses ( ) are the indications for gearmotors with brake.

<Figure 1>

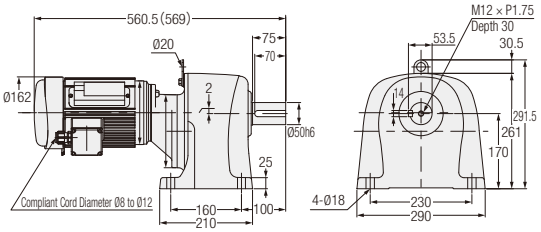

Number of Phases	Power	Part Number	Reduction Ratio	Figure Number	Brake	Approx. Weight (kg)
1-Phase	0.4 kW	GAL50N∗∗∗-MM04C◇JAN	600, 750, 900, 1200	1	No	38.5
		GAL50N∗∗∗-MM04C◇JAB2			Yes	41

Note: A reduction ratio will be indicated as ∗∗∗ in the nomenclature. In addition, a supply voltage code will be indicated as ◇.
Note: Please refer to page 82 for the performance table.

G Type Parallel Shaft | Shaft Diameter **12** | **Flange** Mounting

The values in parentheses ( ) are the indications for gearmotors with brake.

<Figure 1>

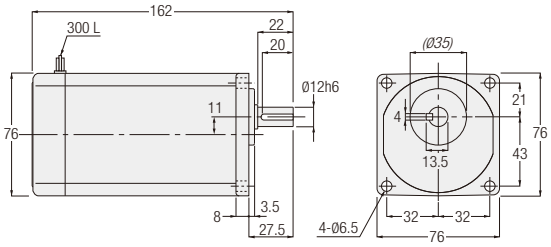

<Figure 2>

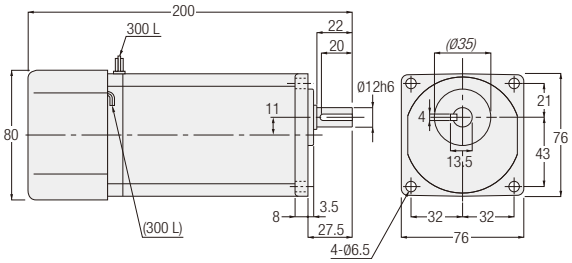

Note: The italic dimension indicates areas with remaining casting surface. Please add 0.5 mm or more to the italic dimension for the diameter of the mating hole.

Number of Phases	Power	Part Number	Reduction Ratio	Figure Number	Brake	Approx. Weight (kg)
3-Phase	15 W	GFM-12-∗∗∗-T15	5, 7.5, 10, 15, 20, 25, 30, 40, 50, 60, 80, 100, 120, 160, 200, 240	1	No	2
		GFM-12-∗∗∗-T15W				
		GFMN-12-∗∗∗-T15	5, 7.5, 10, 15, 20, 25, 30, 40, 50, 60, 80, 100, 120, 160, 200, 240	2	Yes	2
		GFMN-12-∗∗∗-T15W				
	25 W	GFM-12-∗∗∗-T25	5, 7.5, 10, 15, 20, 25, 30, 40, 50, 60, 80, 100, 120	1	No	2
		GFM-12-∗∗∗-T25W				
		GFMN-12-∗∗∗-T25	5, 7.5, 10, 15, 20, 25, 30, 40, 50, 60, 80, 100, 120	2	Yes	2
		GFMN-12-∗∗∗-T25W				
	40 W	GFM-12-∗∗∗-T40	5, 7.5, 10, 15, 20, 25, 30, 40, 50, 60	1	No	2
		GFM-12-∗∗∗-T40W		2		
		GFMN-12-∗∗∗-T40	5, 7.5, 10, 15, 20, 25, 30, 40, 50, 60	2	Yes	2
		GFMN-12-∗∗∗-T40W				
	60 W	GFM-12-∗∗∗-T60	5, 7.5, 10, 15, 20, 25, 30	2	No	2
		GFMN-12-∗∗∗-T60			Yes	
1-Phase	15 W	GFM-12-∗∗∗-S15	5, 7.5, 10, 15, 20, 25, 30, 40, 50, 60, 80, 100, 120, 160, 200, 240	1	No	2
		GFM-12-∗∗∗-S15W				
		GFMN-12-∗∗∗-S15	5, 7.5, 10, 15, 20, 25, 30, 40, 50, 60, 80, 100, 120, 160, 200, 240	2	Yes	2
		GFMN-12-∗∗∗-S15W				
	25 W	GFM-12-∗∗∗-S25	5, 7.5, 10, 15, 20, 25, 30, 40, 50, 60, 80, 100, 120	1	No	2
		GFM-12-∗∗∗-S25W				
		GFMN-12-∗∗∗-S25	5, 7.5, 10, 15, 20, 25, 30, 40, 50, 60, 80, 100, 120	2	Yes	2
		GFMN-12-∗∗∗-S25W				
	40 W	GFM-12-∗∗∗-S40	5, 7.5, 10, 15, 20, 25, 30, 40, 50, 60	2	No	2
		GFM-12-∗∗∗-S40W				
		GFMN-12-∗∗∗-S40	5, 7.5, 10, 15, 20, 25, 30, 40, 50, 60	2	Yes	2
		GFMN-12-∗∗∗-S40W				

Note: A reduction ratio will be indicated as ∗∗∗ in the nomenclature.
Note: Please refer to page 73 for the performance table.

G Type Parallel Shaft | Shaft Diameter **15** | **Flange** Mounting

The values in parentheses ( ) are the indications for gearmotors with brake.

<Figure 1>

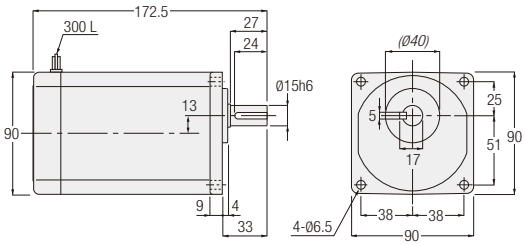

<Figure 2>

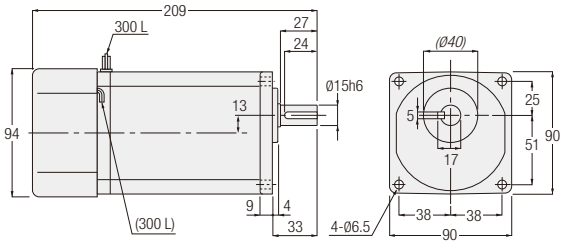

Note: The italic dimension indicates areas with remaining casting surface. Please add 0.5 mm or more to the italic dimension for the diameter of the mating hole.

Number of Phases	Power	Part Number	Reduction Ratio	Figure Number	Brake	Approx. Weight (kg)
3-Phase	25 W	GFM-15-∗∗∗-T25	160, 200, 240	1	No	3
		GFM-15-∗∗∗-T25W				
		GFMN-15-∗∗∗-T25	160, 200, 240	2	Yes	3
		GFMN-15-∗∗∗-T25W				
	40 W	GFM-15-∗∗∗-T40	80, 100, 120	1	No	3
		GFM-15-∗∗∗-T40W				
		GFMN-15-∗∗∗-T40	80, 100, 120	2	Yes	3
		GFMN-15-∗∗∗-T40W				
	60 W	GFM-15-∗∗∗-T60	40, 50, 60	1	No	3
		GFM-15-∗∗∗-T60W	5, 7.5, 10, 15, 20, 25, 30, 40, 50, 60			
		GFMN-15-∗∗∗-T60	40, 50, 60	2	Yes	3
		GFMN-15-∗∗∗-T60W	5, 7.5, 10, 15, 20, 25, 30, 40, 50, 60			
	90 W	GFM-15-∗∗∗-T90	5, 7.5, 10, 15, 20, 25, 30	1	No	3
		GFM-15-∗∗∗-T90W		2		
		GFMN-15-∗∗∗-T90	5, 7.5, 10, 15, 20, 25, 30	2	Yes	3
		GFMN-15-∗∗∗-T90W				
1-Phase	25 W	GFM-15-∗∗∗-S25	160, 200, 240	1	No	3
		GFM-15-∗∗∗-S25W				
		GFMN-15-∗∗∗-S25	160, 200, 240	2	Yes	3
		GFMN-15-∗∗∗-S25W				
	40 W	GFM-15-∗∗∗-S40	80, 100, 120	1	No	3
		GFM-15-∗∗∗-S40W				
		GFMN-15-∗∗∗-S40	80, 100, 120	2	Yes	3
		GFMN-15-∗∗∗-S40W				
	60 W	GFM-15-∗∗∗-S60	5, 7.5, 10, 15, 20, 25, 30, 40, 50, 60	2	No	3
		GFM-15-∗∗∗-S60W				
		GFMN-15-∗∗∗-S60	5, 7.5, 10, 15, 20, 25, 30, 40, 50, 60	2	Yes	3
		GFMN-15-∗∗∗-S60W				
	90 W	GFM-15-∗∗∗-S90	5, 7.5, 10, 15, 20, 25, 30	2	No	3
		GFM-15-∗∗∗-S90W				
		GFMN-15-∗∗∗-S90	5, 7.5, 10, 15, 20, 25, 30	2	Yes	3
		GFMN-15-∗∗∗-S90W				

Note: A reduction ratio will be indicated as ∗∗∗ in the nomenclature.
Note: Please refer to page 73 for the performance table.

G Type Parallel Shaft | Shaft Diameter **18** | **Flange** Mounting

The values in parentheses ( ) are the indications for gearmotors with brake.

<Figure 1>

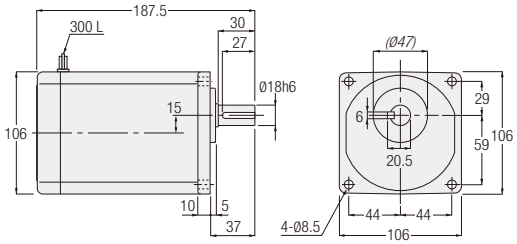

<Figure 2>

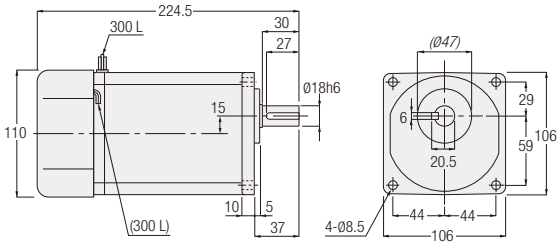

Note: The italic dimension indicates areas with remaining casting surface. Please add 0.5 mm or more to the italic dimension for the diameter of the mating hole.

Number of Phases	Power	Part Number	Reduction Ratio	Figure Number	Brake	Approx. Weight (kg)
3-Phase	40 W	GFM-18-∗∗∗-T40	160, 200, 240	1	No	4
		GFM-18-∗∗∗-T40W				
		GFMN-18-∗∗∗-T40	160, 200, 240	2	Yes	4
		GFMN-18-∗∗∗-T40W				
	60 W	GFM-18-∗∗∗-T60	80, 100, 120, 160, 200, 240	1	No	4
		GFM-18-∗∗∗-T60W				
		GFMN-18-∗∗∗-T60	80, 100, 120, 160, 200, 240	2	Yes	4
		GFMN-18-∗∗∗-T60W				
	90 W	GFM-18-∗∗∗-T90	40, 50, 60, 80, 100, 120, 160, 200, 240	1	No	4
		GFM-18-∗∗∗-T90W				
		GFMN-18-∗∗∗-T90	40, 50, 60, 80, 100, 120, 160, 200, 240	2	Yes	4
		GFMN-18-∗∗∗-T90W				
1-Phase	40 W	GFM-18-∗∗∗-S40	160, 200, 240	1	No	4
		GFM-18-∗∗∗-S40W				
		GFMN-18-∗∗∗-S40	160, 200, 240	2	Yes	4
		GFMN-18-∗∗∗-S40W				
	60 W	GFM-18-∗∗∗-S60	80, 100, 120, 160, 200, 240	1	No	4
		GFM-18-∗∗∗-S60W				
		GFMN-18-∗∗∗-S60	80, 100, 120, 160, 200, 240	2	Yes	4
		GFMN-18-∗∗∗-S60W				
	90 W	GFM-18-∗∗∗-S90	40, 50, 60, 80, 100, 120, 160, 200, 240	2	No	4
		GFM-18-∗∗∗-S90W				
		GFMN-18-∗∗∗-S90	40, 50, 60, 80, 100, 120, 160, 200, 240	2	Yes	4
		GFMN-18-∗∗∗-S90W				

Note: A reduction ratio will be indicated as ∗∗∗ in the nomenclature.
Note: Please refer to page 74 for the performance table.

G3 Type Parallel Shaft | Shaft Diameter **18** | **Flange** Mounting

The values in parentheses ( ) are the indications for gearmotors with brake.

<Figure 1>

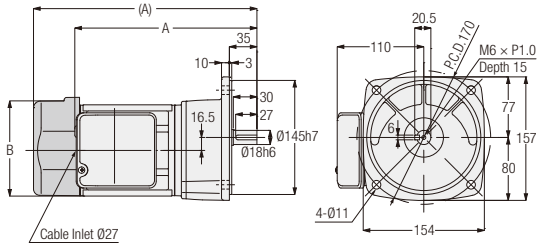

Number of Phases	Power	Part Number	Reduction Ratio	Figure Number	Brake	Approx. Weight (kg)	A	B
3-Phase	0.1 kW	G3F18N∗∗∗-MM01T◇◇TN	5, 10, 15, 20, 25, 30, 40, 50	1	No	6.5	218.5	Ø115
		G3F18N∗∗∗-MM01T◇◇TB◆			Yes	8	258.5	□126
	0.2 kW	G3F18N∗∗∗-MM02T◇◇TN	5, 10, 15, 20, 25	1	No	7	233.5	Ø115
		G3F18N∗∗∗-MM02T◇◇TB◆			Yes	8.5	284	□126

Note: A reduction ratio will be indicated as ∗∗∗ in the nomenclature. In addition, a supply voltage/certification code will be indicated as ◇◇, and a brake specification will be indicated as ◆.
Note: Please refer to page 76 for the performance table.

G3 Type Parallel Shaft | Shaft Diameter 18 | Flange Mounting

The values in parentheses ( ) are the indications for gearmotors with brake.

<Figure 1>

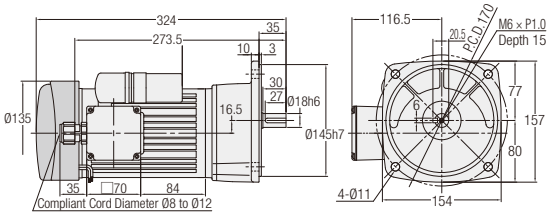

<Figure 2>

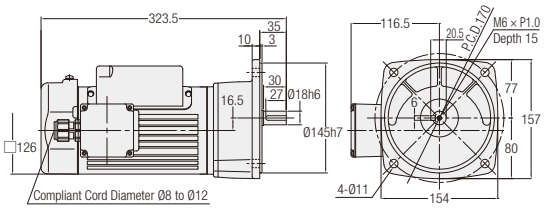

<Figure 3>

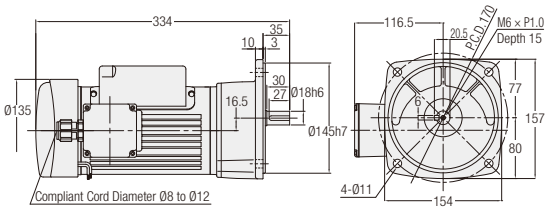

Number of Phases	Power	Part Number	Reduction Ratio	Figure Number	Brake	Approx. Weight (kg)
1-Phase	0.1 kW	G3F18N∗∗∗-MM01C◇JAN	5, 10, 15, 20, 25, 30, 40, 50	1	No	8
		G3F18N∗∗∗-MM01C◇JAB2			Yes	9.5
	0.2 kW	G3F18N∗∗∗-MM02C◇JAN	5, 10, 15, 20, 25	2	No	9
		G3F18N∗∗∗-MM02C◇JAB2		3	Yes	10.5

Note: A reduction ratio will be indicated as ∗∗∗ in the nomenclature. In addition, a supply voltage code will be indicated as ◇.
Note: Please refer to page 80 for the performance table.

G Type Parallel Shaft | Shaft Diameter 22 | **Flange** Mounting

The values in parentheses ( ) are the indications for gearmotors with brake.

<Figure 1>

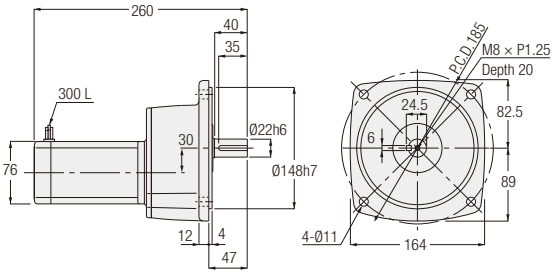

<Figure 2>

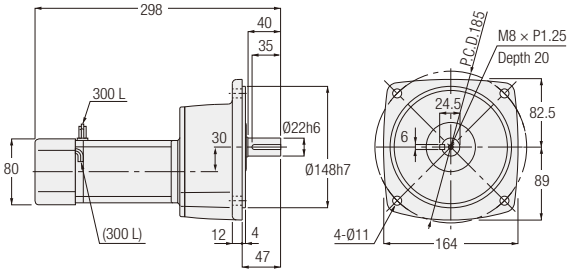

Number of Phases	Power	Part Number	Reduction Ratio	Figure Number	Brake	Approx. Weight (kg)
3-Phase	15 W	GFM-22-∗∗∗-T15	300, 375, 450, 600, 750, 900, 1200, 1500, 1800	1	No	5
		GFM-22-∗∗∗-T15W				
		GFMN-22-∗∗∗-T15	300, 375, 450, 600, 750, 900, 1200, 1500, 1800	2	Yes	5
		GFMN-22-∗∗∗-T15W				
	25 W	GFM-22-∗∗∗-T25	300, 375, 450, 600, 750, 900	1	No	5
		GFM-22-∗∗∗-T25W				
		GFMN-22-∗∗∗-T25	300, 375, 450, 600, 750, 900	2	Yes	5
		GFMN-22-∗∗∗-T25W				
	40 W	GFM-22-∗∗∗-T40	300, 375, 450	1	No	5
		GFM-22-∗∗∗-T40W		2		
		GFMN-22-∗∗∗-T40	300, 375, 450	2	Yes	5
		GFMN-22-∗∗∗-T40W				
	60 W	GFM-22-∗∗∗-T60	300, 375, 450	2	No	5
		GFM-22-∗∗∗-T60W				
		GFMN-22-∗∗∗-T60	300, 375, 450	2	Yes	5
		GFMN-22-∗∗∗-T60W				
1-Phase	15 W	GFM-22-∗∗∗-S15	300, 375, 450, 600, 750, 900, 1200, 1500, 1800	1	No	5
		GFM-22-∗∗∗-S15W				
		GFMN-22-∗∗∗-S15	300, 375, 450, 600, 750, 900, 1200, 1500, 1800	2	Yes	5
		GFMN-22-∗∗∗-S15W				
	25 W	GFM-22-∗∗∗-S25	300, 375, 450, 600, 750, 900	1	No	5
		GFM-22-∗∗∗-S25W				
		GFMN-22-∗∗∗-S25	300, 375, 450, 600, 750, 900	2	Yes	5
		GFMN-22-∗∗∗-S25W				
	40 W	GFM-22-∗∗∗-S40	300, 375, 450	2	No	5
		GFM-22-∗∗∗-S40W				
		GFMN-22-∗∗∗-S40	300, 375, 450	2	Yes	5
		GFMN-22-∗∗∗-S40W				
	60 W	GFM-22-∗∗∗-S60	300, 375, 450	2	No	5
		GFM-22-∗∗∗-S60W				
		GFMN-22-∗∗∗-S60	300, 375, 450	2	Yes	5
		GFMN-22-∗∗∗-S60W				

Note: A reduction ratio will be indicated as ∗∗∗ in the nomenclature.
Note: Please refer to page 73 for the performance table.

G3 Type Parallel Shaft | Shaft Diameter **22** | **Flange** Mounting

The values in parentheses ( ) are the indications for gearmotors with brake.

<Figure 1>

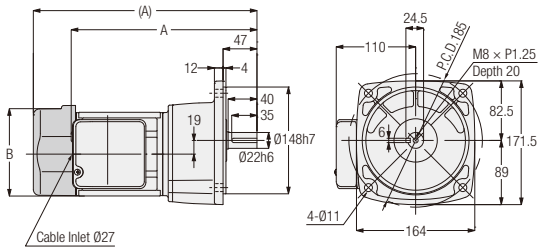

<Figure 2>

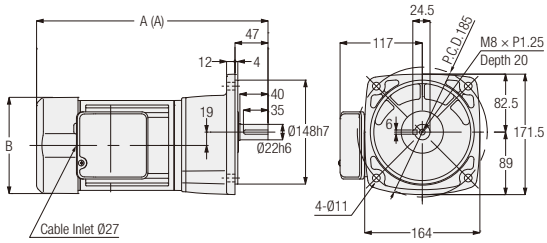

Number of Phases	Power	Part Number	Reduction Ratio	Figure Number	Brake	Approx. Weight (kg)	A	B
3-Phase	0.1 kW	G3F22N∗∗∗-MM01T◇◇TN	60, 80, 100, 120, 160, 200	1	No	7.5	244.5	Ø115
		G3F22N∗∗∗-MM01T◇◇TB◆			Yes	9	284.5	□126
	0.2 kW	G3F22N∗∗∗-MM02T◇◇TN	30, 40, 50, 60, 80, 100	1	No	8	259.5	Ø115
		G3F22N∗∗∗-MM02T◇◇TB◆			Yes	9.5	310	□126
	0.4 kW	G3F22N∗∗∗-MM04T◇◇TN	5, 10, 15, 20, 25	2	No	10	309.5	□137
		G3F22N∗∗∗-MM04T◇◇TB◆			Yes	11.5	329.5	□137

Note: A reduction ratio will be indicated as ∗∗∗ in the nomenclature. In addition, a supply voltage/certification code will be indicated as ◇◇, and a brake specification will be indicated as ◆.

Note: Please refer to page 76 for the performance table.

G3 Type Parallel Shaft | Shaft Diameter 22 | **Flange** Mounting

The values in parentheses ( ) are the indications for gearmotors with brake.

<Figure 1>

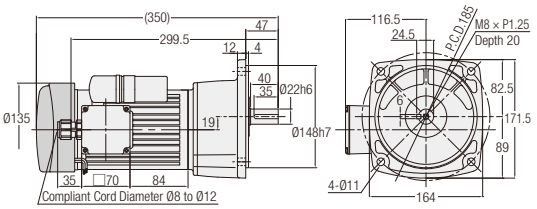

<Figure 2>

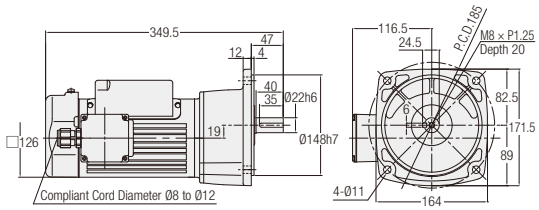

<Figure 3>

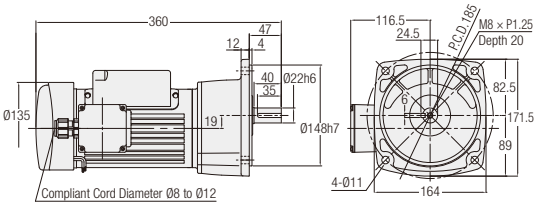

<Figure 4>

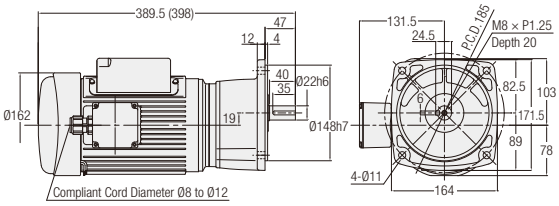

Number of Phases	Power	Part Number	Reduction Ratio	Figure Number	Brake	Approx. Weight (kg)
1-Phase	0.1 kW	G3F22N∗∗∗-MM01C◇JAN	60, 80, 100, 120, 160, 200	1	No	9
		G3F22N∗∗∗-MM01C◇JAB2			Yes	10.5
	0.2 kW	G3F22N∗∗∗-MM02C◇JAN	30, 40, 50, 60, 80, 100	2	No	10
		G3F22N∗∗∗-MM02C◇JAB2		3	Yes	11.5
	0.4 kW	G3F22N∗∗∗-MM04C◇JAN	5, 10, 15, 20, 25	4	No	15.5
		G3F22N∗∗∗-MM04C◇JAB2			Yes	18

Note: A reduction ratio will be indicated as ∗∗∗ in the nomenclature. In addition, a supply voltage code will be indicated as ◇.
Note: Please refer to page 80 for the performance table.

G Type Parallel Shaft | Shaft Diameter **28** | **Flange** Mounting

The values in parentheses ( ) are the indications for gearmotors with brake.

<Figure 1>

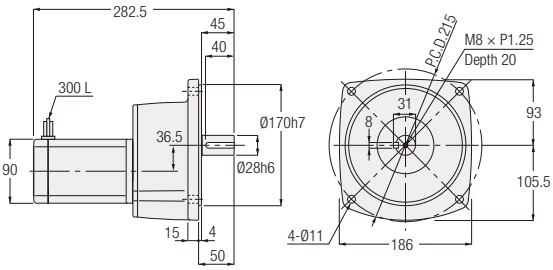

<Figure 2>

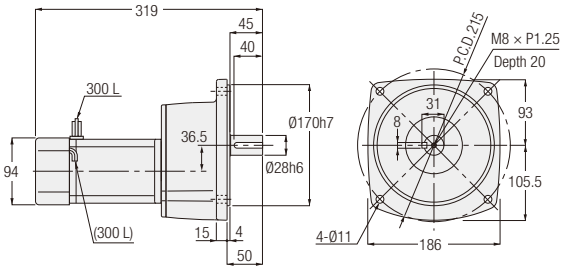

Number of Phases	Power	Part Number	Reduction Ratio	Figure Number	Brake	Approx. Weight (kg)
3-Phase	25 W	GFM-28-∗∗∗-T25	1200, 1500, 1800	1	No	7
		GFM-28-∗∗∗-T25W				
		GFMN-28-∗∗∗-T25	1200, 1500, 1800	2	Yes	7
		GFMN-28-∗∗∗-T25W				
	40 W	GFM-28-∗∗∗-T40	600, 750, 900	1	No	7
		GFM-28-∗∗∗-T40W				
		GFMN-28-∗∗∗-T40	600, 750, 900	2	Yes	7
		GFMN-28-∗∗∗-T40W				
	60 W	GFM-28-∗∗∗-T60	600, 750, 900	1	No	7
		GFM-28-∗∗∗-T60W				
		GFMN-28-∗∗∗-T60	600, 750, 900	2	Yes	7
		GFMN-28-∗∗∗-T60W				
	90 W	GFM-28-∗∗∗-T90	300, 375, 450	1	No	7
		GFM-28-∗∗∗-T90W		2		
		GFMN-28-∗∗∗-T90	300, 375, 450	2	Yes	7
		GFMN-28-∗∗∗-T90W				
1-Phase	25 W	GFM-28-∗∗∗-S25	1200, 1500, 1800	1	No	7
		GFM-28-∗∗∗-S25W				
		GFMN-28-∗∗∗-S25	1200, 1500, 1800	2	Yes	7
		GFMN-28-∗∗∗-S25W				
	40 W	GFM-28-∗∗∗-S40	600, 750, 900	2	No	7
		GFM-28-∗∗∗-S40W				
		GFMN-28-∗∗∗-S40	600, 750, 900	2	Yes	7
		GFMN-28-∗∗∗-S40W				
	60 W	GFM-28-∗∗∗-S60	600, 750, 900	2	No	7
		GFM-28-∗∗∗-S60W				
		GFMN-28-∗∗∗-S60	600, 750, 900	2	Yes	7
		GFMN-28-∗∗∗-S60W				
	90 W	GFM-28-∗∗∗-S90	300, 375, 450	2	No	7
		GFM-28-∗∗∗-S90W				
		GFMN-28-∗∗∗-S90	300, 375, 450	2	Yes	7
		GFMN-28-∗∗∗-S90W				

Note: A reduction ratio will be indicated as ∗∗∗ in the nomenclature.
Note: Please refer to page 73 for the performance table.

G3 Type Parallel Shaft | Shaft Diameter **28** | **Flange** Mounting

The values in parentheses ( ) are the indications for gearmotors with brake.

<Figure 1>

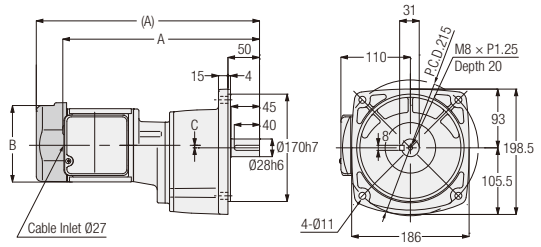

<Figure 2>

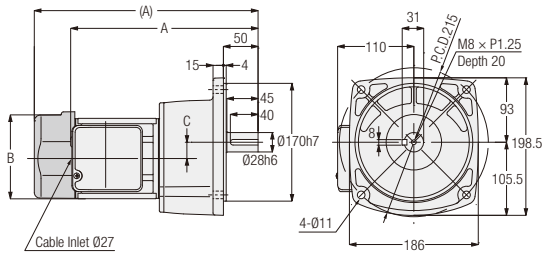

<Figure 3>

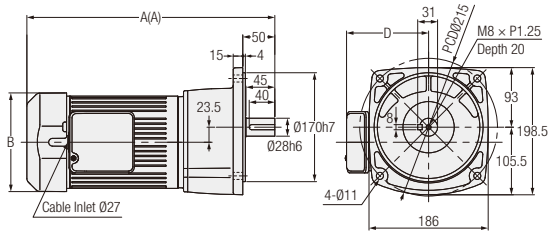

Number of Phases	Power	Part Number	Reduction Ratio	Figure Number	Brake	Approx. Weight (kg)	A	B	C	D
3-Phase	0.1 kW	G3F28N✱✱✱-MM01T◇◇TN	300, 375, 450	1	No	10.5	313.5	Ø115	4	-
		G3F28N✱✱✱-MM01T◇◇TB◆			Yes	12	353.5	□126	4	-
	0.2 kW	G3F28N✱✱✱-MM02T◇◇TN	100, 120, 160, 200	2	No	10	272.5	Ø115	23.5	-
		G3F28N✱✱✱-MM02T◇◇TB◆			Yes	11.5	323	□126	23.5	-
	0.4 kW	G3F28N✱✱✱-MM04T◇◇TN	30, 40, 50, 60, 80, 100	3	No	12	325.5	□137	-	117
		G3F28N✱✱✱-MM04T◇◇TB◆			Yes	13.5	345.5	□137	-	117
	0.75 kW	G3F28N✱✱✱-MR08T◇◇TN	5, 10, 15, 20, 25	3	No	19	368	□154	-	128
		G3F28N✱✱✱-MR08T◇◇TB◆			Yes	21.5	387	□154	-	128

Note: A reduction ratio will be indicated as ✱✱✱ in the nomenclature. In addition, a supply voltage/certification code will be indicated as ◇◇, and a brake specification will be indicated as ◆.

Note: Please refer to page 76 for the performance table.

G3 Type Parallel Shaft | Shaft Diameter **28** | **Flange** Mounting

The values in parentheses ( ) are the indications for gearmotors with brake.

<Figure 1>

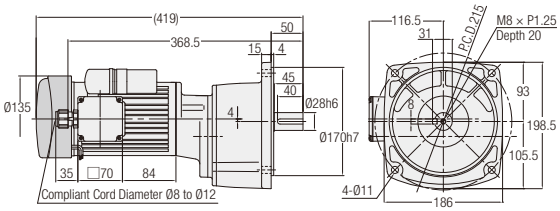

<Figure 2>

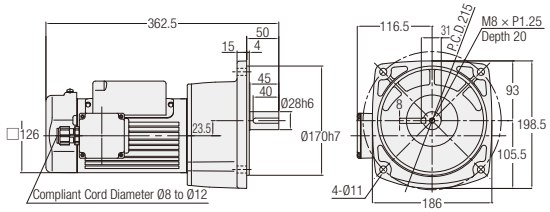

<Figure 3>

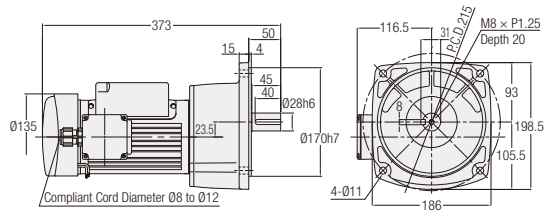

<Figure 4>

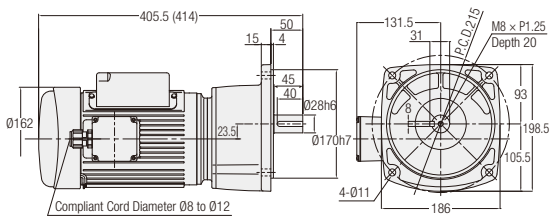

Number of Phases	Power	Part Number	Reduction Ratio	Figure Number	Brake	Approx. Weight (kg)
1-Phase	0.1 kW	G3F28N∗∗∗-MM01C◇JAN	300, 375, 450	1	No	12
		G3F28N∗∗∗-MM01C◇JAB2			Yes	13.5
	0.2 kW	G3F28N∗∗∗-MM02C◇JAN	100, 120, 160, 200	2	No	12
		G3F28N∗∗∗-MM02C◇JAB2		3	Yes	13.5
	0.4 kW	G3F28N∗∗∗-MM04C◇JAN	30, 40, 50, 60, 80, 100	4	No	17.5
		G3F28N∗∗∗-MM04C◇JAB2			Yes	20

Note: A reduction ratio will be indicated as ∗∗∗ in the nomenclature. In addition, a supply voltage code will be indicated as ◇.
Note: Please refer to page 80 for the performance table.

G Type Parallel Shaft | Shaft Diameter **32** | **Flange** Mounting

The values in parentheses ( ) are the indications for gearmotors with brake.

<Figure 1>

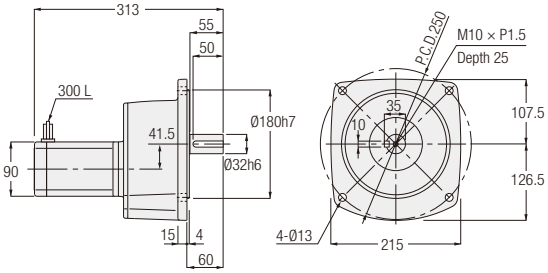

<Figure 2>

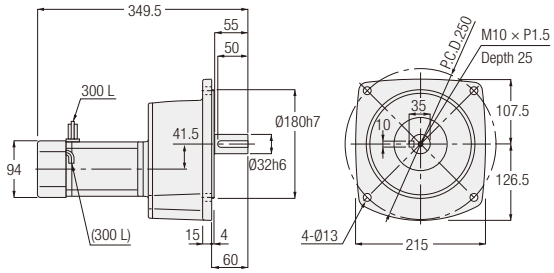

Number of Phases	Power	Part Number	Reduction Ratio	Figure Number	Brake	Approx. Weight (kg)
3-Phase	40 W	GFM-32-∗∗∗-T40	1200, 1500, 1800	1	No	11
		GFM-32-∗∗∗-T40W				
		GFMN-32-∗∗∗-T40	1200, 1500, 1800	2	Yes	11
		GFMN-32-∗∗∗-T40W				
	60 W	GFM-32-∗∗∗-T60	1200, 1500, 1800	1	No	11
		GFM-32-∗∗∗-T60W				
		GFMN-32-∗∗∗-T60	1200, 1500, 1800	2	Yes	11
		GFMN-32-∗∗∗-T60W				
	90 W	GFM-32-∗∗∗-T90	600, 750, 900	1	No	11
		GFM-32-∗∗∗-T90W		2		
		GFMN-32-∗∗∗-T90	600, 750, 900	2	Yes	11
		GFMN-32-∗∗∗-T90W				
1-Phase	40 W	GFM-32-∗∗∗-S40	1200, 1500, 1800	1	No	11
		GFM-32-∗∗∗-S40W				
		GFMN-32-∗∗∗-S40	1200, 1500, 1800	2	Yes	11
		GFMN-32-∗∗∗-S40W				
	60 W	GFM-32-∗∗∗-S60	1200, 1500, 1800	2	No	11
		GFM-32-∗∗∗-S60W				
		GFMN-32-∗∗∗-S60	1200, 1500, 1800	2	Yes	11
		GFMN-32-∗∗∗-S60W				
	90 W	GFM-32-∗∗∗-S90	600, 750, 900	2	No	11
		GFM-32-∗∗∗-S90W				
		GFMN-32-∗∗∗-S90	600, 750, 900	2	Yes	11
		GFMN-32-∗∗∗-S90W				

Note: A reduction ratio will be indicated as ∗∗∗ in the nomenclature.
Note: Please refer to page 74 for the performance table.

G3 Type Parallel Shaft | Shaft Diameter **32** | **Flange** Mounting

The values in parentheses ( ) are the indications for gearmotors with brake.

<Figure 1>

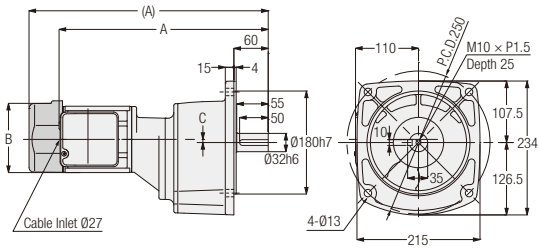

<Figure 2>

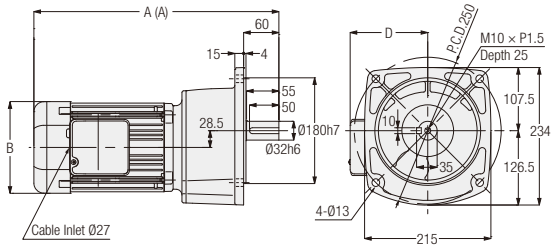

<Figure 3>

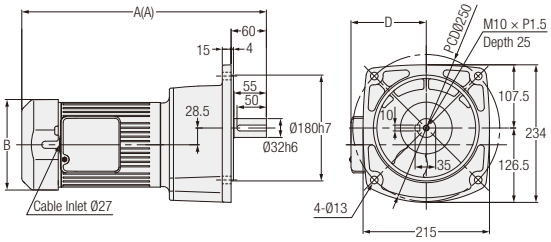

Number of Phases	Power	Part Number	Reduction Ratio	Figure Number	Brake	Approx. Weight (kg)	A	B	C	D
3-Phase	0.1 kW	G3F32N∗∗∗-MM01T◇◇TN	600, 750, 900, 1200	1	No	13.5	332.5	Ø115	-1	-
		G3F32N∗∗∗-MM01T◇◇TB◆			Yes	15	372.5	□126	-1	-
	0.2 kW	G3F32N∗∗∗-MM02T◇◇TN	300, 375, 450	1	No	14	367.5	Ø115	5.5	-
		G3F32N∗∗∗-MM02T◇◇TB◆			Yes	15.5	418	□126	5.5	-
	0.4 kW	G3F32N∗∗∗-MM04T◇◇TN	100, 120, 160, 200	2	No	15	344.5	□137	-	117
		G3F32N∗∗∗-MM04T◇◇TB◆			Yes	16.5	364.5	□137	-	117
	0.75 kW	G3F32N∗∗∗-MR08T◇◇TN	30, 40, 50, 60, 80, 100	3	No	22.5	397	□154	-	128
		G3F32N∗∗∗-MR08T◇◇TB◆			Yes	25	416	□154	-	128
	1.5 kW	G3F32N∗∗∗-MR15T◇◇TN	5, 10, 15, 20, 25	3	No	28.5	433	□178	-	139
		G3F32N∗∗∗-MR15T◇◇TB◆			Yes	32	462	□178	-	139

Note: A reduction ratio will be indicated as ∗∗∗ in the nomenclature. In addition, a supply voltage/certification code will be indicated as ◇◇, and a brake specification will be indicated as ◆.

Note: Please refer to page 76 for the performance table.

G3 Type Parallel Shaft | Shaft Diameter 32 | **Flange** Mounting

The values in parentheses ( ) are the indications for gearmotors with brake.

<Figure 1>

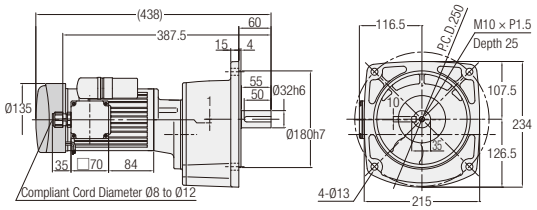

<Figure 2>

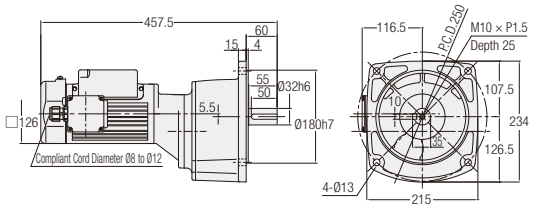

<Figure 3>

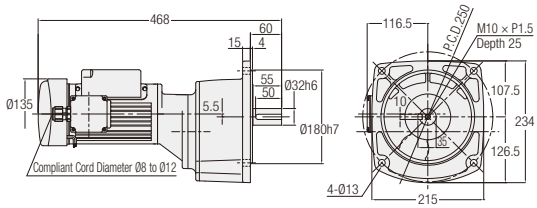

<Figure 4>

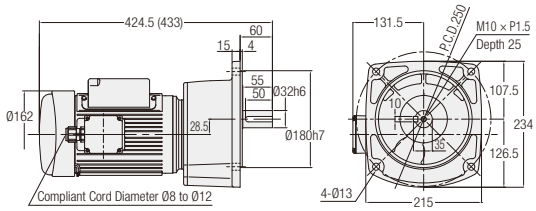

Number of Phases	Power	Part Number	Reduction Ratio	Figure Number	Brake	Approx. Weight (kg)
1-Phase	0.1 kW	G3F32N∗∗∗-MM01C◇JAN	600, 750, 900, 1200	1	No	15
		G3F32N∗∗∗-MM01C◇JAB2			Yes	16.5
	0.2 kW	G3F32N∗∗∗-MM02C◇JAN	300, 375, 450	2	No	16
		G3F32N∗∗∗-MM02C◇JAB2		3	Yes	17.5
	0.4 kW	G3F32N∗∗∗-MM04C◇JAN	100, 120, 160, 200	4	No	20.5
		G3F32N∗∗∗-MM04C◇JAB2			Yes	23

Note: A reduction ratio will be indicated as ∗∗∗ in the nomenclature. In addition, a supply voltage code will be indicated as ◇.
Note: Please refer to page 80 for the performance table.

G Type Parallel Shaft | Shaft Diameter **40** | **Flange** Mounting

The values in parentheses ( ) are the indications for gearmotors with brake.

<Figure 1>

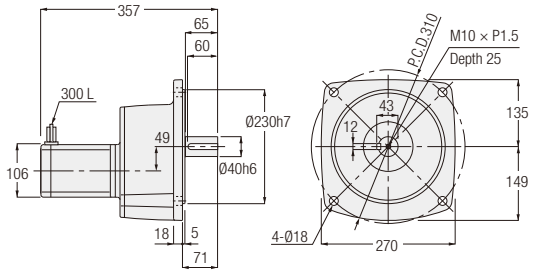

<Figure 2>

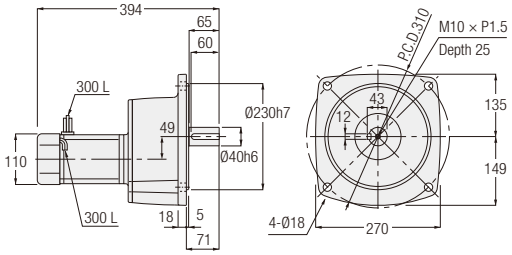

Number of Phases	Power	Part Number	Reduction Ratio	Figure Number	Brake	Approx. Weight (kg)
3-Phase	90 W	GFM-40-∗∗∗-T90	1200, 1500, 1800	1	No	15
		GFM-40-∗∗∗-T90W				
		GFMN-40-∗∗∗-T90	1200, 1500, 1800	2	Yes	15
		GFMN-40-∗∗∗-T90W				
1-Phase	90 W	GFM-40-∗∗∗-S90	1200, 1500, 1800	2	No	15
		GFM-40-∗∗∗-S90W				
		GFMN-40-∗∗∗-S90	1200, 1500, 1800	2	Yes	15
		GFMN-40-∗∗∗-S90W				

Note: A reduction ratio will be indicated as ∗∗∗ in the nomenclature.
Note: Please refer to page 75 for the performance table.

G3 Type Parallel Shaft | Shaft Diameter 40 | **Flange** Mounting

The values in parentheses ( ) are the indications for gearmotors with brake.

<Figure 1>

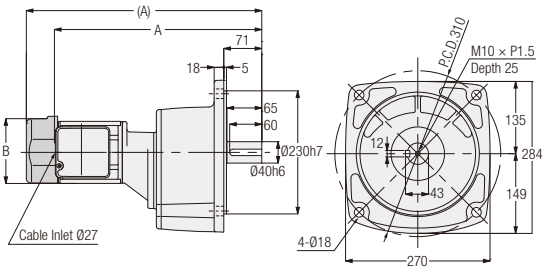

<Figure 2>

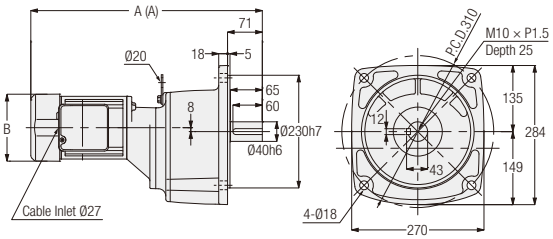

<Figure 3>

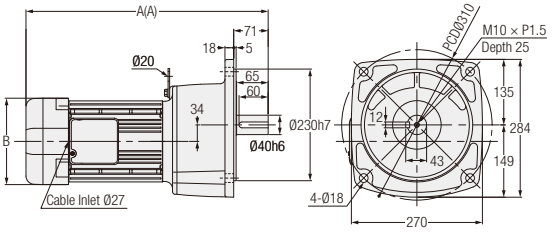

Note: Gearmotors with a motor power of 0.75 kW does not include the hanging plate.

Number of Phases	Power	Part Number	Reduction Ratio	Figure Number	Brake	Approx. Weight (kg)	A	B
3-Phase	0.2 kW	G3F40N∗∗∗-MM02T◇◇TN	600, 750, 900, 1200	1	No	21.5	389.5	Ø115
		G3F40N∗∗∗-MM02T◇◇TB◆			Yes	23	440	□126
	0.4 kW	G3F40N∗∗∗-MM04T◇◇TN	300, 375, 450	2	No	24.5	452.5	□137
		G3F40N∗∗∗-MM04T◇◇TB◆			Yes	26	472.5	□137
	0.75 kW	G3F40N∗∗∗-MR08T◇◇TN	100, 120, 160, 200	3	No	30	419	□154
		G3F40N∗∗∗-MR08T◇◇TB◆			Yes	32.5	438	□154
	1.5 kW	G3F40N∗∗∗-MR15T◇◇TN	30, 40, 50, 60, 80, 100	3	No	36.5	470	□178
		G3F40N∗∗∗-MR15T◇◇TB◆			Yes	40	499	□178
	2.2 kW	G3F40N∗∗∗-MR22T◇◇TN	5, 10, 15, 20, 25	3	No	43	503.5	□192
		G3F40N∗∗∗-MR22T◇◇TB◆			Yes	46.5	532.5	□192

Note: A reduction ratio will be indicated as ∗∗∗ in the nomenclature. In addition, a supply voltage/certification code will be indicated as ◇◇, and a brake specification will be indicated as ◆.

Note: Please refer to page 76 for the performance table.

G3 Type Parallel Shaft | Shaft Diameter 40 | Flange Mounting

<Figure 1>

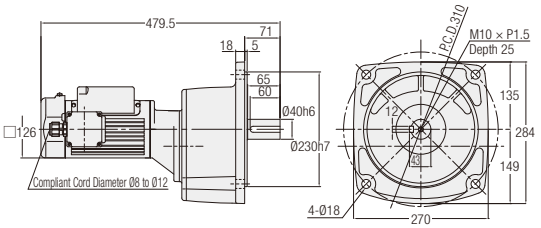

<Figure 2>

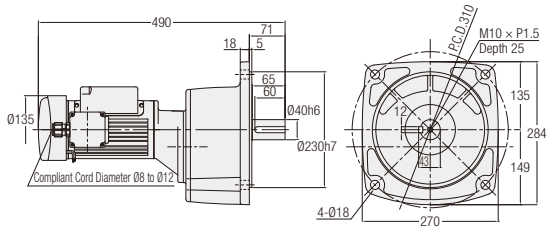

<Figure 3>

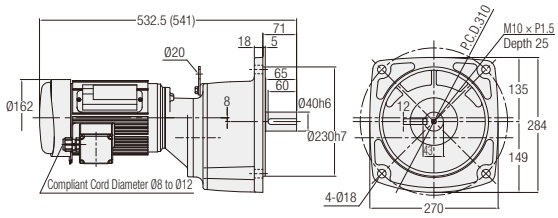

Number of Phases	Power	Part Number	Reduction Ratio	Figure Number	Brake	Approx. Weight (kg)
1-Phase	0.2 kW	G3F40N∗∗∗-MM02C◇JAN	600, 750, 900, 1200	1	No	23.5
		G3F40N∗∗∗-MM02C◇JAB2		2	Yes	25
	0.4 kW	G3F40N∗∗∗-MM04C◇JAN	300, 375, 450	3	No	30
		G3F40N∗∗∗-MM04C◇JAB2			Yes	32.5

Note: A reduction ratio will be indicated as ∗∗∗ in the nomenclature. In addition, a supply voltage code will be indicated as ◇.
Note: Please refer to page 80 for the performance table.

G3 Type Parallel Shaft | Shaft Diameter **50** | **Flange** Mounting

The values in parentheses ( ) are the indications for gearmotors with brake.

<Figure 1>

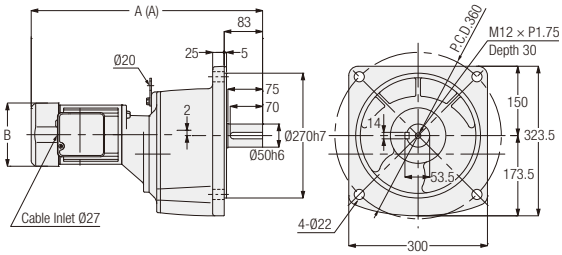

<Figure 2>

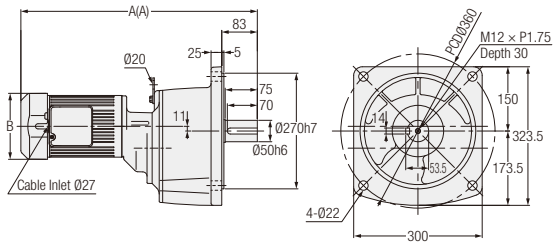

<Figure 3>

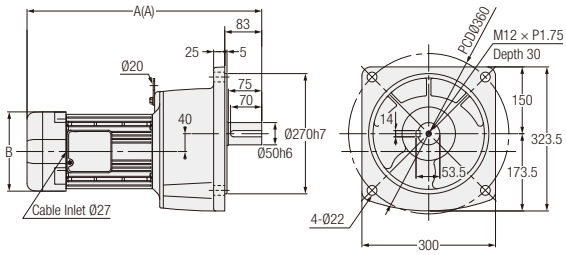

552	Power	Part Number	Reduction Ratio	Figure Number	Brake	Approx. Weight (kg)	A	B
3-Phase	0.4 kW	G3F50N∗∗∗-MM04T◇◇TN	600, 750, 900, 1200	1	No	57.5	480.5	□137
		G3F50N∗∗∗-MM04T◇◇TB◆			Yes	59	500.5	□137
	0.75 kW	G3F50N∗∗∗-MR08T◇◇TN	300, 375, 450	2	No	65	533	□154
		G3F50N∗∗∗-MR08T◇◇TB◆			Yes	67.5	552	□154
	1.5 kW	G3F50N∗∗∗-MR15T◇◇TN	100, 120, 160, 200	3	No	69.5	498	□178
		G3F50N∗∗∗-MR15T◇◇TB◆			Yes	73	527	□178
	2.2 kW	G3F50N∗∗∗-MR22T◇◇TN	30, 40, 50, 60, 80, 100	3	No	76.5	547.5	□192
		G3F50N∗∗∗-MR22T◇◇TB◆			Yes	80	576.5	□192

Note: A reduction ratio will be indicated as ∗∗∗ in the nomenclature. In addition, a supply voltage/certification code will be indicated as ◇◇, and a brake specification will be indicated as ◆.

Note: Please refer to page 77 for the performance table.

G3 Type Parallel Shaft | Shaft Diameter 50 | Flange Mounting

The values in parentheses ( ) are the indications for gearmotors with brake.

<Figure 1>

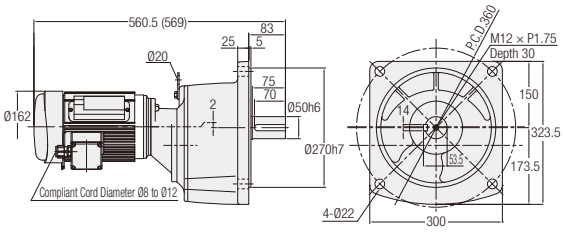

Number of Phases	Power	Part Number	Reduction Ratio	Figure Number	Brake	Approx. Weight (kg)
1-Phase	0.4 kW	G3F50N∗∗∗-MM04C◇JAN	600, 750, 900, 1200	1	No	63
		G3F50N∗∗∗-MM04C◇JAB2			Yes	65.5

Note: A reduction ratio will be indicated as ∗∗∗ in the nomenclature. In addition, a supply voltage code will be indicated as ◇.
Note: Please refer to page 81 for the performance table.

G3 Type Parallel Shaft | Shaft Diameter 18 | Small Flange Mounting

<Figure 2>

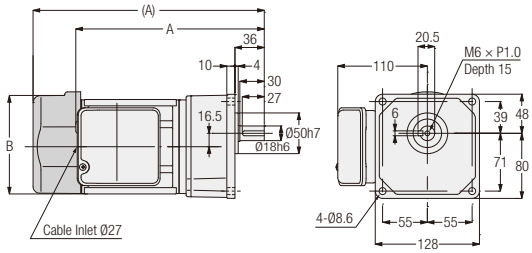

Number of Phases	Power	Part Number	Reduction Ratio	Figure Number	Brake	Approx. Weight (kg)	A	B
3-Phase	0.1 kW	G3K18N∗∗∗-MM01T◇◇TN	5, 10, 15, 20, 25, 30, 40, 50	2	No	6.5	218.5	Ø115
		G3K18N∗∗∗-MM01T◇◇TB◆			Yes	8	258.5	□126
	0.2 kW	G3K18N∗∗∗-MM02T◇◇TN	5, 10, 15, 20, 25	2	No	7	233.5	Ø115
		G3K18N∗∗∗-MM02T◇◇TB◆			Yes	8.5	284	□126

Note: A reduction ratio will be indicated as ∗∗∗ in the nomenclature. In addition, a supply voltage/certification code will be indicated as ◇◇, and a brake specification will be indicated as ◆.
Note: Please refer to page 76 for the performance table.

G3 Type Parallel Shaft | Shaft Diameter **18** | **Small Flange** Mounting

The values in parentheses ( ) are the indications for gearmotors with brake.

<Figure 1>

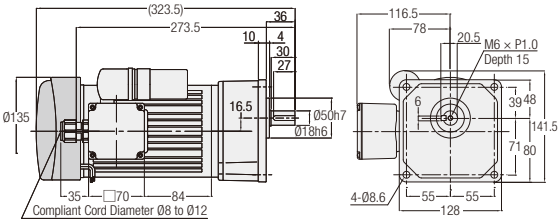

<Figure 2>

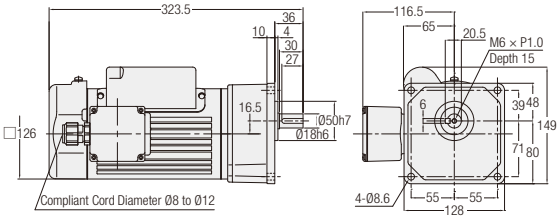

<Figure 3>

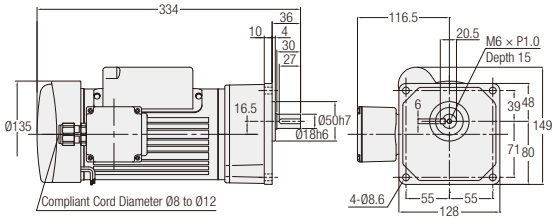

Number of Phases	Power	Part Number	Reduction Ratio	Figure Number	Brake	Approx. Weight (kg)
1-Phase	0.1 kW	G3K18N∗∗∗-MM01C◇JAN	5, 10, 15, 20, 25, 30, 40, 50	1	No	8
		G3K18N∗∗∗-MM01C◇JAB2			Yes	9.5
	0.2 kW	G3K18N∗∗∗-MM02C◇JAN	5, 10, 15, 20, 25	2	No	9
		G3K18N∗∗∗-MM02C◇JAB2		3	Yes	10.5

Note: A reduction ratio will be indicated as ∗∗∗ in the nomenclature. In addition, a supply voltage code will be indicated as ◇.
Note: Please refer to page 80 for the performance table.

G Type Parallel Shaft | Shaft Diameter **22** | **Small Flange** Mounting

The values in parentheses ( ) are the indications for gearmotors with brake.

<Figure 1>

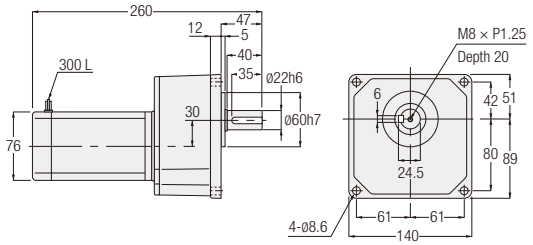

<Figure 2>

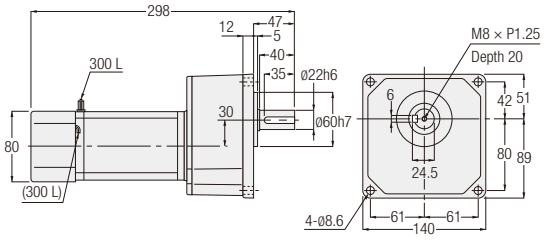

Number of Phases	Power	Part Number	Reduction Ratio	Figure Number	Brake	Approx. Weight (kg)
3-Phase	15 W	GKM-22-∗∗∗-T15	300, 375, 450, 600, 750, 900, 1200, 1500, 1800	1	No	5
		GKM-22-∗∗∗-T15W				
		GKMN-22-∗∗∗-T15	300, 375, 450, 600, 750, 900, 1200, 1500, 1800	2	Yes	5
		GKMN-22-∗∗∗-T15W				
	25 W	GKM-22-∗∗∗-T25	300, 375, 450, 600, 750, 900	1	No	5
		GKM-22-∗∗∗-T25W				
		GKMN-22-∗∗∗-T25	300, 375, 450, 600, 750, 900	2	Yes	5
		GKMN-22-∗∗∗-T25W				
	40 W	GKM-22-∗∗∗-T40	300, 375, 450	1	No	5
		GKM-22-∗∗∗-T40W		2		
		GKMN-22-∗∗∗-T40	300, 375, 450	2	Yes	5
		GKMN-22-∗∗∗-T40W				
	60 W	GKM-22-∗∗∗-T60	300, 375, 450	2	No	5
		GKM-22-∗∗∗-T60W				
		GKMN-22-∗∗∗-T60	300, 375, 450	2	Yes	5
		GKMN-22-∗∗∗-T60W				
1-Phase	15 W	GKM-22-∗∗∗-S15	300, 375, 450, 600, 750, 900, 1200, 1500, 1800	1	No	5
		GKM-22-∗∗∗-S15W				
		GKMN-22-∗∗∗-S15	300, 375, 450, 600, 750, 900, 1200, 1500, 1800	2	Yes	5
		GKMN-22-∗∗∗-S15W				
	25 W	GKM-22-∗∗∗-S25	300, 375, 450, 600, 750, 900	1	No	5
		GKM-22-∗∗∗-S25W				
		GKMN-22-∗∗∗-S25	300, 375, 450, 600, 750, 900	2	Yes	5
		GKMN-22-∗∗∗-S25W				
	40 W	GKM-22-∗∗∗-S40	300, 375, 450	2	No	5
		GKM-22-∗∗∗-S40W				
		GKMN-22-∗∗∗-S40	300, 375, 450	2	Yes	5
		GKMN-22-∗∗∗-S40W				
	60 W	GKM-22-∗∗∗-S60	300, 375, 450	2	No	5
		GKM-22-∗∗∗-S60W				
		GKMN-22-∗∗∗-S60	300, 375, 450	2	Yes	5
		GKMN-22-∗∗∗-S60W				

Note: A reduction ratio will be indicated as ∗∗∗ in the nomenclature.
Note: Please refer to page 73 for the performance table.

G3 Type Parallel Shaft | Shaft Diameter 22 | **Small Flange** Mounting

The values in parentheses ( ) are the indications for gearmotors with brake.

<Figure 1>

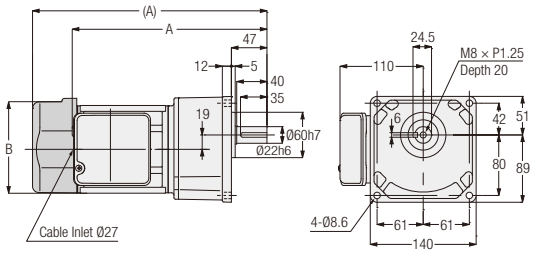

<Figure 2>

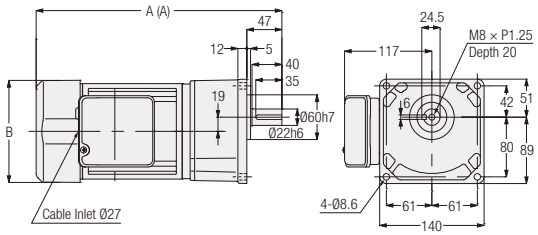

Number of Phases	Power	Part Number	Reduction Ratio	Figure Number	Brake	Approx. Weight (kg)	A	B
3-Phase	0.1 kW	G3K22N∗∗∗-MM01T◇◇TN	60, 80, 100, 120, 160, 200	1	No	7.5	244.5	Ø115
		G3K22N∗∗∗-MM01T◇◇TB◆			Yes	9	284.5	□126
	0.2 kW	G3K22N∗∗∗-MM02T◇◇TN	30, 40, 50, 60, 80, 100	1	No	8	259.5	Ø115
		G3K22N∗∗∗-MM02T◇◇TB◆			Yes	9.5	310	□126
	0.4 kW	G3K22N∗∗∗-MM04T◇◇TN	5, 10, 15, 20, 25	2	No	10	309.5	□137
		G3K22N∗∗∗-MM04T◇◇TB◆			Yes	11.5	329.5	□137

Note: A reduction ratio will be indicated as ∗∗∗ in the nomenclature. In addition, a supply voltage/certification code will be indicated as ◇◇, and a brake specification will be indicated as ◆.

Note: Please refer to page 76 for the performance table.

G3 Type Parallel Shaft | Shaft Diameter **22** | **Small Flange** Mounting

The values in parentheses ( ) are the indications for gearmotors with brake.

<Figure 1>

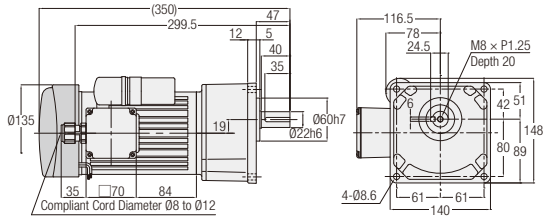

<Figure 2>

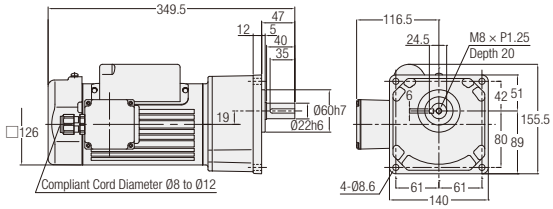

<Figure 3>

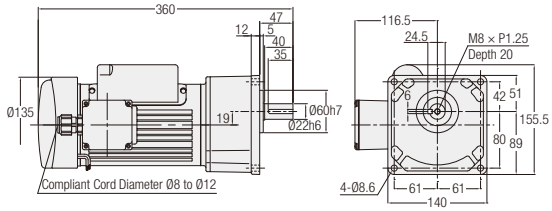

<Figure 4>

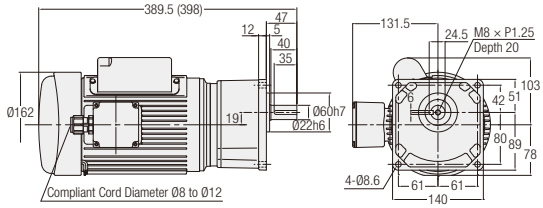

Number of Phases	Power	Part Number	Reduction Ratio	Figure Number	Brake	Approx. Weight (kg)
1-Phase	0.1 kW	G3K22N∗∗∗-MM01C◇JAN	60, 80, 100, 120, 160, 200	1	No	9
		G3K22N∗∗∗-MM01C◇JAB2			Yes	10.5
	0.2 kW	G3K22N∗∗∗-MM02C◇JAN	30, 40, 50, 60, 80, 100	2	No	10
		G3K22N∗∗∗-MM02C◇JAB2		3	Yes	11.5
	0.4 kW	G3K22N∗∗∗-MM04C◇JAN	5, 10, 15, 20, 25	4	No	15.5
		G3K22N∗∗∗-MM04C◇JAB2			Yes	18

Note: A reduction ratio will be indicated as ∗∗∗ in the nomenclature. In addition, a supply voltage code will be indicated as ◇.
Note: Please refer to page 80 for the performance table.

G Type Parallel Shaft | Shaft Diameter **28** | **Small Flange** Mounting

The values in parentheses ( ) are the indications for gearmotors with brake.

<Figure 1>

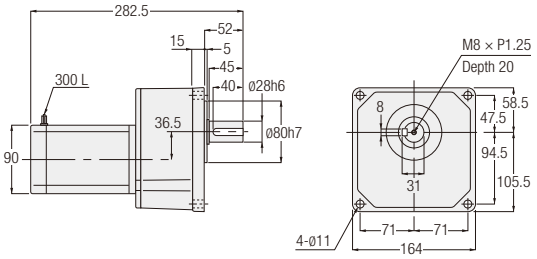

<Figure 2>

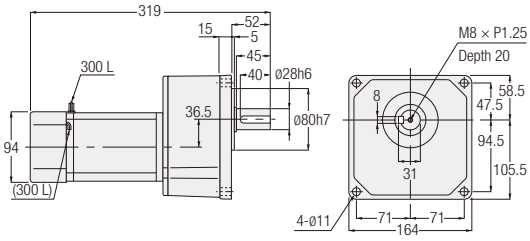

Number of Phases	Power	Part Number	Reduction Ratio	Figure Number	Brake	Approx. Weight (kg)
3-Phase	25 W	GKM-28-***-T25	1200, 1500, 1800	1	No	7
		GKM-28-***-T25W				
		GKMN-28-***-T25	1200, 1500, 1800	2	Yes	7
		GKMN-28-***-T25W				
	40 W	GKM-28-***-T40	600, 750, 900	1	No	7
		GKM-28-***-T40W				
		GKMN-28-***-T40	600, 750, 900	2	Yes	7
		GKMN-28-***-T40W				
	60 W	GKM-28-***-T60	600, 750, 900	1	No	7
		GKM-28-***-T60W				
		GKMN-28-***-T60	600, 750, 900	2	Yes	7
		GKMN-28-***-T60W				
	90 W	GKM-28-***-T90	300, 375, 450	1	No	7
		GKM-28-***-T90W		2		
		GKMN-28-***-T90	300, 375, 450	2	Yes	7
		GKMN-28-***-T90W				
1-Phase	25 W	GKM-28-***-S25	1200, 1500, 1800	1	No	7
		GKM-28-***-S25W				
		GKMN-28-***-S25	1200, 1500, 1800	2	Yes	7
		GKMN-28-***-S25W				
	40 W	GKM-28-***-S40	600, 750, 900	1	No	7
		GKM-28-***-S40W				
		GKMN-28-***-S40	600, 750, 900	2	Yes	7
		GKMN-28-***-S40W				
	60 W	GKM-28-***-S60	600, 750, 900	2	No	7
		GKM-28-***-S60W				
		GKMN-28-***-S60	600, 750, 900	2	Yes	7
		GKMN-28-***-S60W				
	90 W	GKM-28-***-S90	300, 375, 450	2	No	7
		GKM-28-***-S90W				
		GKMN-28-***-S90	300, 375, 450	2	Yes	7
		GKMN-28-***-S90W				

Note: A reduction ratio will be indicated as *** in the nomenclature.
Note: Please refer to page 73 for the performance table.

G3 Type Parallel Shaft | Shaft Diameter **28** | **Small Flange** Mounting

The values in parentheses ( ) are the indications for gearmotors with brake.

<Figure 1>

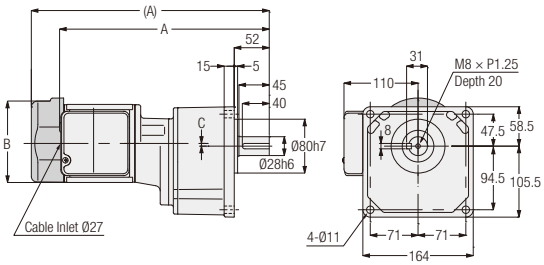

<Figure 2>

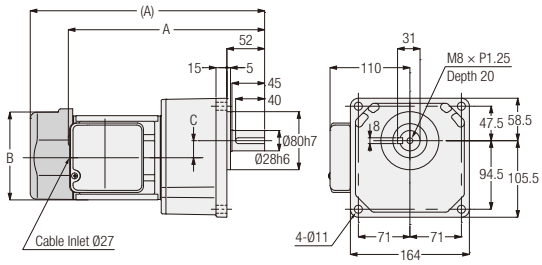

<Figure 3>

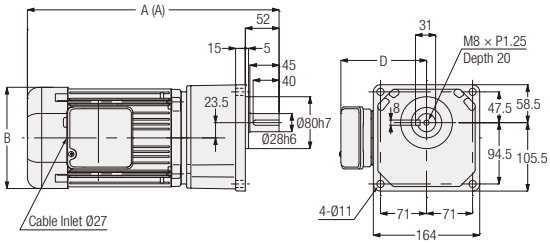

<Figure 4>

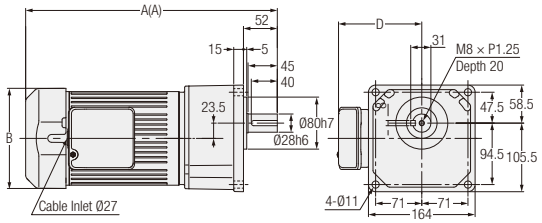

Number of Phases	Power	Part Number	Reduction Ratio	Figure Number	Brake	Approx. Weight (kg)	A	B	C	D
3-Phase	0.1 kW	G3K28N∗∗∗-MM01T◇◇TN	300, 375, 450	1	No	10.5	313.5	Ø115	4	-
		G3K28N∗∗∗-MM01T◇◇TB◆			Yes	12	353.5	□126	4	-
	0.2 kW	G3K28N∗∗∗-MM02T◇◇TN	100, 120, 160, 200	2	No	10	272.5	Ø115	23.5	-
		G3K28N∗∗∗-MM02T◇◇TB◆			Yes	11.5	323	□126	23.5	-
	0.4 kW	G3K28N∗∗∗-MM04T◇◇TN	30, 40, 50, 60, 80, 100	3	No	12	325.5	□137	-	117
		G3K28N∗∗∗-MM04T◇◇TB◆			Yes	13.5	345.5	□137	-	117
	0.75 kW	G3K28N∗∗∗-MR08T◇◇TN	5, 10, 15, 20, 25	4	No	19	368	□154	-	128
		G3K28N∗∗∗-MR08T◇◇TB◆			Yes	22.5	387	□154	-	128

Note: A reduction ratio will be indicated as ∗∗∗ in the nomenclature. In addition, a supply voltage/certification code will be indicated as ◇◇, and a brake specification will be indicated as ◆.

Note: Please refer to page 76 for the performance table.

G3 Type Parallel Shaft | Shaft Diameter **28** | **Small Flange** Mounting

The values in parentheses ( ) are the indications for gearmotors with brake.

<Figure 1>

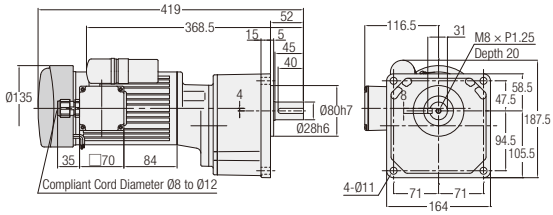

<Figure 2>

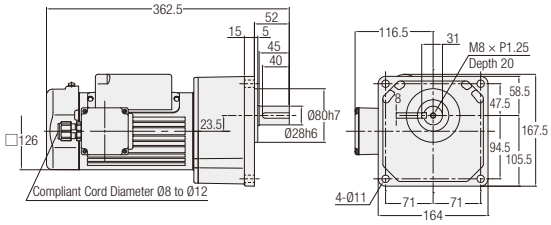

<Figure 3>

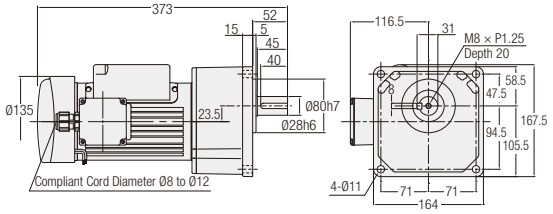

<Figure 4>

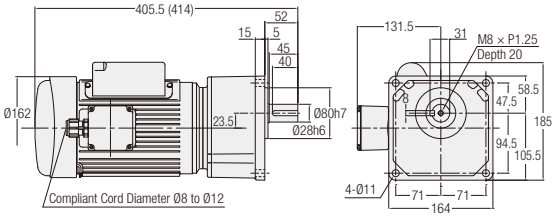

Number of Phases	Power	Part Number	Reduction Ratio	Figure Number	Brake	Approx. Weight (kg)
1-Phase	0.1 kW	G3K28N∗∗∗-MM01C◇JAN	300, 375, 450	1	No	12
		G3K28N∗∗∗-MM01C◇JAB2			Yes	13.5
	0.2 kW	G3K28N∗∗∗-MM02C◇JAN	100, 120, 160, 200	2	No	12
		G3K28N∗∗∗-MM02C◇JAB2		3	Yes	13.5
	0.4 kW	G3K28N∗∗∗-MM04C◇JAN	30, 40, 50, 60, 80, 100	4	No	17.5
		G3K28N∗∗∗-MM04C◇JAB2			Yes	20

Note: A reduction ratio will be indicated as ∗∗∗ in the nomenclature. In addition, a supply voltage code will be indicated as ◇.
Note: Please refer to page 80 for the performance table.

G Type Parallel Shaft | Shaft Diameter **32** | **Small Flange** Mounting

The values in parentheses ( ) are the indications for gearmotors with brake.

<Figure 1>

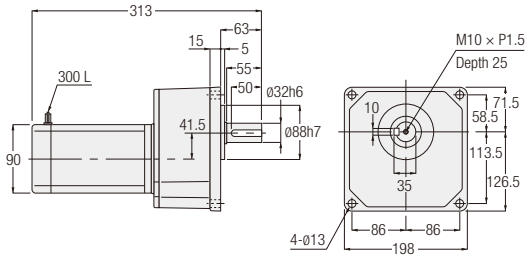

<Figure 2>

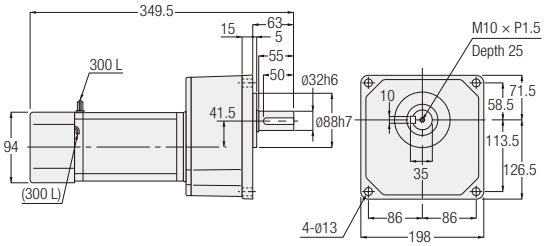

Number of Phases	Power	Part Number	Reduction Ratio	Figure Number	Brake	Approx. Weight (kg)
3-Phase	40 W	GKM-32-***-T40	1200, 1500, 1800	1	No	11
		GKM-32-***-T40W				
		GKMN-32-***-T40	1200, 1500, 1800	2	Yes	11
		GKMN-32-***-T40W				
	60 W	GKM-32-***-T60	1200, 1500, 1800	1	No	11
		GKM-32-***-T60W				
		GKMN-32-***-T60	1200, 1500, 1800	2	Yes	11
		GKMN-32-***-T60W				
	90 W	GKM-32-***-T90	600, 750, 900	1	No	11
		GKM-32-***-T90W		2		
		GKMN-32-***-T90	600, 750, 900	2	Yes	11
		GKMN-32-***-T90W				
1-Phase	40 W	GKM-32-***-S40	1200, 1500, 1800	1	No	11
		GKM-32-***-S40W				
		GKMN-32-***-S40	1200, 1500, 1800	2	Yes	11
		GKMN-32-***-S40W				
	60 W	GKM-32-***-S60	1200, 1500, 1800	2	No	11
		GKM-32-***-S60W				
		GKMN-32-***-S60	1200, 1500, 1800	2	Yes	11
		GKMN-32-***-S60W				
	90 W	GKM-32-***-S90	600, 750, 900	2	No	11
		GKM-32-***-S90W				
		GKMN-32-***-S90	600, 750, 900	2	Yes	11
		GKMN-32-***-S90W				

Note: A reduction ratio will be indicated as *** in the nomenclature.
Note: Please refer to page 74 for the performance table.

G3 Type Parallel Shaft | Shaft Diameter 32 | **Small Flange** Mounting

The values in parentheses ( ) are the indications for gearmotors with brake.

<Figure 1>

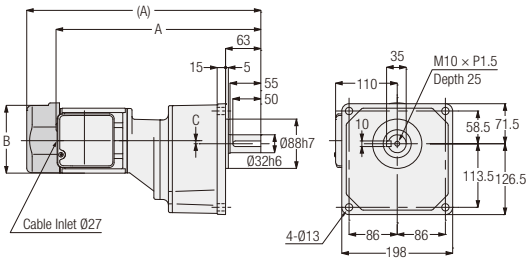

<Figure 2>

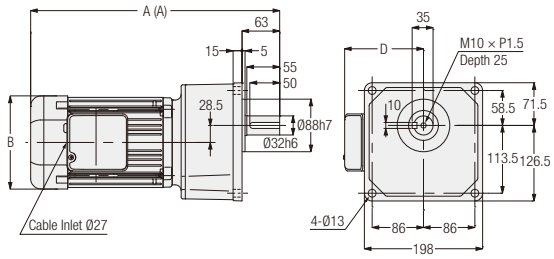

<Figure 3>

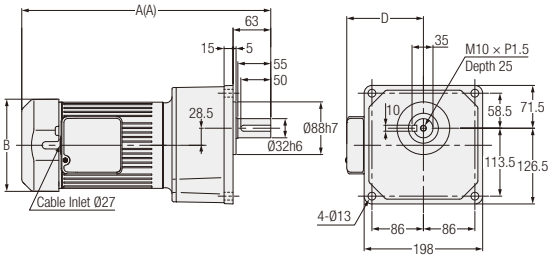

Number of Phases	Power	Part Number	Reduction Ratio	Figure Number	Brake	Approx. Weight (kg)	A	B	C	D
3-Phase	0.1 kW	G3K32N∗∗∗-MM01T◇◇TN	600, 750, 900, 1200	1	No	13.5	332.5	Ø115	-1	-
		G3K32N∗∗∗-MM01T◇◇TB◆			Yes	15	372.5	□126	-1	-
	0.2 kW	G3K32N∗∗∗-MM02T◇◇TN	300, 375, 450	1	No	14	367.5	Ø115	5.5	-
		G3K32N∗∗∗-MM02T◇◇TB◆			Yes	15.5	418	□126	5.5	-
	0.4 kW	G3K32N∗∗∗-MM04T◇◇TN	100, 120, 160, 200	2	No	15	344.5	□137	-	117
		G3K32N∗∗∗-MM04T◇◇TB◆			Yes	16.5	364.5	□137	-	117
	0.75 kW	G3K32N∗∗∗-MR08T◇◇TN	30, 40, 50, 60, 80, 100	3	No	22.5	397	□154	-	128
		G3K32N∗∗∗-MR08T◇◇TB◆			Yes	25	416	□154	-	128
	1.5 kW	G3K32N∗∗∗-MR15T◇◇TN	5, 10, 15, 20, 25	3	No	28.5	433	□178	-	139
		G3K32N∗∗∗-MR15T◇◇TB◆			Yes	32	462	□178	-	139

Note: A reduction ratio will be indicated as ∗∗∗ in the nomenclature. In addition, a supply voltage/certification code will be indicated as ◇◇, and a brake specification will be indicated as ◆.

Note: Please refer to page 76 for the performance table.

G3 Type Parallel Shaft | Shaft Diameter **32** | **Small Flange** Mounting

The values in parentheses ( ) are the indications for gearmotors with brake.

<Figure 1>

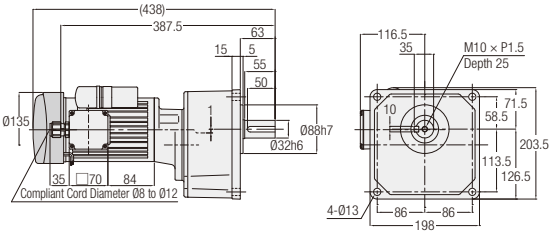

<Figure 2>

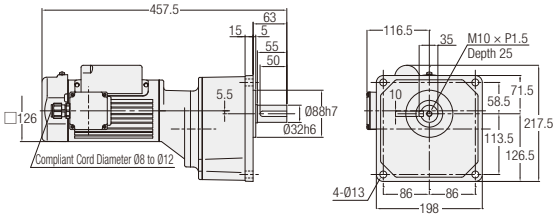

<Figure 3>

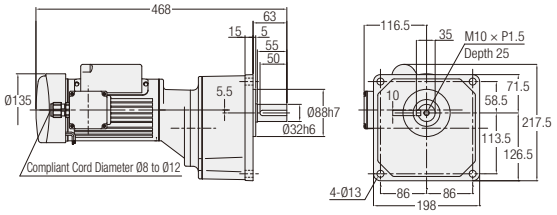

<Figure 4>

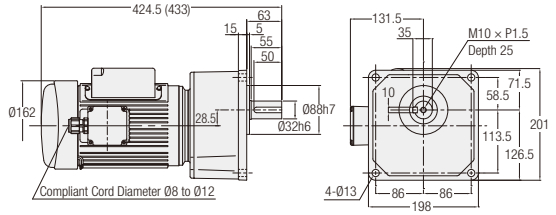

Number of Phases	Power	Part Number	Reduction Ratio	Figure Number	Brake	Approx. Weight (kg)
1-Phase	0.1 kW	G3K32N∗∗∗-MM01C◇JAN	600, 750, 900, 1200	1	No	15
		G3K32N∗∗∗-MM01C◇JAB2			Yes	16.5
	0.2 kW	G3K32N∗∗∗-MM02C◇JAN	300, 375, 450	2	No	16
		G3K32N∗∗∗-MM02C◇JAB2		3	Yes	17.5
	0.4 kW	G3K32N∗∗∗-MM04C◇JAN	100, 120, 160, 200	4	No	20.5
		G3K32N∗∗∗-MM04C◇JAB2			Yes	23

Note: A reduction ratio will be indicated as ∗∗∗ in the nomenclature. In addition, a supply voltage code will be indicated as ◇.
Note: Please refer to page 80 for the performance table.

2. IP65 Gearmotors
IP65 Gearmotors with Brake

2-1. Motor Characteristics Table

G Type 3-Phase Standard Voltage

Series	Power (W)	Voltage (V)	Frequency (Hz)	Frame Size	Rated Current (A)	Rated Speed (r/min)	Startup Current (A)
MINI	15	200/200/220	50/60/60	12	0.14/0.13/0.13	1350/1550/1600	0.30/0.28/0.31
	25	200/200/220	50/60/60	12	0.21/0.19/0.19	1350/1550/1600	0.44/0.42/0.46
				15	0.18/0.17/0.17	1350/1550/1600	0.43/0.41/0.46
	40	200/200/220	50/60/60	12	0.29/0.27/0.27	1350/1550/1600	0.67/0.62/0.68
				15	0.27/0.26/0.26	1350/1550/1550	0.73/0.69/0.76
				18	0.21/0.21/0.21	1350/1550/1600	0.66/0.64/0.70
	60	200/200/220	50/60/60	15	0.40/0.36/0.36	1350/1550/1600	1.04/0.97/1.07
				18	0.33/0.33/0.33	1350/1550/1600	1.06/1.01/1.11
	90	200/200/220	50/60/60	18	0.47/0.47/0.47	1350/1550/1600	1.59/1.51/1.66

G Type 1-Phase Standard Voltage

Series	Power (W)	Voltage (V)	Frequency (Hz)	Frame Size	Rated Current (A)	Rated Speed (r/min)	Startup Current (A)	Capacitor (μF)
MINI	15	100/100	50/60	12	0.39/0.35	1350/1650	0.72/0.67	5
	25	100/100	50/60	12	0.48/0.48	1350/1600	0.86/0.80	7
				15	0.44/0.45	1350/1650	1.00/0.92	7
	40	100/100	50/60	15	0.61/0.66	1350/1650	1.43/1.36	10
				18	0.63/0.64	1400/1650	2.16/2.00	10
	60	100/100	50/60	18	0.90/1.00	1400/1650	2.55/2.37	15

The rated current in the motor characteristics table is the current data for the motor operating without a gearbox.
With regard to gearmotors with a brake, it is necessary to consider the current value flowing through the brake as needed.
For more details, please contact your nearest Sales Office or the CS Center.

G Type 3-Phase Standard Voltage/High Voltage (400 V Class)/Special Voltage

Series	Power	Power Supply/ Certification Codes	Voltage (V)	Frequency (Hz)	Rated Current (A)	Startup Current (A)	Rated Speed (r/min)
MID	0.1kW	NN	200/200/220	50/60/60	0.61/0.54/0.54	2.39/2.27/2.52	1410/1690/1710
		WN	380/400/400/440	50/50/60/60	0.31/0.31/0.28/0.28	1.12/1.18/1.12/1.22	1400/1410/1690/1720
		KN	220/380	60/60	0.52/0.30	1.90/1.10	1680/1680
		CN	220/230/380	50/50/50	0.55/0.54/0.31	1.94/2.03/1.12	1400/1410/1400
		DN	220/220/380/380	50/60/50/60	0.55/0.52/0.31/0.30	1.94/1.90/1.12/1.10	1400/1680/1400/1680
		EN	415/440/480	50/50/60	0.30/0.29/0.26	1.06/1.12/1.17	1390/1420/1720
		AN	208/230/460/400	60/60/60/50	0.54/0.57/0.29/0.31	2.35/2.62/1.26/1.21	1690/1730/1730/1410
		MA	575	60	0.20	0.87	1700
	0.2kW IE2	NN	200/200/220	50/60/60	1.1/1.0/1.0	4.70/4.35/4.85	1400/1680/1700
		WN	380/400/400/440	50/50/60/60	0.56/0.56/0.50/0.50	2.29/2.38/2.29/2.48	1390/1400/1680/1710
		KN	220/380	60/60	0.93/0.52	3.70/2.20	1680/1680
		CN	220/230/380	50/50/50	0.99/0.98/0.56	3.97/4.15/2.29	1400/1410/1390
		DN	220/220/380/380	50/60/50/60	0.99/0.93/0.56/0.52	3.97/3.70/2.29/2.20	1400/1680/1390/1680
		EN	415/440/480	50/50/60	0.50/0.50/0.45	1.75/1.86/2.00	1370/1400/1700
		AN	208/230/460/400	60/60/60/50	1.0/1.0/0.50/0.56	4.78/5.16/2.56/2.44	1680/1720/1720/1400
		MA	575	60	0.40	1.78	1710
	0.4kW IE2	NN	200/200/220	50/60/60	2.1/1.8/1.8	9.60/8.54/9.21	1400/1680/1700
		WN	380/400/400/440	50/50/60/60	1.0/1.0/0.9/0.9	4.43/4.64/4.24/4.85	1390/1400/1680/1710
		KN	220/380	60/60	1.7/1.0	7.10/4.09	1670/1670
		CN	220/230/380	50/50/50	1.8/1.8/1.0	7.63/8.04/4.43	1390/1400/1390
		DN	220/220/380/380	50/60/50/60	1.8/1.7/1.0/1.0	7.63/7.10/4.43/4.09	1390/1670/1390/1670
		EN	415/440/480	50/50/60	0.96/0.95/0.82	4.45/4.56/4.52	1390/1410/1680
		AN	208/230/460/400	60/60/60/50	1.8/1.8/0.9/1.0	9.21/9.82/5.06/4.62	1680/1720/1720/1400
		MA	575	60	0.68	3.94	1700
	0.75 kW IE3	NN	200/200/220	50/60/60	3.5/3.2/3.1	21.8/19.0/21.1	1450/1740/1750
		WN	380/400/400/440	50/50/60/60	1.73/1.72/1.58/1.54	10.2/10.8/9.8/10.7	1440/1450/1740/1750
		KN	220/380	60/60	2.9/1.7	16.9/9.8	1740/1740
		CN	220/230/380	50/50/50	3.0/3.0/1.7	17.8/18.7/10.3	1450/1450/1440
		DN	220/220/380/380	50/60/50/60	3.1/2.9/1.8/1.7	19.3/16.9/11.2/9.8	1450/1740/1450/1740
		EN	415/440/480	50/50/60	1.54/1.52/1.36	8.6/9.3/9.0	1440/1450/1750
		UN	230/460/400	60/60/50	3.1/1.5/1.7	22.3/11.2/10.8	1760/1760/1450
		MA	575	60	1.16	7.2	1750
	1.5kW IE3	NN	200/200/220	50/60/60	6.7/6.1/5.9	45.6/40.3/45.1	1450/1740/1760
		WN	380/400/400/440	50/50/60/60	3.4/3.4/3.1/3.0	21.9/23.2/20.4/22.8	1450/1450/1750/1760
		KN	220/380	60/60	5.9/3.4	45.1/25.8	1760/1760
		CN	220/230/380	50/50/50	5.9/5.9/3.4	38.5/40.4/22.1	1450/1450/1450
		EN	415/440/480	50/50/60	3.1/3.1/2.8	20.8/22.2/21.2	1450/1460/1760
		UN	230/460/400	60/60/50	5.9/2.9/3.3	44.9/22.6/23.2	1760/1760/1450
		MA	575	60	2.2	17.0	1760
	2.2kW IE3	NN	200/200/220	50/60/60	9.3/8.6/8.2	70.3/56.9/63.7	1470/1760/1770
		WN	380/400/400/440	50/50/60/60	4.5/4.4/4.2/3.9	30.0/32.0/25.0/28.0	1440/1450/1740/1750
		KN	220/380	60/60	8.3/4.8	65.0/38.0	1770/1770
		CN	220/230/380	50/50/50	7.9/7.7/4.5	52.0/54.3/30.0	1460/1470/1440
		EN	415/440/480	50/50/60	4.3/4.3/3.8	33.1/35.5/29.8	1460/1470/1770
		UN	230/460/400	60/60/50	7.9/4.0/4.5	65.2/34.8/36.3	1770/1770/1470
		MA	575	60	3.3	24.4	1760

The rated current in the motor characteristics table is the current data for the motor operating without a gearbox.
With regard to gearmotors with a brake, it is necessary to consider the current value flowing through the brake as needed.
For more details, please contact your nearest Sales Office or the CS Center.

GA Type 3-Phase Standard Voltage/High Voltage (400 V Class)/Special Voltage

Series	Power	Power Supply/ Certification Codes	Voltage (V)	Frequency (Hz)	Rated Current (A)	Startup Current (A)	Rated Speed (r/min)
MID	0.4kW IE2	NN	200/200/220	50/60/60	2.1/1.8/1.8	9.60/8.54/9.21	1400/1680/1700
		WN	380/400/400/440	50/50/60/60	1.0/1.0/0.9/0.9	4.43/4.64/4.24/4.85	1390/1400/1680/1710
		KN	220/380	60/60	1.7/1.0	7.10/4.09	1670/1670
		CN	220/230/380	50/50/50	1.8/1.8/1.0	7.63/8.04/4.43	1390/1400/1390
		DN	220/220/380/380	50/60/50/60	1.8/1.7/1.0/1.0	7.63/7.10/4.43/4.09	1390/1670/1390/1670
		EN	415/440/480	50/50/60	0.96/0.95/0.82	4.45/4.56/4.52	1390/1410/1680
		AN	208/230/460/400	60/60/60/50	1.8/1.8/0.9/1.0	9.21/9.82/5.06/4.62	1680/1720/1720/1400
		MA	575	60	0.68	3.94	1700
	0.75 kW IE3	NN	200/200/220	50/60/60	3.5/3.2/3.1	21.8/19.0/21.1	1450/1740/1750
		WN	380/400/400/440	50/50/60/60	1.73/1.72/1.58/1.54	10.2/10.8/9.8/10.7	1440/1450/1740/1750
		KN	220/380	60/60	2.9/1.7	16.9/9.8	1740/1740
		CN	220/230/380	50/50/50	3.0/3.0/1.7	17.8/18.7/10.3	1450/1450/1440
		DN	220/220/380/380	50/60/50/60	3.1/2.9/1.8/1.7	19.3/16.9/11.2/9.8	1450/1740/1450/1740
		EN	415/440/480	50/50/60	1.54/1.52/1.36	8.6/9.3/9.0	1440/1450/1750
		UN	230/460/400	60/60/50	3.1/1.5/1.7	22.3/11.2/10.8	1760/1760/1450
		MA	575	60	1.16	7.2	1750
	1.5kW IE3	NN	200/200/220	50/60/60	6.7/6.1/5.9	45.6/40.3/45.1	1450/1740/1760
		WN	380/400/400/440	50/50/60/60	3.4/3.4/3.1/3.0	21.9/23.2/20.4/22.8	1450/1450/1750/1760
		KN	220/380	60/60	5.9/3.4	45.1/25.8	1760/1760
		CN	220/230/380	50/50/50	5.9/5.9/3.4	38.5/40.4/22.1	1450/1450/1450
		EN	415/440/480	50/50/60	3.1/3.1/2.8	20.8/22.2/21.2	1450/1460/1760
		UN	230/460/400	60/60/50	5.9/2.9/3.3	44.9/22.6/23.2	1760/1760/1450
		MA	575	60	2.2	17.0	1760
	2.2kW IE3	NN	200/200/220	50/60/60	9.3/8.6/8.2	70.3/56.9/63.7	1470/1760/1770
		WN	380/400/400/440	50/50/60/60	4.5/4.4/4.2/3.9	30.0/32.0/25.0/28.0	1440/1450/1740/1750
		KN	220/380	60/60	8.3/4.8	65.0/38.0	1770/1770
		CN	220/230/380	50/50/50	7.9/7.7/4.5	52.0/54.3/30.0	1460/1470/1440
		EN	415/440/480	50/50/60	4.3/4.3/3.8	33.1/35.5/29.8	1460/1470/1770
		UN	230/460/400	60/60/50	7.9/4.0/4.5	65.2/34.8/36.3	1770/1770/1470
		MA	575	60	3.3	24.4	1760

The rated current in the motor characteristics table is the current data for the motor operating without a gearbox.
With regard to gearmotors with a brake, it is necessary to consider the current value flowing through the brake as needed.
For more details, please contact your nearest Sales Office or the CS Center.

2-2. Performance Table

G Type IP65 Gearmotors/IP65 Gearmotors with Brake

[Notes]

- The values in parentheses ( ) in the drawings are the indications for gearmotors with brake.
- The values in brackets [ ] in the drawings are the indications for carbon steel output shafts.
- The output shaft speed is the value relative to the synchronous speed of the motor and the reduction ratio.
- Allowable output shaft O.H.L. is the value at the middle of the output shaft.
- The "*" mark indicates a limited torque type. Please make sure to check the allowable output shaft torque in the performance table.
- In the performance table, the reduction ratio in ▭ indicates that when the connection is made as shown on page 564 (CW), the direction of rotation is clockwise in the case of a three-phase motor or counterclockwise in the case of a single-phase motor when viewed from the output shaft side. (Refer to the figure on the right)

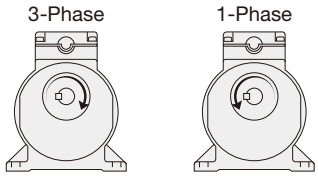

Series	Motor Power	Frame Size	Reduction Ratio	Actual Reduction Ratio	Output Shaft Speed r/min 50 Hz	Output Shaft Speed r/min 60 Hz	Allowable Output Shaft Torque N·m	Allowable Output Shaft O.H.L. N	Drawings Foot Mount	Drawings Flange Mount
MINI	15 W	12	1/5	1/5	300	360	0.29	98	P.142	P.150
			1/7.5	1/7.5	200	240	0.49	196		
			1/10	1/10	150	180	0.69	245		
			1/15	1/15	100	120	0.98	343		
			1/20	1/20	75	90	1.27	441		
			1/25	1/25	60	72	1.67	490		
			1/30	1/29	50	60	1.96	539		
			1/40	1/40	37.5	45	2.65	588		
			1/50	1/50	30	36	3.33	637		
			1/60	1/58	25	30	3.92	686		
			1/80	1/80	18.8	22.5	5.00	735		
			1/100	1/100	15	18	6.27	735		
			1/120	1/120	12.5	15	7.45	784		
			1/160	1/160	9.4	11.2	9.80	784		
			1/200	1/200	7.5	9	12.7	784		
			1/240	1/232	6.3	7.5	14.7	784		
	25 W	12	1/5	1/5	300	360	0.59	98	P.142	P.150
			1/7.5	1/7.5	200	240	0.78	196		
			1/10	1/10	150	180	1.08	245		
			1/15	1/15	100	120	1.67	343		
			1/20	1/20	75	90	2.25	441		
			1/25	1/25	60	72	2.74	490		
			1/30	1/29	50	60	3.33	539		
			1/40	1/40	37.5	45	4.41	588		
			1/50	1/50	30	36	5.49	637		
			1/60	1/58	25	30	6.66	686		
			1/80	1/80	18.8	22.5	8.43	735		
			1/100	1/100	15	18	10.8	735		
			1/120	1/120	12.5	15	12.7	784		
		15	1/160	1/160	9.4	11.2	16.7	1080	P.142	P.150
			1/200	1/200	7.5	9	20.6	1080		
			1/240	1/232	6.3	7.5	25.5	1080		
	40 W	12	1/5	1/5	300	360	0.88	98	P.142	P.150
			1/7.5	1/7.5	200	240	1.37	196		
			1/10	1/10	150	180	1.76	245		
			1/15	1/15	100	120	2.65	343		
			1/20	1/20	75	90	3.53	441		
			1/25	1/25	60	72	4.41	490		
			1/30	1/29	50	60	5.29	539		
			1/40	1/40	37.5	45	7.06	588		
			1/50	1/50	30	36	8.82	637		
			1/60	1/58	25	30	10.8	686		
		15	1/80	1/80	18.8	22.5	13.7	980	P.142	P.150
			1/100	1/100	15	18	16.7	980		
			1/120	1/120	12.5	15	20.6	1080		
		18	1/160	1/160	9.4	11.2	26.5	1370	P.143	P.151
			1/200	1/200	7.5	9	33.3	1370		
			1/240	1/240	6.3	7.5	40.2	1370		

2-2. Performance Table

Series	Motor Power	Frame Size	Reduction Ratio	Actual Reduction Ratio	Output Shaft Speed r/min 50 Hz	Output Shaft Speed r/min 60 Hz	Allowable Output Shaft Torque N·m	Allowable Output Shaft O.H.L. N	Drawings Foot Mount	Drawings Flange Mount
MINI	60 W	15	1/5	1/5	300	360	1.37	98	P.142	P.150
			1/7.5	1/7.5	200	240	2.06	196		
			1/10	1/10	150	180	2.74	245		
			1/15	1/15	100	120	4.12	343		
			1/20	1/20	75	90	5.49	441		
			1/25	1/25	60	72	6.96	490		
			1/30	1/29	50	60	8.33	539		
			1/40	1/40	37.5	45	10.8	784		
			1/50	1/50	30	36	13.7	882		
			1/60	1/58	25	30	16.7	882		
		18	1/80	1/80	18.8	22.5	20.6	1270	P.143	P.151
			1/100	1/100	15	18	26.5	1270		
			1/120	1/120	12.5	15	31.4	1370		
			1/160	1/160	9.4	11.2	42.1	1370		
			1/200	1/200	7.5	9	52.9	1370		
			* 1/240	1/240	6.3	7.5	53.9	1370		
	90 W	18	1/5	1/5	300	360	2.06	147	P.143	P.151
			1/7.5	1/7.5	200	240	3.14	245		
			1/10	1/10	150	180	4.12	343		
			1/15	1/15	100	120	6.17	441		
			1/20	1/20	75	90	8.33	539		
			1/25	1/25	60	72	10.8	588		
			1/30	1/29	50	60	12.7	686		
			1/40	1/40	37.5	45	16.7	1080		
			1/50	1/50	30	36	20.6	1180		
			1/60	1/60	25	30	24.5	1180		
			1/80	1/80	18.8	22.5	31.4	1270		
			1/100	1/100	15	18	39.2	1270		
			1/120	1/120	12.5	15	47.0	1370		
			* 1/160	1/160	9.4	11.2	53.9	1370		
			* 1/200	1/200	7.5	9	53.9	1370		
			* 1/240	1/240	6.3	7.5	53.9	1370		

G3 Type IP65 Gearmotors/IP65 Gearmotors with Brake

[Notes]
- The values in parentheses ( ) in the drawings are the indications for gearmotors with brake.
- The values in brackets [ ] in the drawings are the indications for carbon steel output shafts.
- The output shaft speed is the value relative to the synchronous speed of the motor and the reduction ratio.
- ▭ in the performance table indicates that the shaft rotates clockwise when viewed from the output shaft side when the connection is made as shown on page 566 (CW). (Refer to the figure on the right)
- Allowable output shaft O.H.L. is the value at the middle of the output shaft.
- The "*" mark indicates a limited torque type. Please make sure to check the allowable output shaft torque in the performance table.

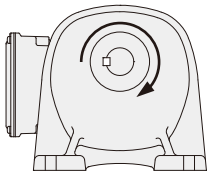

Series	Motor Power	Frame Size	Reduction Ratio	Actual Reduction Ratio	Output Shaft Speed r/min 50 Hz	Output Shaft Speed r/min 60 Hz	Allowable Output Shaft Torque N·m 50 Hz	Allowable Output Shaft Torque N·m 60 Hz	Allowable Output Shaft O.H.L. N	Drawings Foot Mount	Drawings Flange Mount	Drawings Small Flange Mount
MID	3-Phase 0.1 kW	18	1/5	33/164	300	360	3	2.5	770	P.143	P.151	P.157
			1/10	77/779	150	180	6.1	5	1140			
			1/15	119/1804	100	120	9.1	7.5	1270			
			1/20	49/984	75	90	12	9.8	1530			
			1/25	28/697	60	72	15	12.7	1650			
			1/30	35/1066	50	60	19	14.7	1780			
			1/40	35/1404	37.5	45	24	19.6	1910			
			1/50	7/351	30	36	29	24.5	2040			
		22	1/60	11/684	25	30	35	29.4	2800	P.144	P.152	P.158
			1/80	21/1634	18.8	22.5	47	39.2	3180			
			1/100	7/684	15	18	59	49	3180			
			1/120	147/17974	12.5	15	71	58.8	3180			
			1/160	21/3268	9.4	11.2	94	78.4	3180			
			1/200	21/4085	7.5	9	117	98	3180			
		28	1/300	221/65190	5	6	157	130	3430	P.145	P.153	P.159
			1/375	187/68370	4	4.8	196	163	3430			
			1/450	1183/521520	3.3	4	235	196	3430			
		32	1/600	147/88192	2.5	3	313	261	5880	P.146	P.154	P.160
			1/750	49/36464	2	2.4	391	326	5880			
			* 1/900	62/57063	1.7	2	431	391	5880			
			* 1/1200	46/55195	1.3	1.5	431	431	5880			
	3-Phase 0.2 kW	18	1/5	33/164	300	360	6.1	5	770	P.143	P.151	P.157
			1/10	77/779	150	180	11.8	9.8	1140			
			1/15	119/1804	100	120	18.6	14.7	1270			
			1/20	49/984	75	90	24.5	20.6	1450			
			1/25	28/697	60	72	30.4	25.5	1550			
		22	1/30	7/216	50	60	36.3	30.4	2280	P.144	P.152	P.158
			1/40	91/3600	37.5	45	47	39.2	2410			
			1/50	11/540	30	36	58.8	49	2540			
			1/60	637/39600	25	30	70.6	58.8	2800			
			1/80	91/7200	18.8	22.5	94.1	78.4	3000			
			* 1/100	11/1080	15	18	97	80.4	3180			
		28	1/100	13/1353	15	18	117	98	3690	P.145	P.153	P.159
			1/120	91/11000	12.5	15	140	117	4320			
			1/160	1/165	9.4	11.2	187	156	4450			
			1/200	7/1375	7.5	9	234	195	4450			
		32	1/300	91/27348	5	6	313	261	5880	P.146	P.154	P.160
			1/375	77/28620	4	4.8	391	326	5880			
			1/450	91/41022	3.3	4	431	391	5880			
		40	1/600	9/5300	2.5	3	626	521	7060	P.147	P.155	-
			* 1/750	62/46427	2	2.4	764	653	7060			
			* 1/900	23/21259	1.7	2	764	764	7060			
			* 1/1200	9/10600	1.3	1.5	764	764	7060			

2-2. Performance Table

Series	Motor Power	Frame Size	Reduction Ratio	Actual Reduction Ratio	Output Shaft Speed r/min 50 Hz	Output Shaft Speed r/min 60 Hz	Allowable Output Shaft Torque N·m 50 Hz	Allowable Output Shaft Torque N·m 60 Hz	Allowable Output Shaft O.H.L. N	Drawings Foot Mount	Drawings Flange Mount	Drawings Small Flange Mount
MID	3-Phase 0.4 kW	22	1/5	7/34	300	360	12	10	1140	P.144	P.152	P.158
			1/10	7/68	150	180	25	21	1530			
			1/15	49/748	100	120	36	30	1780			
			1/20	7/136	75	90	48	40	1910			
			1/25	7/170	60	72	61	50	2050			
		28	1/30	1/30	50	60	73	61	3310	P.145	P.153	P.159
			1/40	221/8610	37.5	45	94	78	3690			
			1/50	187/9030	30	36	117	98	4080			
			1/60	169/9840	25	30	140	117	4450			
			1/80	65/5166	18.8	22.5	187	156	4450			
			* 1/100	55/5418	15	18	193	161	4450			
		32	1/100	7/688	15	18	234	195	6370	P.146	P.154	P.160
			1/120	77/9360	12.5	15	281	234	7640			
			1/160	21/3328	9.4	11.2	374	313	7640			
			1/200	189/38272	7.5	9	431	390	7640			
		40	1/300	7/2160	5	6	626	521	7060	P.147	P.155	-
			* 1/375	77/29328	4	4.8	764	653	7060			
			* 1/450	49/21600	3.3	4	764	764	7060			
		50	* 1/600	57/35360	2.5	3	1225	1044	9800	P.148	P.156	-
			* 1/750	25/19448	2	2.4	1225	1225	9800			
			* 1/900	5/4338	1.7	2	1225	1225	9800			
			* 1/1200	33/40664	1.3	1.5	1225	1225	9800			
	3-Phase 0.75 kW	28	1/5	91/459	300	360	23	19	1650	P.145	P.153	P.159
			1/10	1/10	150	180	45	38	2280			
			1/15	91/1360	100	120	68	57	2800			
			1/20	5/102	75	90	91	75	3050			
			1/25	7/170	60	72	114	94	3180			
		32	1/30	3/92	50	60	136	114	5220	P.146	P.154	P.160
			1/40	13/516	37.5	45	175	146	5470			
			1/50	11/540	30	36	220	183	5780			
			1/60	13/774	25	30	264	220	6080			
			1/80	13/1032	18.8	22.5	351	293	6180			
			* 1/100	11/1080	15	18	362	302	6770			
		40	1/100	91/9000	15	18	439	366	9170	P.147	P.155	-
			1/120	77/9400	12.5	15	527	439	9170			
			1/160	9/1400	9.4	11.2	703	585	9170			
			1/200	9/1750	7.5	9	764	732	9170			
		50	1/300	211/62013	5	6	1176	978	9800	P.148	P.156	-
			* 1/375	94/36103	4	4.8	1225	1225	9800			
			* 1/450	65/29167	3.3	4	1225	1225	9800			

Series	Motor Power	Frame Size	Reduction Ratio	Actual Reduction Ratio	Output Shaft Speed		Allowable Output Shaft Torque		Allowable Output Shaft O.H.L.	Drawings		
					r/min		N·m			Foot Mount	Flange Mount	Small Flange Mount
					50 Hz	60 Hz	50 Hz	60 Hz	N			
MID	3-Phase 1.5 kW	32	1/5	1/5	300	360	45	38	2280	P.146	P.154	P.160
			1/10	1/10	150	180	91	75	3180			
			1/15	1/15	100	120	136	114	3690			
			1/20	1/20	75	90	181	151	4190			
			1/25	9/230	60	72	226	189	4410			
		40	1/30	1/30	50	60	272	226	6600	P.147	P.155	-
			1/40	13/540	37.5	45	351	293	6960			
			1/50	11/564	30	36	439	366	6960			
			1/60	91/5400	25	30	527	439	7210			
			1/80	13/1080	18.8	22.5	703	585	7400			
			* 1/100	11/1128	15	18	724	603	7400			
		50	1/100	25/2618	15	18	878	732	12500	P.148	P.156	-
			1/120	77/8993	12.5	15	1060	878	12500			
			* 1/160	33/5474	9.4	11.2	1230	1170	12500			
			* 1/200	30/5831	7.5	9	1230	1230	12500			
	3-Phase 2.2 kW	40	1/5	7/36	300	360	67	56	2800	P.147	P.155	-
			1/10	7/72	150	180	133	111	4080			
			1/15	49/720	100	120	200	167	4580			
			1/20	7/144	75	90	266	221	5220			
			1/25	7/180	60	72	332	277	6110			
		50	1/30	5/154	50	60	399	332	9040	P.148	P.156	-
			1/40	399/15488	37.5	45	515	429	9420			
			1/50	399/20240	30	36	644	537	10000			
			1/60	49/2904	25	30	773	644	10000			
			1/80	49/3795	18.8	22.5	1029	858	10100			
			* 1/100	21/2116	15	18	1230	1080	10100			

Note 1: Please be sure to read the notes on page 138.

GA Type IP65 Gearmotors/IP65 Gearmotors with Brake

[Notes]
- The values in parentheses ( ) in the drawings are the indications for gearmotors with brake.
- The values in brackets [ ] in the drawings are the indications for carbon steel output shafts.
- The output shaft speed is the value relative to the synchronous speed of the motor and the reduction ratio.
- ▭ in the performance table indicates that the shaft rotates clockwise when viewed from the output shaft side when the connection is made as shown on page 566 (CW). (Refer to the figure on the right)
- Allowable output shaft O.H.L. is the value at the middle of the output shaft.
- The "*" mark indicates a limited torque type. Please make sure to check the allowable output shaft torque in the performance table.

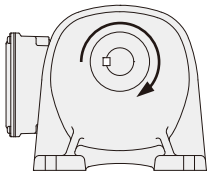

Series	Motor Power	Frame Size	Reduction Ratio	Actual Reduction Ratio	Output Shaft Speed r/min 50 Hz	Output Shaft Speed r/min 60 Hz	Allowable Output Shaft Torque N·m 50 Hz	Allowable Output Shaft Torque N·m 60 Hz	Allowable Output Shaft O.H.L. N	Drawings Foot Mount	Drawings Flange Mount	Drawings Small Flange Mount
MID	3-Phase 0.4 kW	50	* 1/600	57/35360	2.5	3	1225	1044	9800	P.149	-	-
			* 1/750	25/19448	2	2.4	1225	1225	9800			
			* 1/900	5/4338	1.7	2	1225	1225	9800			
			* 1/1200	33/40664	1.3	1.5	1225	1225	9800			
	3-Phase 0.75 kW	50	1/300	211/62013	5	6	1176	978	9800	P.149	-	-
			* 1/375	94/36103	4	4.8	1225	1225	9800			
			* 1/450	65/29167	3.3	4	1225	1225	9800			
	3-Phase 1.5 kW	50	1/100	25/2618	15	18	878	732	12500	P.149	-	-
			1/120	77/8993	12.5	15	1060	878	12500			
			* 1/160	33/5474	9.4	11.2	1230	1170	12500			
			* 1/200	30/5831	7.5	9	1230	1230	12500			
	3-Phase 2.2 kW	50	1/30	5/154	50	60	399	332	9040	P.149	-	-
			1/40	399/15488	37.5	45	515	429	9420			
			1/50	399/20240	30	36	644	537	10000			
			1/60	49/2904	25	30	773	644	10000			
			1/80	49/3795	18.8	22.5	1029	858	10100			
			* 1/100	21/2116	15	18	1230	1080	10100			

2-3. Drawings

G Type Parallel Shaft | Shaft Diameter 12 | **Foot** Mounting

The values in parentheses ( ) are the indications for gearmotors with brake.

<Figure 1>

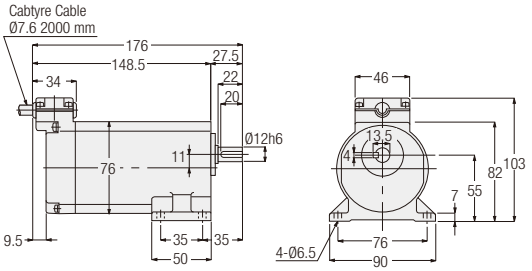

<Figure 2>

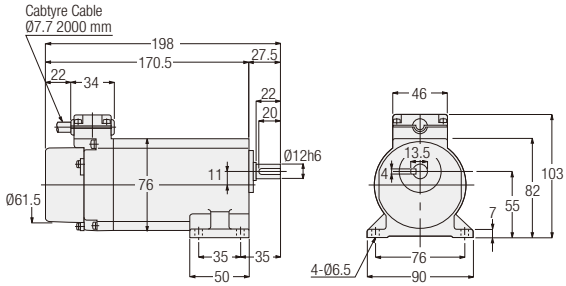

Number of Phases	Power	Part Number	Reduction Ratio	Figure Number	Brake	Approx. Weight (kg)
3-Phase	15 W	GLW-12-∗∗∗-T15	5, 7.5, 10, 15, 20, 25, 30, 40, 50, 60, 80, 100, 120, 160, 200, 240	1	No	2
		GLV-12-∗∗∗-T15		2	Yes	
	25 W	GLW-12-∗∗∗-T25	5, 7.5, 10, 15, 20, 25, 30, 40, 50, 60, 80, 100, 120	1	No	2
		GLV-12-∗∗∗-T25		2	Yes	
	40 W	GLW-12-∗∗∗-T40	5, 7.5, 10, 15, 20, 25, 30, 40, 50, 60	1	No	2
		GLV-12-∗∗∗-T40		2	Yes	
1-Phase	15 W	GLW-12-∗∗∗-S15	5, 7.5, 10, 15, 20, 25, 30, 40, 50, 60, 80, 100, 120, 160, 200, 240	1	No	2
		GLV-12-∗∗∗-S15		2	Yes	
	25 W	GLW-12-∗∗∗-S25	5, 7.5, 10, 15, 20, 25, 30, 40, 50, 60, 80, 100, 120	1	No	2
		GLV-12-∗∗∗-S25		2	Yes	

Note: A reduction ratio will be indicated as ∗∗∗ in the nomenclature.
Note: Please refer to page 136 for the performance table.

G Type Parallel Shaft | Shaft Diameter 15 | **Foot** Mounting

<Figure 3>

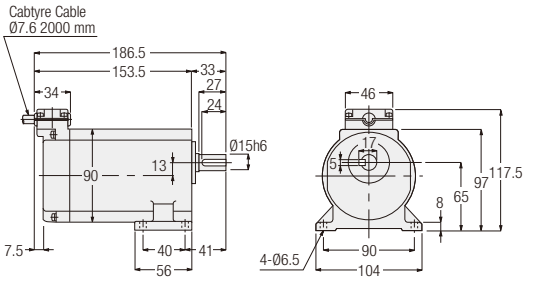

<Figure 4>

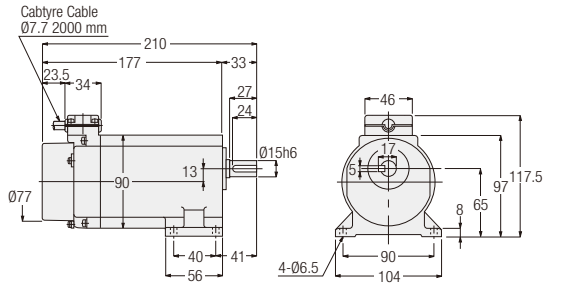

Number of Phases	Power	Part Number	Reduction Ratio	Figure Number	Brake	Approx. Weight (kg)
3-Phase	25 W	GLW-15-∗∗∗-T25	160, 200, 240	3	No	3
		GLV-15-∗∗∗-T25		4	Yes	
	40 W	GLW-15-∗∗∗-T40	80, 100, 120	3	No	3
		GLV-15-∗∗∗-T40		4	Yes	
	60 W	GLW-15-∗∗∗-T60	5, 7.5, 10, 15, 20, 25, 30, 40, 50, 60	3	No	3
		GLV-15-∗∗∗-T60		4	Yes	
1-Phase	25 W	GLW-15-∗∗∗-S25	160, 200, 240	3	No	3
		GLV-15-∗∗∗-S25		4	Yes	
	40 W	GLW-15-∗∗∗-S40	5, 7.5, 10, 15, 20, 25, 30, 40, 50, 60, 80, 100, 120	3	No	3
		GLV-15-∗∗∗-S40		4	Yes	

Note: A reduction ratio will be indicated as ∗∗∗ in the nomenclature.
Note: Please refer to page 136 for the performance table.

G Type Parallel Shaft | Shaft Diameter 18 | Foot Mounting

The values in parentheses ( ) are the indications for gearmotors with brake.
The values in brackets [ ] are the indications for carbon steel output shafts.

<Figure 1>

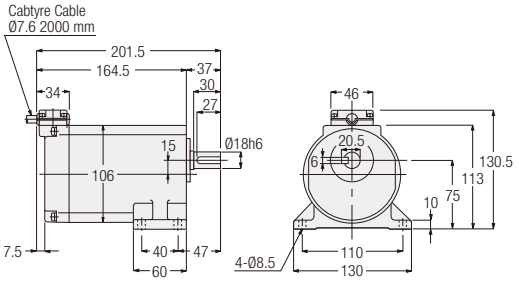

<Figure 2>

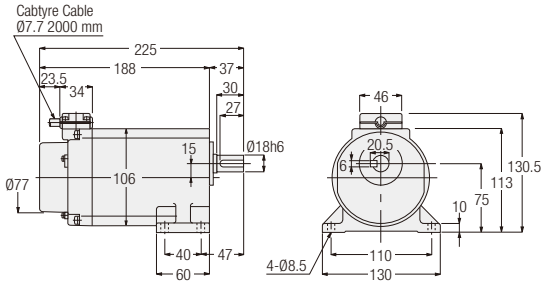

Number of Phases	Power	Part Number	Reduction Ratio	Figure Number	Brake	Approx. Weight (kg)
3-Phase	40 W	GLW-18-∗∗∗-T40	160, 200, 240	1	No	4
		GLV-18-∗∗∗-T40		2	Yes	
	60 W	GLW-18-∗∗∗-T60	80, 100, 120, 160, 200, 240	1	No	4
		GLV-18-∗∗∗-T60		2	Yes	
	90 W	GLW-18-∗∗∗-T90	5, 7.5, 10, 15, 20, 25, 30, 40, 50, 60, 80, 100, 120, 160, 200, 240	1	No	4
		GLV-18-∗∗∗-T90		2	Yes	
1-Phase	40 W	GLW-18-∗∗∗-S40	160, 200, 240	1	No	4
		GLV-18-∗∗∗-S40		2	Yes	
	60 W	GLW-18-∗∗∗-S60	5, 7.5, 10, 15, 20, 25, 30, 40, 50, 60, 80, 100, 120, 160, 200, 240	1	No	4
		GLV-18-∗∗∗-S60		2	Yes	

Note: A reduction ratio will be indicated as ∗∗∗ in the nomenclature.
Note: Please refer to page 136 for the performance table.

G3 Type Parallel Shaft | Shaft Diameter 18 | Foot Mounting

<Figure 3>

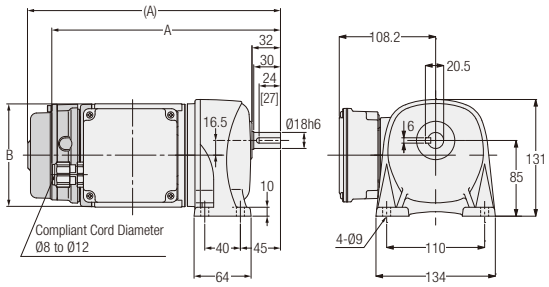

<Figure 4>

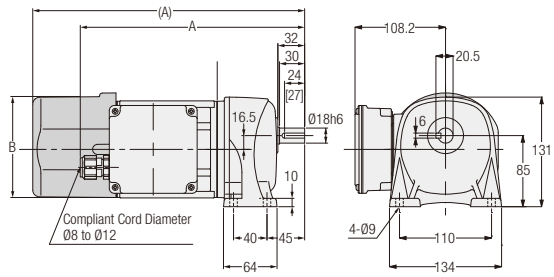

Number of Phases	Power	Output Shaft: Stainless Steel	Output Shaft: Carbon Steel	Reduction Ratio	Figure Number	Brake	Approx. Weight (kg)	A	B
3-Phase	0.1 kW	G3L18S∗∗∗-WM01T◇◇EN	G3L18N∗∗∗-WM01T◇◇EN	5, 10, 15, 20, 25, 30, 40, 50	3	No	6	253.5	Ø115
		G3L18S∗∗∗-WM01T◇◇EV◆	G3L18N∗∗∗-WM01T◇◇EV◆			Yes	7.5	281	Ø115
	0.2 kW	G3L18S∗∗∗-WM02T◇◇EN	G3L18N∗∗∗-WM02T◇◇EN	5, 10, 15, 20, 25	4	No	6.5	268.5	Ø115
		G3L18S∗∗∗-WM02T◇◇EV◆	G3L18N∗∗∗-WM02T◇◇EV◆			Yes	8	325	□126

Note: A reduction ratio will be indicated as ∗∗∗ in the nomenclature. In addition, a supply voltage/certification code will be indicated as ◇◇, and a brake specification will be indicated as ◆.
Note: Please refer to page 138 for the performance table.
Note: For the dimensions of the output shaft key, refer to page 981.
Note: The carbon steel output shaft is provided with a tap as a standard specification. Please refer to page 1017 for information of the size.

G3 Type Parallel Shaft | Shaft Diameter 22 | Foot Mounting

The values in parentheses ( ) are the indications for gearmotors with brake.
The values in brackets [ ] are the indications for carbon steel output shafts.

<Figure 1>

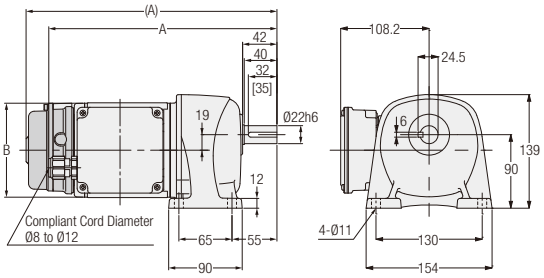

<Figure 2>

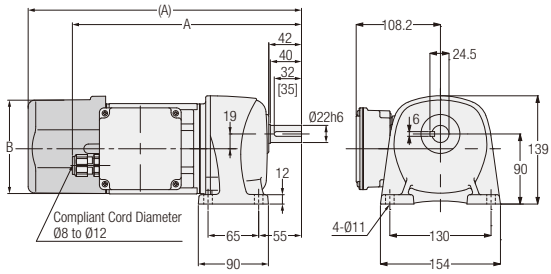

<Figure 3>

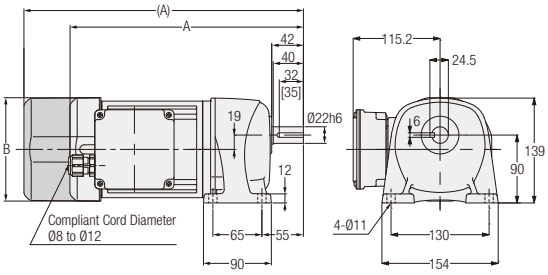

Number of Phases	Power	Output Shaft: Stainless Steel	Output Shaft: Carbon Steel	Reduction Ratio	Figure Number	Brake	Approx. Weight (kg)	A	B
3-Phase	0.1 kW	G3L22S∗∗∗-WM01T◇◇EN	G3L22N∗∗∗-WM01T◇◇EN	60, 80, 100, 120, 160, 200	1	No	7	279.5	Ø115
		G3L22S∗∗∗-WM01T◇◇EV◆	G3L22N∗∗∗-WM01T◇◇EV◆			Yes	8.5	307	Ø115
	0.2 kW	G3L22S∗∗∗-WM02T◇◇EN	G3L22N∗∗∗-WM02T◇◇EN	30, 40, 50, 60, 80, 100	2	No	7.5	294.5	Ø115
		G3L22S∗∗∗-WM02T◇◇EV◆	G3L22N∗∗∗-WM02T◇◇EV◆			Yes	9	351	□126
	0.4 kW	G3L22S∗∗∗-WM04T◇◇EN	G3L22N∗∗∗-WM04T◇◇EN	5, 10, 15, 20, 25	3	No	9.5	309.5	□137
		G3L22S∗∗∗-WM04T◇◇EV◆	G3L22N∗∗∗-WM04T◇◇EV◆			Yes	11	370.5	□137

Note: A reduction ratio will be indicated as ∗∗∗ in the nomenclature. In addition, a supply voltage/certification code will be indicated as ◇◇, and a brake specification will be indicated as ◆.
Note: Please refer to page 138 for the performance table.
Note: For the dimensions of the output shaft key, refer to page 981.
Note: The carbon steel output shaft is provided with a tap as a standard specification. Please refer to page 1017 for information of the size.

G3 Type Parallel Shaft | Shaft Diameter 28 | **Foot** Mounting

The values in parentheses ( ) are the indications for gearmotors with brake.
The values in brackets [ ] are the indications for carbon steel output shafts.

<Figure 1>

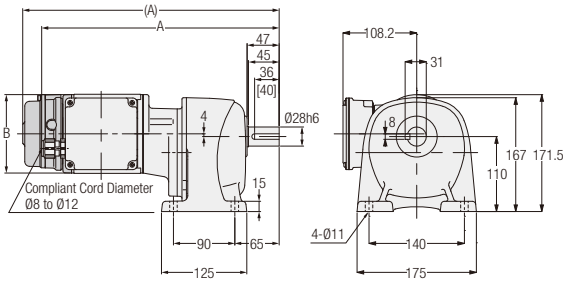

<Figure 2>

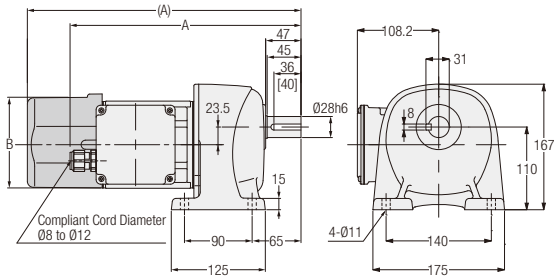

<Figure 3>

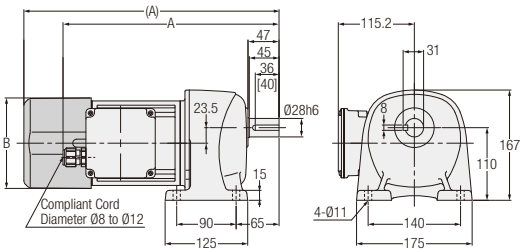

<Figure 4>

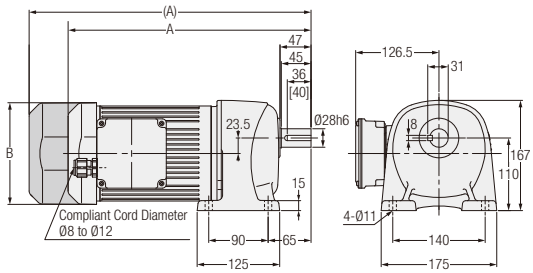

427	Power	Output Shaft: Stainless Steel	Output Shaft: Carbon Steel	Reduction Ratio	Figure Number	Brake	Approx. Weight (kg)	A	B
3-Phase	0.1 kW	G3L28S∗∗∗-WM01T◇◇EN	G3L28N∗∗∗-WM01T◇◇EN	300, 375, 450	1	No	10	348.5	Ø115
		G3L28S∗∗∗-WM01T◇◇EV◆	G3L28N∗∗∗-WM01T◇◇EV◆			Yes	11.5	376	Ø115
	0.2 kW	G3L28S∗∗∗-WM02T◇◇EN	G3L28N∗∗∗-WM02T◇◇EN	100, 120, 160, 200	2	No	9.5	307.5	Ø115
		G3L28S∗∗∗-WM02T◇◇EV◆	G3L28N∗∗∗-WM02T◇◇EV◆			Yes	11	364	□126
	0.4 kW	G3L28S∗∗∗-WM04T◇◇EN	G3L28N∗∗∗-WM04T◇◇EN	30, 40, 50, 60, 80, 100	3	No	11.5	325.5	□137
		G3L28S∗∗∗-WM04T◇◇EV◆	G3L28N∗∗∗-WM04T◇◇EV◆			Yes	13	386.5	□137
	0.75 kW	G3L28S∗∗∗-WR08T◇◇EN	G3L28N∗∗∗-WR08T◇◇EN	5, 10, 15, 20, 25	4	No	18.5	368	□154
		G3L28S∗∗∗-WR08T◇◇EV◆	G3L28N∗∗∗-WR08T◇◇EV◆			Yes	21	427	□154

Note: A reduction ratio will be indicated as ∗∗∗ in the nomenclature. In addition, a supply voltage/certification code will be indicated as ◇◇, and a brake specification will be indicated as ◆.
Note: Please refer to page 138 for the performance table.
Note: For the dimensions of the output shaft key, refer to page 981.
Note: The carbon steel output shaft is provided with a tap as a standard specification. Please refer to page 1017 for information of the size.

G3 Type Parallel Shaft | Shaft Diameter **32** | **Foot** Mounting

The values in parentheses ( ) are the indications for gearmotors with brake.
The values in brackets [ ] are the indications for carbon steel output shafts.

<Figure 1>

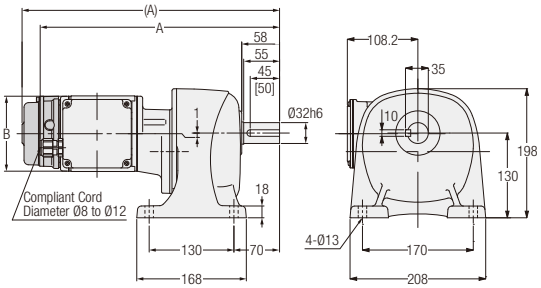

<Figure 2>

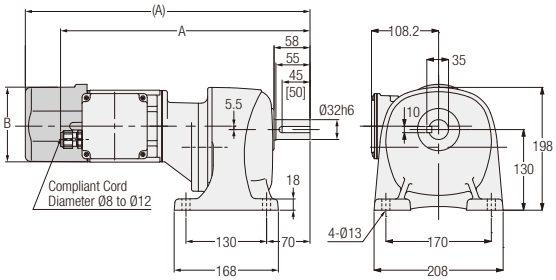

<Figure 3>

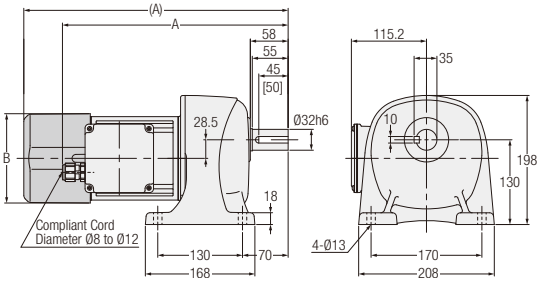

<Figure 4>

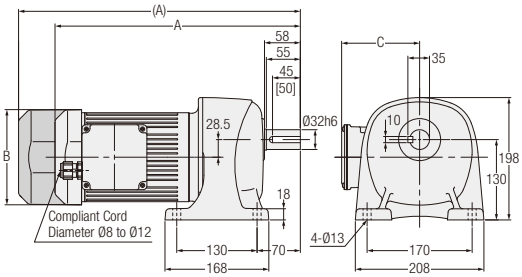

Number of Phases	Power	Output Shaft: Stainless Steel	Output Shaft: Carbon Steel	Reduction Ratio	Figure Number	Brake	Approx. Weight (kg)	A	B	C
3-Phase	0.1 kW	G3L32S∗∗∗-WM01T◇◇EN	G3L32N∗∗∗-WM01T◇◇EN	600, 750, 900, 1200	1	No	13	367.5	Ø115	-
		G3L32S∗∗∗-WM01T◇◇EV◆	G3L32N∗∗∗-WM01T◇◇EV◆			Yes	14.5	395	Ø115	-
	0.2 kW	G3L32S∗∗∗-WM02T◇◇EN	G3L32N∗∗∗-WM02T◇◇EN	300, 375, 450	2	No	13.5	402.5	Ø115	-
		G3L32S∗∗∗-WM02T◇◇EV◆	G3L32N∗∗∗-WM02T◇◇EV◆			Yes	15	459	□126	-
	0.4 kW	G3L32S∗∗∗-WM04T◇◇EN	G3L32N∗∗∗-WM04T◇◇EN	100, 120, 160, 200	3	No	14.5	344.5	□137	115.2
		G3L32S∗∗∗-WM04T◇◇EV◆	G3L32N∗∗∗-WM04T◇◇EV◆			Yes	16	405.5	□137	115.2
	0.75 kW	G3L32S∗∗∗-WR08T◇◇EN	G3L32N∗∗∗-WR08T◇◇EN	30, 40, 50, 60, 80, 100	4	No	22	397	□154	126.5
		G3L32S∗∗∗-WR08T◇◇EV◆	G3L32N∗∗∗-WR08T◇◇EV◆			Yes	24.5	456	□154	126.5
	1.5 kW	G3L32S∗∗∗-WR15T◇◇EN	G3L32N∗∗∗-WR15T◇◇EN	5, 10, 15, 20, 25	4	No	28	433	□178	137.5

Note: A reduction ratio will be indicated as ∗∗∗ in the nomenclature. In addition, a supply voltage/certification code will be indicated as ◇◇, and a brake specification will be indicated as ◆.
Note: There are no gearmotors with motor power of 1.5 kW that have a brake.
Note: Please refer to page 138 for the performance table.
Note: For the dimensions of the output shaft key, refer to page 981.
Note: The carbon steel output shaft is provided with a tap as a standard specification. Please refer to page 1017 for information of the size.

G3 Type Parallel Shaft | Shaft Diameter 40 | **Foot** Mounting

The values in parentheses ( ) are the indications for gearmotors with brake.
The values in brackets [ ] are the indications for carbon steel output shafts.

<Figure 1>

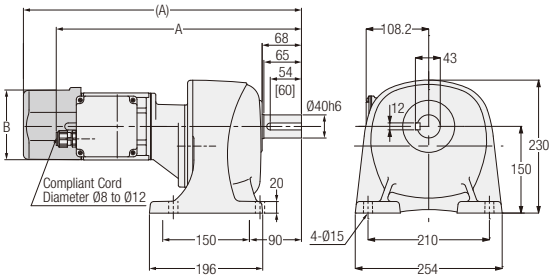

<Figure 2>

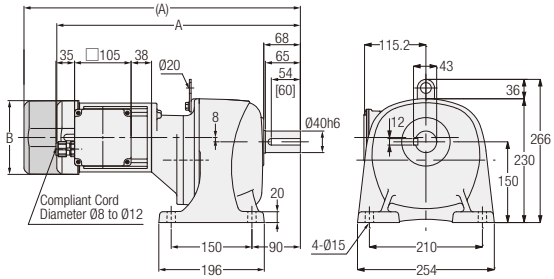

<Figure 3>

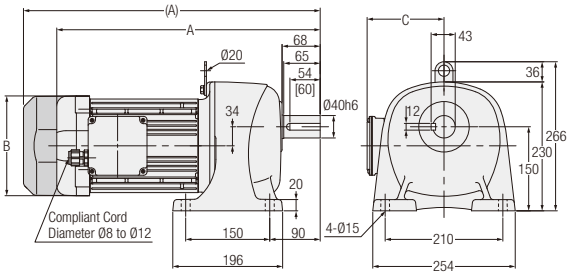

Note: Gearmotors with a motor power of 0.75 kW does not include the hanging plate.

Number of Phases	Power	Output Shaft: Stainless Steel	Output Shaft: Carbon Steel	Reduction Ratio	Figure Number	Brake	Approx. Weight (kg)	A	B	C
3-Phase	0.2 kW	G3L40S✱✱✱-WM02T◇◇EN	G3L40N✱✱✱-WM02T◇◇EN	600, 750, 900, 1200	1	No	20	424.5	Ø115	-
		G3L40S✱✱✱-WM02T◇◇EV◆	G3L40N✱✱✱-WM02T◇◇EV◆			Yes	21.5	481	□126	-
	0.4 kW	G3L40S✱✱✱-WM04T◇◇EN	G3L40N✱✱✱-WM04T◇◇EN	300, 375, 450	2	No	23	452.5	□137	-
		G3L40S✱✱✱-WM04T◇◇EV◆	G3L40N✱✱✱-WM04T◇◇EV◆			Yes	24.5	513.5	□137	-
	0.75 kW	G3L40S✱✱✱-WR08T◇◇EN	G3L40N✱✱✱-WR08T◇◇EN	100, 120, 160, 200	3	No	28.5	419	□154	126.5
		G3L40S✱✱✱-WR08T◇◇EV◆	G3L40N✱✱✱-WR08T◇◇EV◆			Yes	31	478	□154	126.5
	1.5 kW	G3L40S✱✱✱-WR15T◇◇EN	G3L40N✱✱✱-WR15T◇◇EN	30, 40, 50, 60, 80, 100	3	No	35	470	□178	137.5
	2.2 kW	G3L40S✱✱✱-WR22T◇◇EN	G3L40N✱✱✱-WR22T◇◇EN	5, 10, 15, 20, 25	3	No	41.5	503.5	□192	147.5

Note: A reduction ratio will be indicated as ✱✱✱ in the nomenclature. In addition, a supply voltage/certification code will be indicated as ◇◇, and a brake specification will be indicated as ◆.
Note: There are no gearmotors with motor power of 1.5 kW and 2.2 kW that have a brake.
Note: Please refer to page 138 for the performance table.
Note: For the dimensions of the output shaft key, refer to page 981.
Note: The carbon steel output shaft is provided with a tap as a standard specification. Please refer to page 1017 for information of the size.

G3 Type Parallel Shaft | Shaft Diameter **50** | **Foot** Mounting

The values in parentheses ( ) are the indications for gearmotors with brake.
The values in brackets [ ] are the indications for carbon steel output shafts.

<Figure 1>

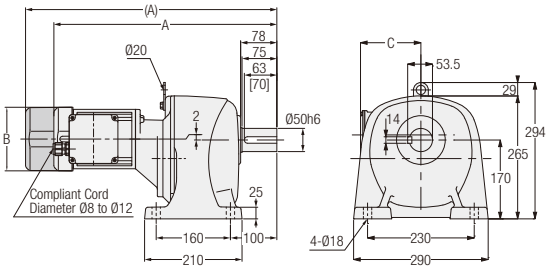

<Figure 2>

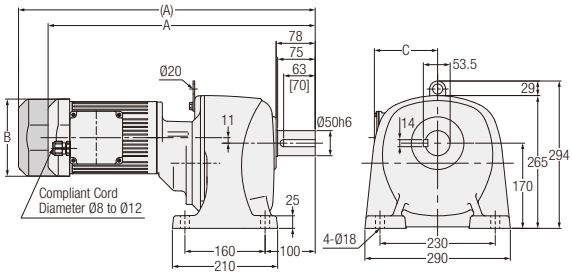

<Figure 3>

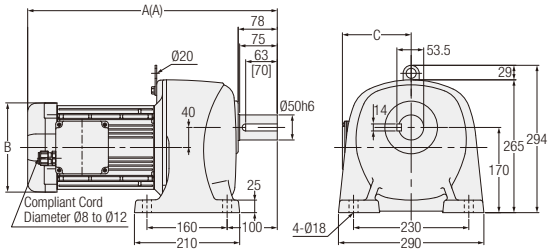

Number of Phases	Power	Output Shaft: Stainless Steel	Output Shaft: Carbon Steel	Reduction Ratio	Figure Number	Brake	Approx. Weight (kg)	A	B	C
3-Phase	0.4 kW	G3L50S∗∗∗-WM04T◇◇EN	G3L50N∗∗∗-WM04T◇◇EN	600, 750, 900, 1200	1	No	52.5	480.5	□137	115.2
		G3L50S∗∗∗-WM04T◇◇EV◆	G3L50N∗∗∗-WM04T◇◇EV◆			Yes	54	541.5	□137	115.2
	0.75 kW	G3L50S∗∗∗-WR08T◇◇EN	G3L50N∗∗∗-WR08T◇◇EN	300, 375, 450	2	No	60	533	□154	126.5
		G3L50S∗∗∗-WR08T◇◇EV◆	G3L50N∗∗∗-WR08T◇◇EV◆			Yes	62.5	592	□154	126.5
	1.5 kW	G3L50S∗∗∗-WR15T◇◇EN	G3L50N∗∗∗-WR15T◇◇EN	100, 120, 160, 200	3	No	64.5	498	□178	137.5
	2.2 kW	G3L50S∗∗∗-WR22T◇◇EN	G3L50N∗∗∗-WR22T◇◇EN	30, 40, 50, 60, 80, 100	3	No	71.5	547.5	□192	147.5

Note: A reduction ratio will be indicated as ∗∗∗ in the nomenclature. In addition, a supply voltage/certification code will be indicated as ◇◇, and a brake specification will be indicated as ◆.
Note: There are no gearmotors with motor power of 1.5 kW and 2.2 kW that have a brake.
Note: Please refer to page 139 for the performance table.
Note: For the dimensions of the output shaft key, refer to page 981.
Note: The carbon steel output shaft is provided with a tap as a standard specification. Please refer to page 1017 for information of the size.

GA Type Parallel Shaft | Shaft Diameter 50 | Foot Mounting

The values in parentheses ( ) are the indications for gearmotors with brake.
The values in brackets [ ] are the indications for carbon steel output shafts.

<Figure 1>

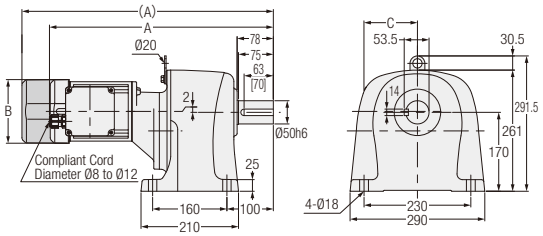

<Figure 2>

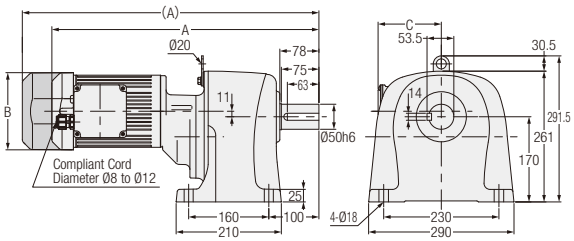

<Figure 3>

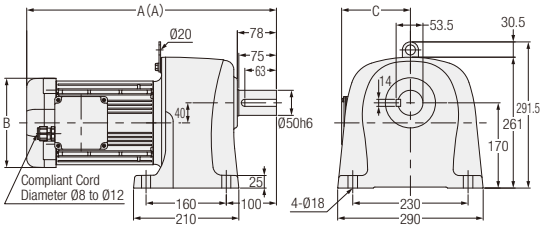

Number of Phases	Power	Output Shaft: Stainless Steel	Output Shaft: Carbon Steel	Reduction Ratio	Figure Number	Brake	Approx. Weight (kg)	A	B	C
3-Phase	0.4 kW	GAL50S∗∗∗-WM04T◇◇EN	GAL50N∗∗∗-WM04T◇◇EN	600, 750, 900, 1200	1	No	33	480.5	□137	115.2
		GAL50S∗∗∗-WM04T◇◇EV◆	GAL50N∗∗∗-WM04T◇◇EV◆			Yes	34.5	541.5	□137	115.2
	0.75 kW	GAL50S∗∗∗-WR08T◇◇EN	GAL50N∗∗∗-WR08T◇◇EN	300, 375, 450	2	No	40.5	533	□154	126.5
		GAL50S∗∗∗-WR08T◇◇EV◆	GAL50N∗∗∗-WR08T◇◇EV◆			Yes	43	592	□154	126.5
	1.5 kW	GAL50S∗∗∗-WR15T◇◇EN	GAL50N∗∗∗-WR15T◇◇EN	100, 120, 160, 200	3	No	45	498	□178	137.5
	2.2 kW	GAL50S∗∗∗-WR22T◇◇EN	GAL50N∗∗∗-WR22T◇◇EN	30, 40, 50, 60, 80, 100	3	No	52	547.5	□192	147.5

Note: A reduction ratio will be indicated as ∗∗∗ in the nomenclature. In addition, a supply voltage/certification code will be indicated as ◇◇, and a brake specification will be indicated as ◆.
Note: There are no gearmotors with motor power of 1.5 kW and 2.2 kW that have a brake.
Note: Please refer to page 141 for the performance table.
Note: For the dimensions of the output shaft key, refer to page 981.
Note: The carbon steel output shaft is provided with a tap as a standard specification. Please refer to page 1017 for information of the size.

G Type Parallel Shaft | Shaft Diameter 12 | Flange Mounting

The values in parentheses ( ) are the indications for gearmotors with brake.

<Figure 1>

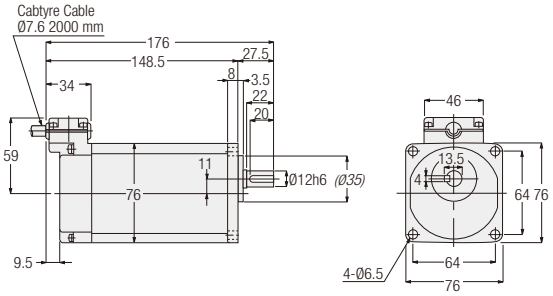

<Figure 2>

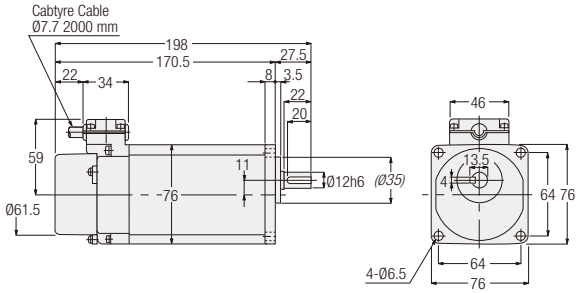

Note: The italic dimension indicates areas with remaining casting surface. Please add 0.5 mm or more to the italic dimension for the diameter of the mating hole.

Number of Phases	Power	Part Number	Reduction Ratio	Figure Number	Brake	Approx. Weight (kg)
3-Phase	15 W	GFW-12-∗∗∗-T15	5, 7.5, 10, 15, 20, 25, 30, 40, 50, 60, 80, 100, 120, 160, 200, 240	1	No	2
		GFV-12-∗∗∗-T15		2	Yes	
	25 W	GFW-12-∗∗∗-T25	5, 7.5, 10, 15, 20, 25, 30, 40, 50, 60, 80, 100, 120	1	No	2
		GFV-12-∗∗∗-T25		2	Yes	
	40 W	GFW-12-∗∗∗-T40	5, 7.5, 10, 15, 20, 25, 30, 40, 50, 60	1	No	2
		GFV-12-∗∗∗-T40		2	Yes	
1-Phase	15 W	GFW-12-∗∗∗-S15	5, 7.5, 10, 15, 20, 25, 30, 40, 50, 60, 80, 100, 120, 160, 200, 240	1	No	2
		GFV-12-∗∗∗-S15		2	Yes	
	25 W	GFW-12-∗∗∗-S25	5, 7.5, 10, 15, 20, 25, 30, 40, 50, 60, 80, 100, 120	1	No	2
		GFV-12-∗∗∗-S25		2	Yes	

Note: A reduction ratio will be indicated as ∗∗∗ in the nomenclature.
Note: Please refer to page 136 for the performance table.

G Type Parallel Shaft | Shaft Diameter 15 | Flange Mounting

<Figure 3>

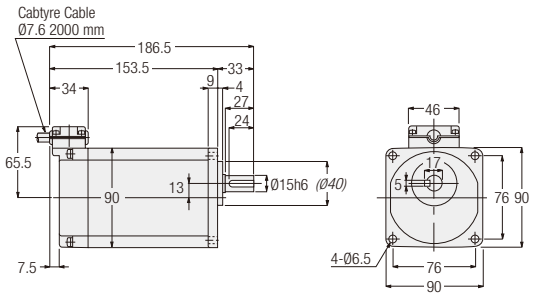

<Figure 4>

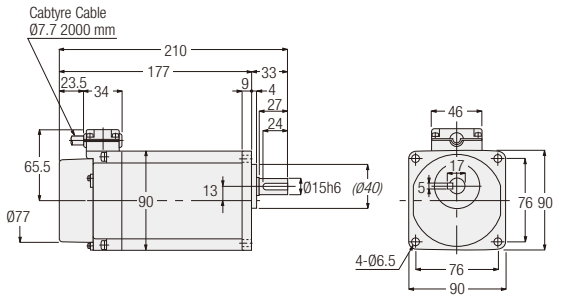

Note: The italic dimension indicates areas with remaining casting surface. Please add 0.5 mm or more to the italic dimension for the diameter of the mating hole.

Number of Phases	Power	Part Number	Reduction Ratio	Figure Number	Brake	Approx. Weight (kg)
3-Phase	25 W	GFW-15-∗∗∗-T25	160, 200, 240	3	No	3
		GFV-15-∗∗∗-T25		4	Yes	
	40 W	GFW-15-∗∗∗-T40	80, 100, 120	3	No	3
		GFV-15-∗∗∗-T40		4	Yes	
	60 W	GFW-15-∗∗∗-T60	5, 7.5, 10, 15, 20, 25, 30, 40, 50, 60	3	No	3
		GFV-15-∗∗∗-T60		4	Yes	
1-Phase	25 W	GFW-15-∗∗∗-S25	160, 200, 240	3	No	3
		GFV-15-∗∗∗-S25		4	Yes	
	40 W	GFW-15-∗∗∗-S40	5, 7.5, 10, 15, 20, 25, 30, 40, 50, 60, 80, 100, 120	3	No	3
		GFV-15-∗∗∗-S40		4	Yes	

Note: A reduction ratio will be indicated as ∗∗∗ in the nomenclature.
Note: Please refer to page 136 for the performance table.

G Type Parallel Shaft | Shaft Diameter 18 | Flange Mounting

The values in parentheses ( ) are the indications for gearmotors with brake.
The values in brackets [ ] are the indications for carbon steel output shafts.

<Figure 1>

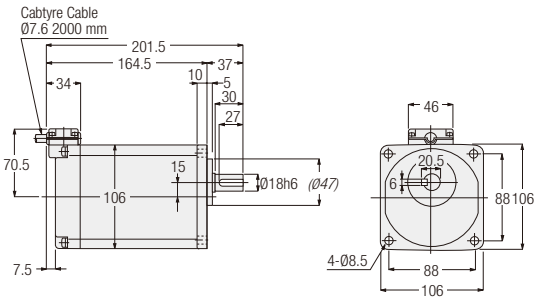

<Figure 2>

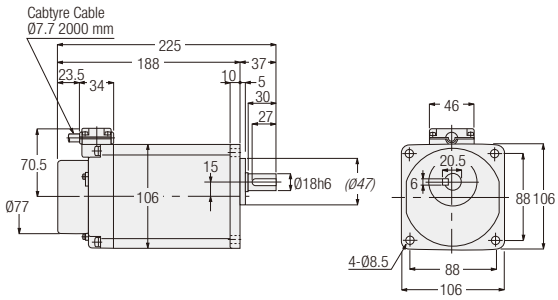

Note: The italic dimension indicates areas with remaining casting surface. Please add 0.5 mm or more to the italic dimension for the diameter of the mating hole.

Number of Phases	Power	Part Number	Reduction Ratio	Figure Number	Brake	Approx. Weight (kg)
3-Phase	40 W	GFW-18-∗∗∗-T40	160, 200, 240	1	No	4
		GFV-18-∗∗∗-T40		2	Yes	
	60 W	GFW-18-∗∗∗-T60	80, 100, 120, 160, 200, 240	1	No	4
		GFV-18-∗∗∗-T60		2	Yes	
	90 W	GFW-18-∗∗∗-T90	5, 7.5, 10, 15, 20, 25, 30, 40, 50, 60, 80, 100, 120, 160, 200, 240	1	No	4
		GFV-18-∗∗∗-T90		2	Yes	
1-Phase	40 W	GFW-18-∗∗∗-S40	160, 200, 240	1	No	4
		GFV-18-∗∗∗-S40		2	Yes	
	60 W	GFW-18-∗∗∗-S60	5, 7.5, 10, 15, 20, 25, 30, 40, 50, 60, 80, 100, 120, 160, 200, 240	1	No	4
		GFV-18-∗∗∗-S60		2	Yes	

Note: A reduction ratio will be indicated as ∗∗∗ in the nomenclature.
Note: Please refer to page 136 for the performance table.

G3 Type Parallel Shaft | Shaft Diameter 18 | Flange Mounting

<Figure 3>

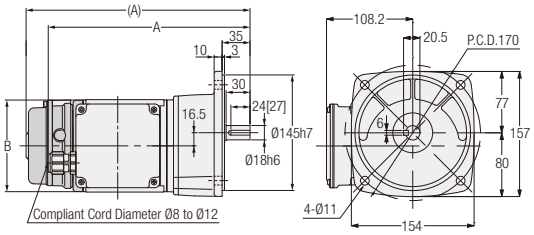

<Figure 4>

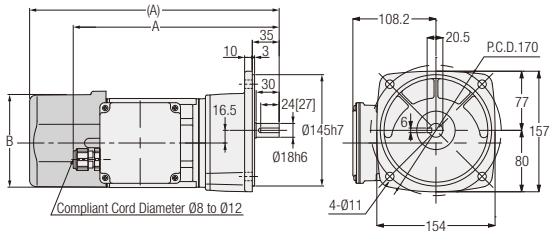

Number of Phases	Power	Output Shaft: Stainless Steel	Output Shaft: Carbon Steel	Reduction Ratio	Figure Number	Brake	Approx. Weight (kg)	A	B
3-Phase	0.1 kW	G3F18S∗∗∗-WM01T◇◇EN	G3F18N∗∗∗-WM01T◇◇EN	5, 10, 15, 20, 25, 30, 40, 50	3	No	6.5	253.5	Ø115
		G3F18S∗∗∗-WM01T◇◇EV◆	G3F18N∗∗∗-WM01T◇◇EV◆			Yes	8	281	Ø115
	0.2 kW	G3F18S∗∗∗-WM02T◇◇EN	G3F18N∗∗∗-WM02T◇◇EN	5, 10, 15, 20, 25	4	No	7	268.5	Ø115
		G3F18S∗∗∗-WM02T◇◇EV◆	G3F18N∗∗∗-WM02T◇◇EV◆			Yes	8.5	325	□126

Note: A reduction ratio will be indicated as ∗∗∗ in the nomenclature. In addition, a supply voltage/certification code will be indicated as ◇◇, and a brake specification will be indicated as ◆.
Note: Please refer to page 138 for the performance table.
Note: For the dimensions of the output shaft key, refer to page 981.
Note: The carbon steel output shaft is provided with a tap as a standard specification. Please refer to page 1017 for information of the size.

G3 Type Parallel Shaft | Shaft Diameter 22 | **Flange** Mounting

The values in parentheses ( ) are the indications for gearmotors with brake.
The values in brackets [ ] are the indications for carbon steel output shafts.

<Figure 1>

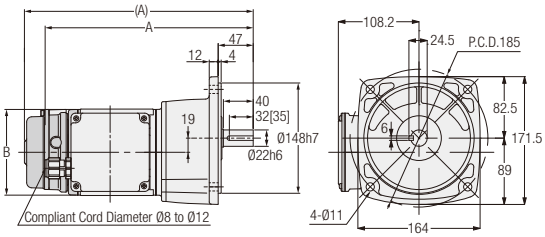

<Figure 2>

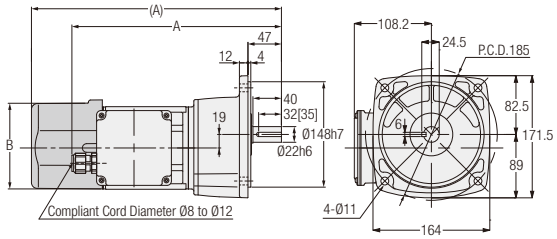

<Figure 3>

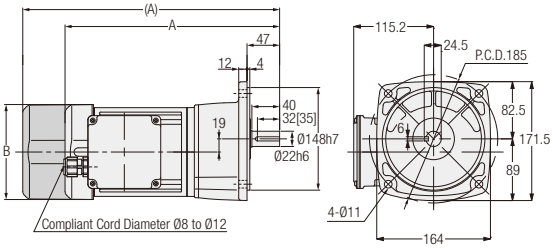

Number of Phases	Power	Output Shaft: Stainless Steel	Output Shaft: Carbon Steel	Reduction Ratio	Figure Number	Brake	Approx. Weight (kg)	A	B
3-Phase	0.1 kW	G3F22S∗∗∗-WM01T◇◇EN	G3F22N∗∗∗-WM01T◇◇EN	60, 80, 100, 120, 160, 200	1	No	7.5	279.5	Ø115
		G3F22S∗∗∗-WM01T◇◇EV◆	G3F22N∗∗∗-WM01T◇◇EV◆			Yes	9	307	Ø115
	0.2 kW	G3F22S∗∗∗-WM02T◇◇EN	G3F22N∗∗∗-WM02T◇◇EN	30, 40, 50, 60, 80, 100	2	No	8	294.5	Ø115
		G3F22S∗∗∗-WM02T◇◇EV◆	G3F22N∗∗∗-WM02T◇◇EV◆			Yes	9.5	351	□126
	0.4 kW	G3F22S∗∗∗-WM04T◇◇EN	G3F22N∗∗∗-WM04T◇◇EN	5, 10, 15, 20, 25	3	No	10	309.5	□137
		G3F22S∗∗∗-WM04T◇◇EV◆	G3F22N∗∗∗-WM04T◇◇EV◆			Yes	11.5	370.5	□137

Note: A reduction ratio will be indicated as ∗∗∗ in the nomenclature. In addition, a supply voltage/certification code will be indicated as ◇◇, and a brake specification will be indicated as ◆.
Note: Please refer to page 138 for the performance table.
Note: For the dimensions of the output shaft key, refer to page 981.
Note: The carbon steel output shaft is provided with a tap as a standard specification. Please refer to page 1017 for information of the size.

G3 Type Parallel Shaft | Shaft Diameter **28** | **Flange** Mounting

The values in parentheses ( ) are the indications for gearmotors with brake.
The values in brackets [ ] are the indications for carbon steel output shafts.

<Figure 1>

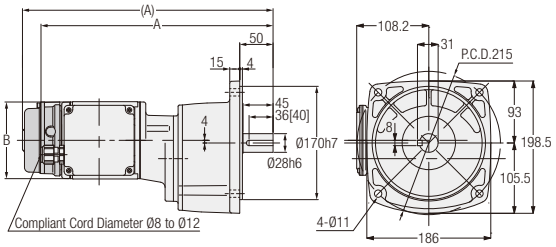

<Figure 2>

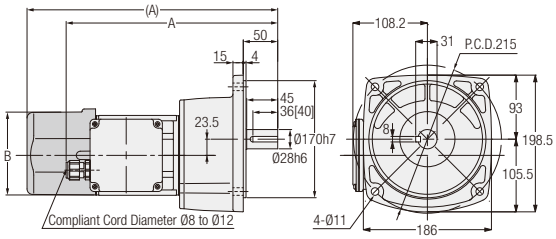

<Figure 3>

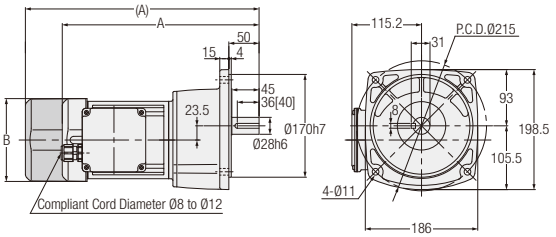

<Figure 4>

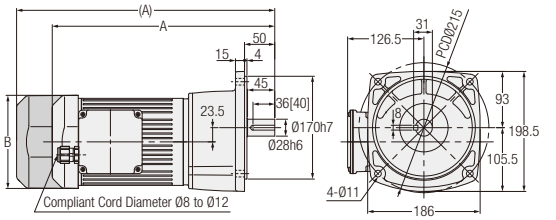

Number of Phases	Power	Output Shaft: Stainless Steel	Output Shaft: Carbon Steel	Reduction Ratio	Figure Number	Brake	Approx. Weight (kg)	A	B
3-Phase	0.1 kW	G3F28S∗∗∗-WM01T◇◇EN	G3F28N∗∗∗-WM01T◇◇EN	300, 375, 450	1	No	10.5	348.5	Ø115
		G3F28S∗∗∗-WM01T◇◇EV◆	G3F28N∗∗∗-WM01T◇◇EV◆			Yes	12	376	Ø115
	0.2 kW	G3F28S∗∗∗-WM02T◇◇EN	G3F28N∗∗∗-WM02T◇◇EN	100, 120, 160, 200	2	No	10	307.5	Ø115
		G3F28S∗∗∗-WM02T◇◇EV◆	G3F28N∗∗∗-WM02T◇◇EV◆			Yes	11.5	364	□126
	0.4 kW	G3F28S∗∗∗-WM04T◇◇EN	G3F28N∗∗∗-WM04T◇◇EN	30, 40, 50, 60, 80, 100	3	No	12	325.5	□137
		G3F28S∗∗∗-WM04T◇◇EV◆	G3F28N∗∗∗-WM04T◇◇EV◆			Yes	13.5	386.5	□137
	0.75 kW	G3F28S∗∗∗-WR08T◇◇EN	G3F28N∗∗∗-WR08T◇◇EN	5, 10, 15, 20, 25	4	No	19	368	□154
		G3F28S∗∗∗-WR08T◇◇EV◆	G3F28N∗∗∗-WR08T◇◇EV◆			Yes	21.5	427	□154

Note: A reduction ratio will be indicated as ∗∗∗ in the nomenclature. In addition, a supply voltage/certification code will be indicated as ◇◇, and a brake specification will be indicated as ◆.
Note: Please refer to page 138 for the performance table.
Note: For the dimensions of the output shaft key, refer to page 981.
Note: The carbon steel output shaft is provided with a tap as a standard specification. Please refer to page 1017 for information of the size.

G3 Type Parallel Shaft | Shaft Diameter 32 | Flange Mounting

The values in parentheses ( ) are the indications for gearmotors with brake.
The values in brackets [ ] are the indications for carbon steel output shafts.

<Figure 1>

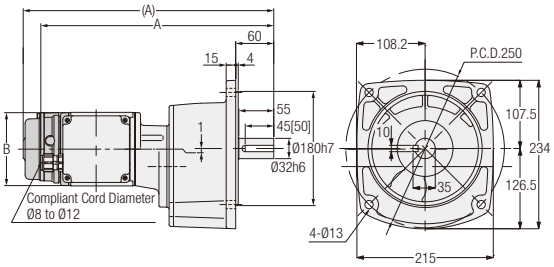

<Figure 2>

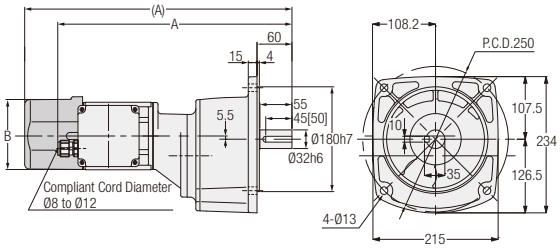

<Figure 3>

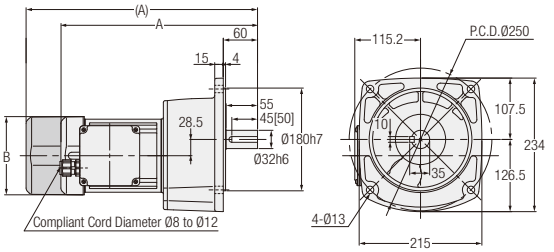

<Figure 4>

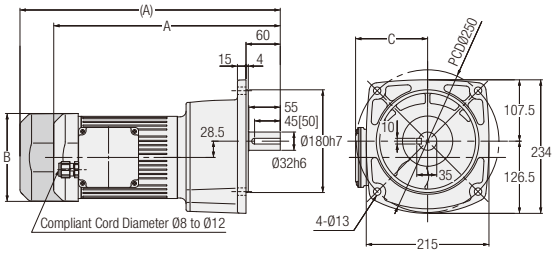

Number of Phases	Power	Output Shaft: Stainless Steel	Output Shaft: Carbon Steel	Reduction Ratio	Figure Number	Brake	Approx. Weight (kg)	A	B	C
3-Phase	0.1 kW	G3F32S***-WM01T◇◇EN	G3F32N***-WM01T◇◇EN	600, 750, 900, 1200	1	No	13.5	367.5	Ø115	-
		G3F32S***-WM01T◇◇EV◆	G3F32N***-WM01T◇◇EV◆			Yes	15	395	Ø115	-
	0.2 kW	G3F32S***-WM02T◇◇EN	G3F32N***-WM02T◇◇EN	300, 375, 450	2	No	14	402.5	Ø115	-
		G3F32S***-WM02T◇◇EV◆	G3F32N***-WM02T◇◇EV◆			Yes	15.5	459	□126	-
	0.4 kW	G3F32S***-WM04T◇◇EN	G3F32N***-WM04T◇◇EN	100, 120, 160, 200	3	No	15	344.5	□137	-
		G3F32S***-WM04T◇◇EV◆	G3F32N***-WM04T◇◇EV◆			Yes	16.5	405.5	□137	-
	0.75 kW	G3F32S***-WR08T◇◇EN	G3F32N***-WR08T◇◇EN	30, 40, 50, 60, 80, 100	4	No	22.5	397	□154	126.5
		G3F32S***-WR08T◇◇EV◆	G3F32N***-WR08T◇◇EV◆			Yes	25	456	□154	126.5
	1.5 kW	G3F32S***-WR15T◇◇EN	G3F32N***-WR15T◇◇EN	5, 10, 15, 20, 25	4	No	28.5	433	□178	137.5

Note: A reduction ratio will be indicated as *** in the nomenclature. In addition, a supply voltage/certification code will be indicated as ◇◇, and a brake specification will be indicated as ◆.
Note: There are no gearmotors with motor power of 1.5 kW that have a brake.
Note: Please refer to page 138 for the performance table.
Note: For the dimensions of the output shaft key, refer to page 981.
Note: The carbon steel output shaft is provided with a tap as a standard specification. Please refer to page 1017 for information of the size.

G3 Type Parallel Shaft | Shaft Diameter **40** | **Flange** Mounting

The values in parentheses ( ) are the indications for gearmotors with brake.
The values in brackets [ ] are the indications for carbon steel output shafts.

<Figure 1>

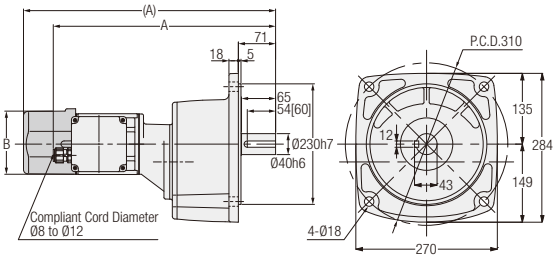

<Figure 2>

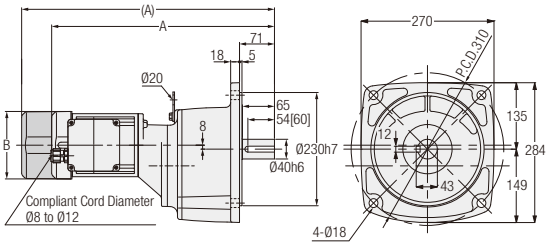

<Figure 3>

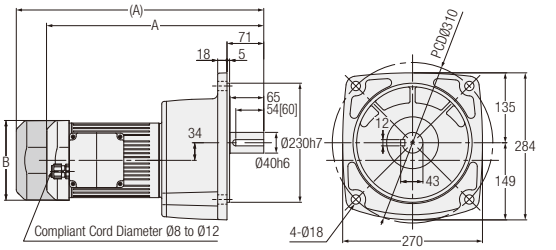

<Figure 4>

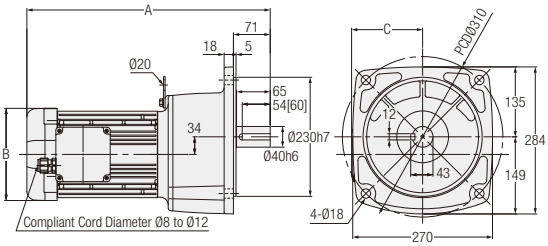

Number of Phases	Power	Output Shaft: Stainless Steel	Output Shaft: Carbon Steel	Reduction Ratio	Figure Number	Brake	Approx. Weight (kg)	A	B	C
3-Phase	0.2 kW	G3F40S∗∗∗-WM02T◇◇EN	G3F40N∗∗∗-WM02T◇◇EN	600, 750, 900, 1200	1	No	21.5	424.5	Ø115	-
		G3F40S∗∗∗-WM02T◇◇EV◆	G3F40N∗∗∗-WM02T◇◇EV◆			Yes	23	481	□126	-
	0.4 kW	G3F40S∗∗∗-WM04T◇◇EN	G3F40N∗∗∗-WM04T◇◇EN	300, 375, 450	2	No	24.5	452.5	□137	-
		G3F40S∗∗∗-WM04T◇◇EV◆	G3F40N∗∗∗-WM04T◇◇EV◆			Yes	26	513.5	□137	-
	0.75 kW	G3F40S∗∗∗-WR08T◇◇EN	G3F40N∗∗∗-WR08T◇◇EN	100, 120, 160, 200	3	No	30	419	□154	-
		G3F40S∗∗∗-WR08T◇◇EV◆	G3F40N∗∗∗-WR08T◇◇EV◆			Yes	32.5	478	□154	-
	1.5 kW	G3F40S∗∗∗-WR15T◇◇EN	G3F40N∗∗∗-WR15T◇◇EN	30, 40, 50, 60, 80, 100	4	No	36.5	470	□178	137.5
	2.2 kW	G3F40S∗∗∗-WR22T◇◇EN	G3F40N∗∗∗-WR22T◇◇EN	5, 10, 15, 20, 25	4	No	43	503.5	□192	147.5

Note: A reduction ratio will be indicated as ∗∗∗ in the nomenclature. In addition, a supply voltage/certification code will be indicated as ◇◇, and a brake specification will be indicated as ◆.
Note: There are no gearmotors with motor power of 1.5 kW and 2.2 kW that have a brake.
Note: Please refer to page 138 for the performance table.
Note: For the dimensions of the output shaft key, refer to page 981.
Note: The carbon steel output shaft is provided with a tap as a standard specification. Please refer to page 1017 for information of the size.

G3 Type Parallel Shaft | Shaft Diameter **50** | **Flange** Mounting

The values in parentheses ( ) are the indications for gearmotors with brake.
The values in brackets [ ] are the indications for carbon steel output shafts.

<Figure 1>

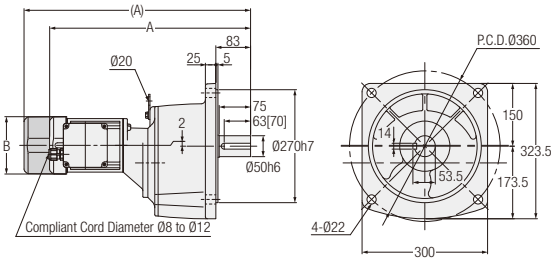

<Figure 2>

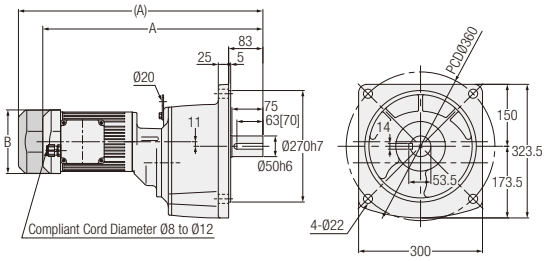

<Figure 3>

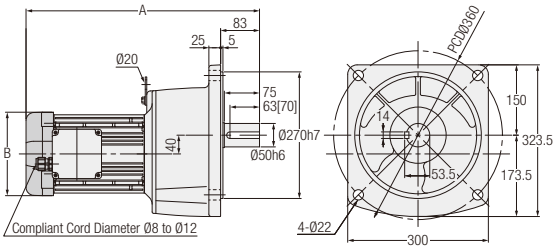

Number of Phases	Power	Output Shaft: Stainless Steel	Output Shaft: Carbon Steel	Reduction Ratio	Figure Number	Brake	Approx. Weight (kg)	A	B
3-Phase	0.4 kW	G3F50S✱✱✱-WM04T◇◇EN	G3F50N✱✱✱-WM04T◇◇EN	600, 750, 900, 1200	1	No	57.5	480.5	□137
		G3F50S✱✱✱-WM04T◇◇EV◆	G3F50N✱✱✱-WM04T◇◇EV◆			Yes	59	541.5	□137
	0.75 kW	G3F50S✱✱✱-WR08T◇◇EN	G3F50N✱✱✱-WR08T◇◇EN	300, 375, 450	2	No	65	533	□154
		G3F50S✱✱✱-WR08T◇◇EV◆	G3F50N✱✱✱-WR08T◇◇EV◆			Yes	67.5	592	□154
	1.5 kW	G3F50S✱✱✱-WR15T◇◇EN	G3F50N✱✱✱-WR15T◇◇EN	100, 120, 160, 200	3	No	69.5	498	□178
	2.2 kW	G3F50S✱✱✱-WR22T◇◇EN	G3F50N✱✱✱-WR22T◇◇EN	30, 40, 50, 60, 80, 100	3	No	76.5	547.5	□192

Note: A reduction ratio will be indicated as ✱✱✱ in the nomenclature. In addition, a supply voltage/certification code will be indicated as ◇◇, and a brake specification will be indicated as ◆.
Note: There are no gearmotors with motor power of 1.5 kW and 2.2 kW that have a brake.
Note: Please refer to page 139 for the performance table.
Note: For the dimensions of the output shaft key, refer to page 981.
Note: The carbon steel output shaft is provided with a tap as a standard specification. Please refer to page 1017 for information of the size.

G3 Type Parallel Shaft | Shaft Diameter **18** | **Small Flange** Mounting

The values in parentheses ( ) are the indications for gearmotors with brake.
The values in brackets [ ] are the indications for carbon steel output shafts.

<Figure 1>

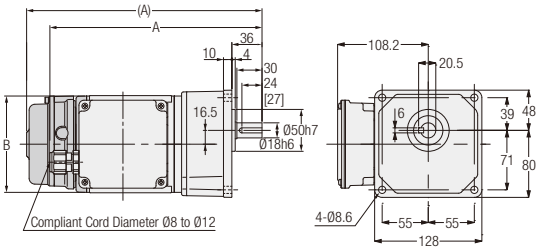

<Figure 2>

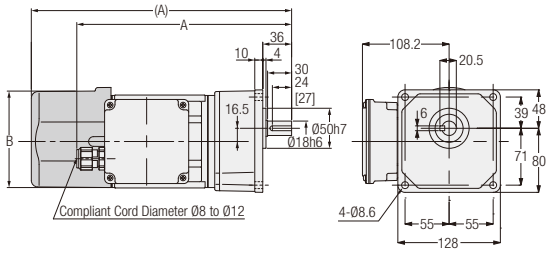

Number of Phases	Power	Output Shaft: Stainless Steel	Output Shaft: Carbon Steel	Reduction Ratio	Figure Number	Brake	Approx. Weight (kg)	A	B
3-Phase	0.1 kW	G3K18S∗∗∗-WM01T◇◇EN	G3K18N∗∗∗-WM01T◇◇EN	5, 10, 15, 20, 25, 30, 40, 50	1	No	6.5	253.5	Ø115
		G3K18S∗∗∗-WM01T◇◇EV◆	G3K18N∗∗∗-WM01T◇◇EV◆			Yes	8	281	Ø115
	0.2 kW	G3K18S∗∗∗-WM02T◇◇EN	G3K18N∗∗∗-WM02T◇◇EN	5, 10, 15, 20, 25	2	No	7	268.5	Ø115
		G3K18S∗∗∗-WM02T◇◇EV◆	G3K18N∗∗∗-WM02T◇◇EV◆			Yes	8.5	325	□126

Note: A reduction ratio will be indicated as ∗∗∗ in the nomenclature. In addition, a supply voltage/certification code will be indicated as ◇◇, and a brake specification will be indicated as ◆.
Note: Please refer to page 138 for the performance table.
Note: For the dimensions of the output shaft key, refer to page 981.
Note: The carbon steel output shaft is provided with a tap as a standard specification. Please refer to page 1017 for information of the size.

G3 Type Parallel Shaft | Shaft Diameter **22** | **Small Flange** Mounting

The values in parentheses ( ) are the indications for gearmotors with brake.
The values in brackets [ ] are the indications for carbon steel output shafts.

<Figure 1>

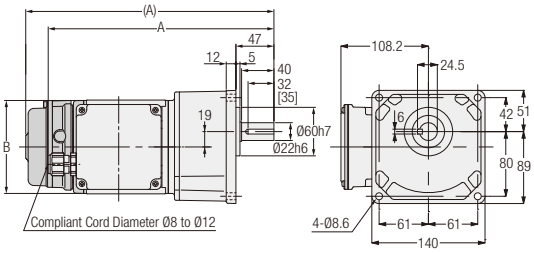

<Figure 2>

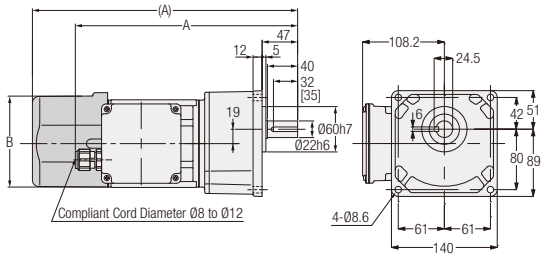

<Figure 3>

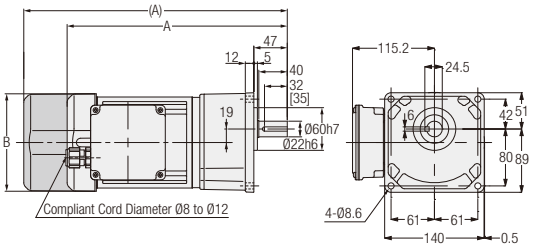

Number of Phases	Power	Output Shaft: Stainless Steel	Output Shaft: Carbon Steel	Reduction Ratio	Figure Number	Brake	Approx. Weight (kg)	A	B
3-Phase	0.1 kW	G3K22S∗∗∗-WM01T◇◇EN	G3K22N∗∗∗-WM01T◇◇EN	60, 80, 100, 120, 160, 200	1	No	7.5	279.5	Ø115
		G3K22S∗∗∗-WM01T◇◇EV◆	G3K22N∗∗∗-WM01T◇◇EV◆			Yes	9	307	Ø115
	0.2 kW	G3K22S∗∗∗-WM02T◇◇EN	G3K22N∗∗∗-WM02T◇◇EN	30, 40, 50, 60, 80, 100	2	No	8	294.5	Ø115
		G3K22S∗∗∗-WM02T◇◇EV◆	G3K22N∗∗∗-WM02T◇◇EV◆			Yes	9.5	351	□126
	0.4 kW	G3K22S∗∗∗-WM04T◇◇EN	G3K22N∗∗∗-WM04T◇◇EN	5, 10, 15, 20, 25	3	No	10	309.5	□137
		G3K22S∗∗∗-WM04T◇◇EV◆	G3K22N∗∗∗-WM04T◇◇EV◆			Yes	11.5	370.5	□137

Note: A reduction ratio will be indicated as ∗∗∗ in the nomenclature. In addition, a supply voltage/certification code will be indicated as ◇◇, and a brake specification will be indicated as ◆.
Note: Please refer to page 138 for the performance table.
Note: For the dimensions of the output shaft key, refer to page 981.
Note: The carbon steel output shaft is provided with a tap as a standard specification. Please refer to page 1017 for information of the size.

G3 Type Parallel Shaft | Shaft Diameter **28** | **Small Flange** Mounting

The values in parentheses ( ) are the indications for gearmotors with brake.
The values in brackets [ ] are the indications for carbon steel output shafts.

<Figure 1>

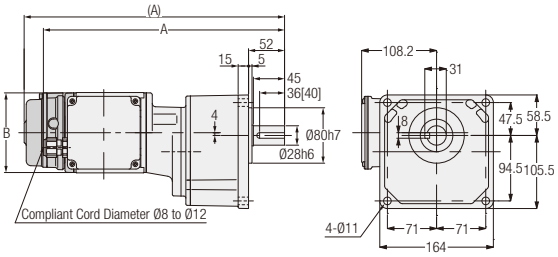

<Figure 2>

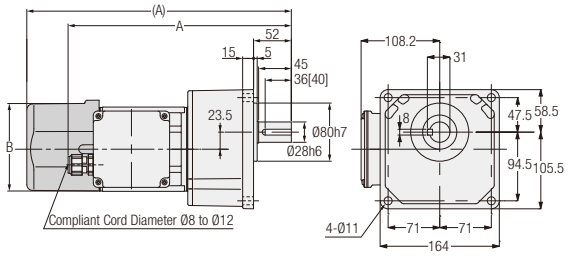

<Figure 3>

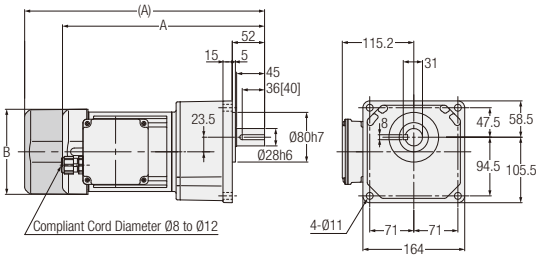

<Figure 4>

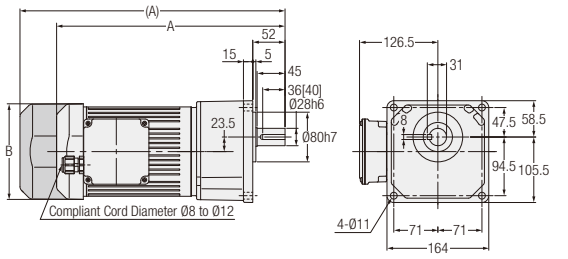

Number of Phases	Power	Output Shaft: Stainless Steel	Output Shaft: Carbon Steel	Reduction Ratio	Figure Number	Brake	Approx. Weight (kg)	A	B
3-Phase	0.1 kW	G3K28S✱✱✱-WM01T◇◇EN	G3K28N✱✱✱-WM01T◇◇EN	300, 375, 450	1	No	10.5	348.5	Ø115
		G3K28S✱✱✱-WM01T◇◇EV◆	G3K28N✱✱✱-WM01T◇◇EV◆			Yes	12	376	Ø115
	0.2 kW	G3K28S✱✱✱-WM02T◇◇EN	G3K28N✱✱✱-WM02T◇◇EN	100, 120, 160, 200	2	No	10	307.5	Ø115
		G3K28S✱✱✱-WM02T◇◇EV◆	G3K28N✱✱✱-WM02T◇◇EV◆			Yes	11.5	364	□126
	0.4 kW	G3K28S✱✱✱-WM04T◇◇EN	G3K28N✱✱✱-WM04T◇◇EN	30, 40, 50, 60, 80, 100	3	No	12	325.5	□137
		G3K28S✱✱✱-WM04T◇◇EV◆	G3K28N✱✱✱-WM04T◇◇EV◆			Yes	13.5	386.5	□137
	0.75 kW	G3K28S✱✱✱-WR08T◇◇EN	G3K28N✱✱✱-WR08T◇◇EN	5, 10, 15, 20, 25	4	No	19	368	□154
		G3K28S✱✱✱-WR08T◇◇EV◆	G3K28N✱✱✱-WR08T◇◇EV◆			Yes	21.5	427	□154

Note: A reduction ratio will be indicated as ✱✱✱ in the nomenclature. In addition, a supply voltage/certification code will be indicated as ◇◇, and a brake specification will be indicated as ◆.
Note: Please refer to page 138 for the performance table.
Note: For the dimensions of the output shaft key, refer to page 981.
Note: The carbon steel output shaft is provided with a tap as a standard specification. Please refer to page 1017 for information of the size.

G3 Type Parallel Shaft | Shaft Diameter **32** | **Small Flange** Mounting

The values in parentheses ( ) are the indications for gearmotors with brake.
The values in brackets [ ] are the indications for carbon steel output shafts.

<Figure 1>

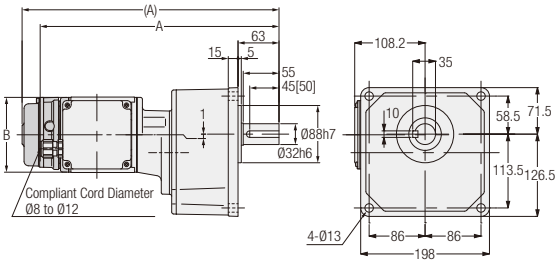

<Figure 2>

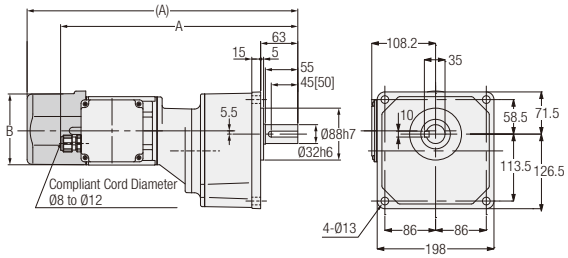

<Figure 3>

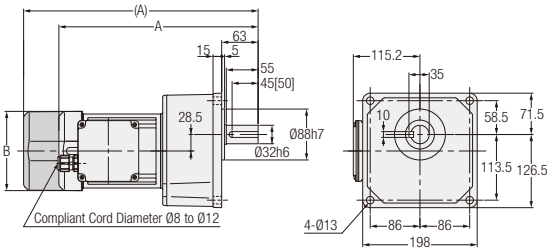

<Figure 4>

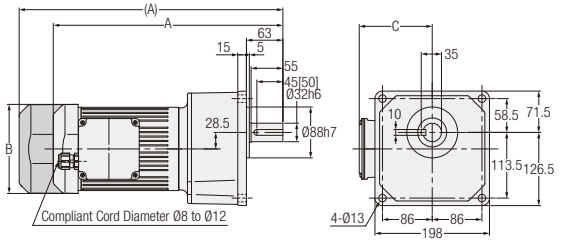

Number of Phases	Power	Output Shaft: Stainless Steel	Output Shaft: Carbon Steel	Reduction Ratio	Figure Number	Brake	Approx. Weight (kg)	A	B	C
3-Phase	0.1 kW	G3K32S∗∗∗-WM01T◇◇EN	G3K32N∗∗∗-WM01T◇◇EN	600, 750, 900, 1200	1	No	13.5	367.5	Ø115	-
		G3K32S∗∗∗-WM01T◇◇EV◆	G3K32N∗∗∗-WM01T◇◇EV◆			Yes	15	395	Ø115	-
	0.2 kW	G3K32S∗∗∗-WM02T◇◇EN	G3K32N∗∗∗-WM02T◇◇EN	300, 375, 450	2	No	14	402.5	Ø115	-
		G3K32S∗∗∗-WM02T◇◇EV◆	G3K32N∗∗∗-WM02T◇◇EV◆			Yes	15.5	459	□126	-
	0.4 kW	G3K32S∗∗∗-WM04T◇◇EN	G3K32N∗∗∗-WM04T◇◇EN	100, 120, 160, 200	3	No	15	344.5	□137	-
		G3K32S∗∗∗-WM04T◇◇EV◆	G3K32N∗∗∗-WM04T◇◇EV◆			Yes	16.5	405.5	□137	-
	0.75 kW	G3K32S∗∗∗-WR08T◇◇EN	G3K32N∗∗∗-WR08T◇◇EN	30, 40, 50, 60, 80, 100	4	No	22.5	397	□154	126.5
		G3K32S∗∗∗-WR08T◇◇EV◆	G3K32N∗∗∗-WR08T◇◇EV◆			Yes	25	456	□154	126.5
	1.5 kW	G3K32S∗∗∗-WR15T◇◇EN	G3K32N∗∗∗-WR15T◇◇EN	5, 10, 15, 20, 25	4	No	28.5	433	□178	137.5

Note: A reduction ratio will be indicated as ∗∗∗ in the nomenclature. In addition, a supply voltage/certification code will be indicated as ◇◇, and a brake specification will be indicated as ◆.
Note: There are no gearmotors with motor power of 1.5 kW that have a brake.
Note: Please refer to page 138 for the performance table.
Note: For the dimensions of the output shaft key, refer to page 981.
Note: The carbon steel output shaft is provided with a tap as a standard specification. Please refer to page 1017 for information of the size.

MEMO

3. Gearmotors with Clutch/Brake

3-1. Motor Characteristics Table

G3 Type 3-Phase Standard Voltage

Series	Power	Voltage (V)	Frequency (Hz)	Rated Current (A)	Rated Speed (r/min)
MID	0.1 kW	200/200/220	50/60/60	0.61/0.54/0.54	1410/1690/1710
	0.2 kW IE2	200/200/220	50/60/60	1.1/1.0/1.0	1400/1680/1700
	0.4 kW IE2	200/200/220	50/60/60	2.1/1.8/1.8	1400/1680/1700
	0.75 kW IE3	200/200/220	50/60/60	3.5/3.2/3.1	1450/1740/1750

G3 Type 3-Phase High Voltage (400 V Class)

Series	Power	Voltage (V)	Frequency (Hz)	Rated Current (A)	Rated Speed (r/min)
MID	0.1 kW	380/400/400/440	50/50/60/60	0.31/0.31/0.28/0.28	1400/1410/1690/1720
	0.2 kW IE2	380/400/400/440	50/50/60/60	0.56/0.56/0.5/0.5	1390/1400/1680/1710
	0.4 kW IE2	380/400/400/440	50/50/60/60	1.0/1.0/0.9/0.9	1390/1400/1680/1710
	0.75 kW IE3	380/400/400/440	50/50/60/60	1.73/1.72/1.58/1.54	1440/1450/1740/1750

3-2. Performance Table

[Notes]
- The output shaft speed is the value relative to the synchronous speed of the motor and the reduction ratio.
- ▭ in the performance table indicates that the shaft rotates clockwise when viewed from the output shaft side when the connection is made as shown on page 557 (CW). (Refer to the figure on the right)
- Allowable output shaft O.H.L. is the value at the middle of the output shaft.
- The "*" mark indicates a limited torque type. Please make sure to check the allowable output shaft torque in the performance table.
- Please avoid using gearmotors with clutch/brake in vertical operation (lifting). There is a danger of falling during a power outage.

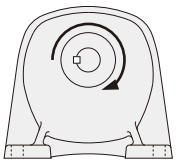

Motor Power	Frame Size	Reduction Ratio	Actual Reduction Ratio	Output Shaft Speed r/min 50 Hz	Output Shaft Speed r/min 60 Hz	Allowable Output Shaft Torque N·m 50 Hz	Allowable Output Shaft Torque N·m 60 Hz	Allowable Output Shaft O.H.L. N	Drawings Foot Mount	Drawings Flange Mount	Drawings Small Flange Mount
3-Phase 0.1 kW	18	1/5	33/164	300	360	3	2.5	770	P.165	P.167	P.170
		1/10	77/779	150	180	6.1	5	1140			
		1/15	119/1804	100	120	9.1	7.5	1270			
		1/20	49/984	75	90	12	9.8	1530			
		1/25	28/697	60	72	15	12.7	1650			
		1/30	35/1066	50	60	19	14.7	1780			
		1/40	35/1404	37.5	45	24	19.6	1910			
		1/50	7/351	30	36	29	24.5	2040			
	22	1/60	11/684	25	30	35	29.4	2800	P.165	P.168	P.170
		1/80	21/1634	18.8	22.5	47	39.2	3180			
		1/100	7/684	15	18	59	49	3180			
		1/120	147/17974	12.5	15	71	58.8	3180			
		1/160	21/3268	9.4	11.2	94	78.4	3180			
		1/200	21/4085	7.5	9	117	98	3180			
3-Phase 0.2 kW	18	1/5	33/164	300	360	6.1	5	770	P.165	P.167	P.170
		1/10	77/779	150	180	11.8	9.8	1140			
		1/15	119/1804	100	120	18.6	14.7	1270			
		1/20	49/984	75	90	24.5	20.6	1450			
		1/25	28/697	60	72	30.4	25.5	1550			
	22	1/30	7/216	50	60	36.3	30.4	2280	P.165	P.168	P.170
		1/40	91/3600	37.5	45	47	39.2	2410			
		1/50	11/540	30	36	58.8	49	2540			
		1/60	637/39600	25	30	70.6	58.8	2800			
		1/80	91/7200	18.8	22.5	94.1	78.4	3000			
		* 1/100	11/1080	15	18	97	80.4	3180			
	28	1/100	13/1353	15	18	117	98	3690	P.166	P.168	P.171
		1/120	91/11000	12.5	15	140	117	4320			
		1/160	1/165	9.4	11.2	187	156	4450			
		1/200	7/1375	7.5	9	234	195	4450			
3-Phase 0.4 kW	22	1/5	7/34	300	360	12	10	1140	P.165	P.168	P.170
		1/10	7/68	150	180	25	21	1530			
		1/15	49/748	100	120	36	30	1780			
		1/20	7/136	75	90	48	40	1910			
		1/25	7/170	60	72	61	50	2050			
	28	1/30	1/30	50	60	73	61	3310	P.166	P.168	P.171
		1/40	221/8610	37.5	45	94	78	3690			
		1/50	187/9030	30	36	117	98	4080			
		1/60	169/9840	25	30	140	117	4450			
		1/80	65/5166	18.8	22.5	187	156	4450			
		* 1/100	55/5418	15	18	193	161	4450			
	32	1/100	7/688	15	18	234	195	6370	P.166	P.169	P.171
		1/120	77/9360	12.5	15	281	234	7640			
		1/160	21/3328	9.4	11.2	374	313	7640			
		1/200	189/38272	7.5	9	431	390	7640			

Motor Power	Frame Size	Reduction Ratio	Actual Reduction Ratio	Output Shaft Speed		Allowable Output Shaft Torque		Allowable Output Shaft O.H.L.	Drawings		
				r/min		N·m		N	Foot Mount	Flange Mount	Small Flange Mount
				50 Hz	60 Hz	50 Hz	60 Hz				
3-Phase 0.75 kW	28	1/5	91/459	300	360	23	19	1650	P.166	P.168	P.171
		1/10	1/10	150	180	45	38	2280			
		1/15	91/1360	100	120	68	57	2800			
		1/20	5/102	75	90	91	75	3050			
		1/25	7/170	60	72	114	94	3180			
	32	1/30	3/92	50	60	136	114	5220	P.166	P.169	P.171
		1/40	13/516	37.5	45	175	146	5470			
		1/50	11/540	30	36	220	183	5780			
		1/60	13/774	25	30	264	220	6080			
		1/80	13/1032	18.8	22.5	351	293	6180			
		* 1/100	11/1080	15	18	362	302	6770			
	40	1/100	91/9000	15	18	439	366	9170	P.167	P.169	-
		1/120	77/9400	12.5	15	527	439	9170			
		1/160	9/1400	9.4	11.2	703	585	9170			
		1/200	9/1750	7.5	9	764	732	9170			

Note 1: Please be sure to read the notes on page 163.

3-3. Drawings

G3 Type Parallel Shaft | Shaft Diameter **18** | **Foot** Mounting

<Figure 1>

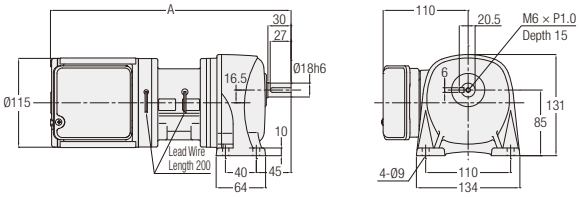

Number of Phases	Power	Part Number	Reduction Ratio	Figure Number	Approx. Weight (kg)	A
3-Phase	0.1 kW	G3L18N∗∗∗-EM01T◇JTN	5, 10, 15, 20, 25, 30, 40, 50	1	7	311.5
	0.2 kW	G3L18N∗∗∗-EM02T◇JTN	5, 10, 15, 20, 25	1	9	326.5

Note: A reduction ratio will be indicated as ∗∗∗ in the nomenclature. In addition, a supply voltage code will be indicated as ◇.
Note: Please refer to page 163 for the performance table.

G3 Type Parallel Shaft | Shaft Diameter **22** | **Foot** Mounting

<Figure 2>

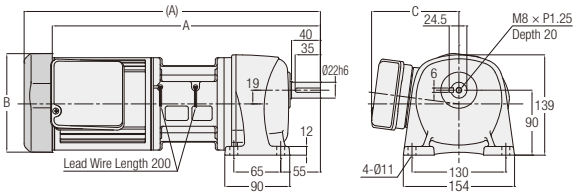

Note: The value in parentheses is the value of a gearmotor with a motor power of 0.4 kW.

Number of Phases	Power	Part Number	Reduction Ratio	Figure Number	Approx. Weight (kg)	A	B	C
3-Phase	0.1 kW	G3L22N∗∗∗-EM01T◇JTN	60, 80, 100, 120, 160, 200	2	8.5	337.5	Ø115	110
	0.2 kW	G3L22N∗∗∗-EM02T◇JTN	30, 40, 50, 60, 80, 100	2	10	352.5	Ø115	110
	0.4 kW	G3L22N∗∗∗-EM04T◇JTN	5, 10, 15, 20, 25	2	12.5	410.5	□137	121

Note: A reduction ratio will be indicated as ∗∗∗ in the nomenclature. In addition, a supply voltage code will be indicated as ◇.
Note: Please refer to page 163 for the performance table.

G3 Type Parallel Shaft | Shaft Diameter 28 | Foot Mounting

<Figure 1>

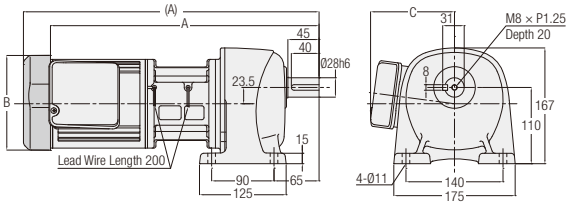

<Figure 2>

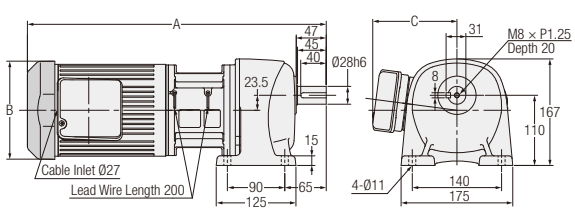

Note: The value in parentheses is the value of a gearmotor with a motor power of 0.4 kW.

Number of Phases	Power	Part Number	Reduction Ratio	Figure Number	Approx. Weight (kg)	A	B	C
3-Phase	0.2 kW	G3L28N∗∗∗-EM02T◇JTN	100, 120, 160, 200	1	12	365.5	Ø115	110
	0.4 kW	G3L28N∗∗∗-EM04T◇JTN	30, 40, 50, 60, 80, 100	1	14.5	426.5	□137	121
	0.75 kW	G3L28N∗∗∗-ER08T◇JTN	5, 10, 15, 20, 25	2	22	468.5	□154	132

Note: A reduction ratio will be indicated as ∗∗∗ in the nomenclature. In addition, a supply voltage code will be indicated as ◇.
Note: Please refer to page 163 for the performance table.

G3 Type Parallel Shaft | Shaft Diameter 32 | Foot Mounting

<Figure 3>

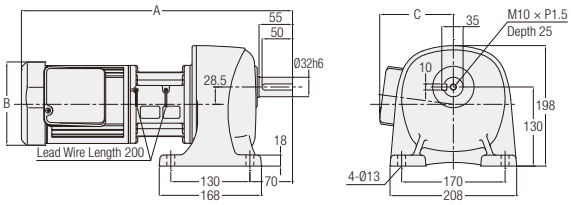

<Figure 4>

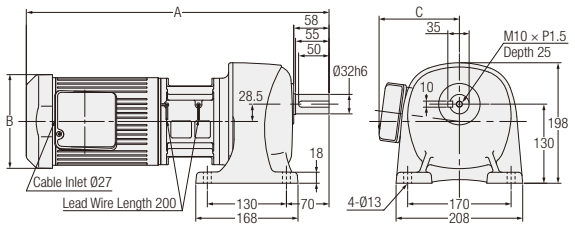

Number of Phases	Power	Part Number	Reduction Ratio	Figure Number	Approx. Weight (kg)	A	B	C
3-Phase	0.4 kW	G3L32N∗∗∗-EM04T◇JTN	100, 120, 160, 200	3	17.5	445.5	□138	121
	0.75 kW	G3L32N∗∗∗-ER08T◇JTN	30, 40, 50, 60, 80, 100	4	25.5	497.5	□154	132

Note: A reduction ratio will be indicated as ∗∗∗ in the nomenclature. In addition, a supply voltage code will be indicated as ◇.
Note: Please refer to page 163 for the performance table.

G3 Type Parallel Shaft | Shaft Diameter **40** | **Foot** Mounting

<Figure 1>

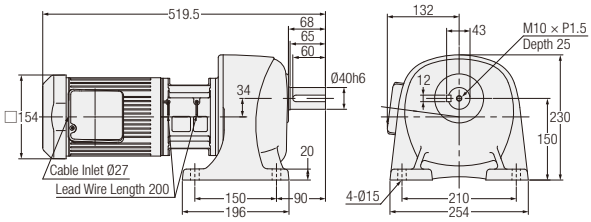

Number of Phases	Power	Part Number	Reduction Ratio	Figure Number	Approx. Weight (kg)
3-Phase	0.75 kW	G3L40N∗∗∗-ER08T◇JTN	100, 120, 160, 200	1	32

Note: A reduction ratio will be indicated as ∗∗∗ in the nomenclature. In addition, a supply voltage code will be indicated as ◇.
Note: Please refer to page 164 for the performance table.

G3 Type Parallel Shaft | Shaft Diameter **18** | **Flange** Mounting

<Figure 2>

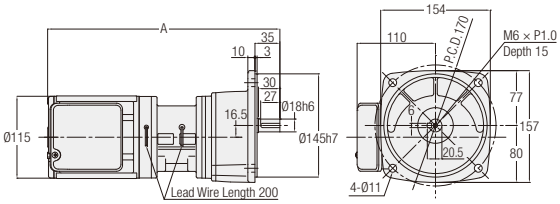

Number of Phases	Power	Part Number	Reduction Ratio	Figure Number	Approx. Weight (kg)	A
3-Phase	0.1 kW	G3F18N∗∗∗-EM01T◇JTN	5, 10, 15, 20, 25, 30, 40, 50	2	7.5	311.5
	0.2 kW	G3F18N∗∗∗-EM02T◇JTN	5, 10, 15, 20, 25	2	9.5	326.5

Note: A reduction ratio will be indicated as ∗∗∗ in the nomenclature. In addition, a supply voltage code will be indicated as ◇.
Note: Please refer to page 163 for the performance table.

G3 Type Parallel Shaft | Shaft Diameter 22 | Flange Mounting

<Figure 1>

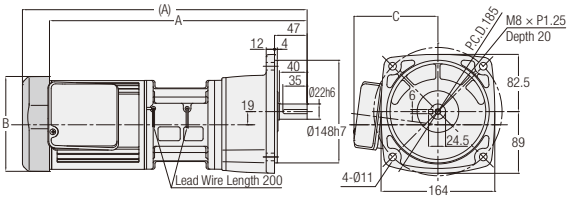

Note: The value in parentheses is the value of a gearmotor with a motor power of 0.4 kW.

Number of Phases	Power	Part Number	Reduction Ratio	Figure Number	Approx. Weight (kg)	A	B	C
3-Phase	0.1 kW	G3F22N∗∗∗-EM01T◇JTN	60, 80, 100, 120, 160, 200	1	9	337.5	Ø115	110
	0.2 kW	G3F22N∗∗∗-EM02T◇JTN	30, 40, 50, 60, 80, 100	1	10.5	352.5	Ø115	110
	0.4 kW	G3F22N∗∗∗-EM04T◇JTN	5, 10, 15, 20, 25	1	13	410.5	□137	121

Note: A reduction ratio will be indicated as ∗∗∗ in the nomenclature. In addition, a supply voltage code will be indicated as ◇.
Note: Please refer to page 163 for the performance table.

G3 Type Parallel Shaft | Shaft Diameter 28 | Flange Mounting

<Figure 2>

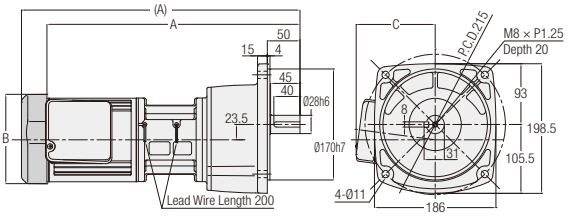

<Figure 3>

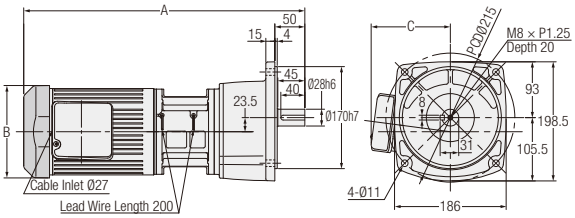

Note: The value in parentheses is the value of a gearmotor with a motor power of 0.4 kW

Number of Phases	Power	Part Number	Reduction Ratio	Figure Number	Approx. Weight (kg)	A	B	C
3-Phase	0.2 kW	G3F28N∗∗∗-EM02T◇JTN	100, 120, 160, 200	2	12.5	365.5	Ø115	110
	0.4 kW	G3F28N∗∗∗-EM04T◇JTN	30, 40, 50, 60, 80, 100	2	15	426.5	□137	121
	0.75 kW	G3F28N∗∗∗-ER08T◇JTN	5, 10, 15, 20, 25	3	22.5	468.5	□154	132

Note: A reduction ratio will be indicated as ∗∗∗ in the nomenclature. In addition, a supply voltage code will be indicated as ◇.
Note: Please refer to page 163 for the performance table.

G3 Type Parallel Shaft | Shaft Diameter **32** | **Flange** Mounting

<Figure 1>

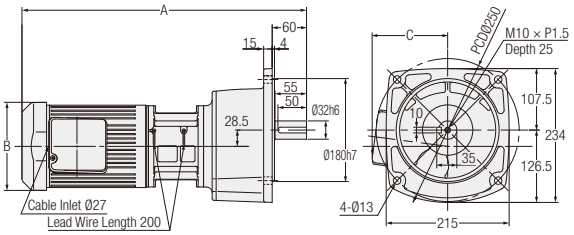

Number of Phases	Power	Part Number	Reduction Ratio	Figure Number	Approx. Weight (kg)	A	B	C
3-Phase	0.4 kW	G3F32N∗∗∗-EM04T◇JTN	100, 120, 160, 200	1	18	445.5	□137	121
	0.75 kW	G3F32N∗∗∗-ER08T◇JTN	30, 40, 50, 60, 80, 100	1	26	497.5	□154	132

Note: A reduction ratio will be indicated as ∗∗∗ in the nomenclature. In addition, a supply voltage code will be indicated as ◇.
Note: Please refer to page 163 for the performance table.

G3 Type Parallel Shaft | Shaft Diameter **40** | **Flange** Mounting

<Figure 2>

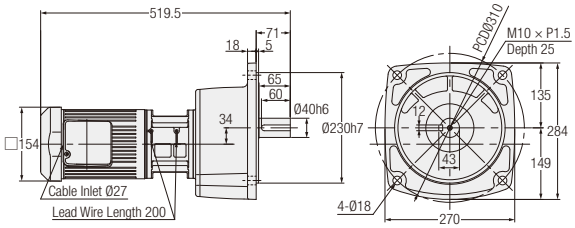

Number of Phases	Power	Part Number	Reduction Ratio	Figure Number	Approx. Weight (kg)
3-Phase	0.75 kW	G3F40N∗∗∗-ER08T◇JTN	100, 120, 160, 200	2	26

Note: A reduction ratio will be indicated as ∗∗∗ in the nomenclature. In addition, a supply voltage code will be indicated as ◇.
Note: Please refer to page 164 for the performance table.

G3 Type Parallel Shaft | Shaft Diameter 18 | Small Flange Mounting

<Figure 1>

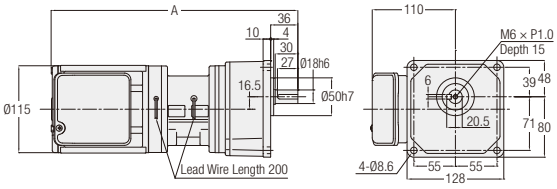

Number of Phases	Power	Part Number	Reduction Ratio	Figure Number	Approx. Weight (kg)	A
3-Phase	0.1 kW	G3K18N∗∗∗-EM01T◇JTN	5, 10, 15, 20, 25, 30, 40, 50	1	7.5	311.5
	0.2 kW	G3K18N∗∗∗-EM02T◇JTN	5, 10, 15, 20, 25	1	9.5	326.5

Note: A reduction ratio will be indicated as ∗∗∗ in the nomenclature. In addition, a supply voltage code will be indicated as ◇.
Note: Please refer to page 163 for the performance table.

G3 Type Parallel Shaft | Shaft Diameter 22 | Small Flange Mounting

<Figure 2>

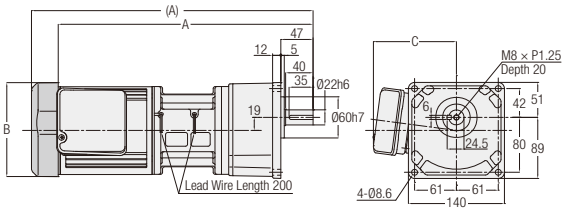

Note: The value in parentheses is the value of a gearmotor with a motor power of 0.4 kW.

Number of Phases	Power	Part Number	Reduction Ratio	Figure Number	Approx. Weight (kg)	A	B	C
3-Phase	0.1 kW	G3K22N∗∗∗-EM01T◇JTN	60, 80, 100, 120, 160, 200	2	9	337.5	Ø115	110
	0.2 kW	G3K22N∗∗∗-EM02T◇JTN	30, 40, 50, 60, 80, 100	2	10.5	352.5	Ø115	110
	0.4 kW	G3K22N∗∗∗-EM04T◇JTN	5, 10, 15, 20, 25	2	13	410.5	□137	121

Note: A reduction ratio will be indicated as ∗∗∗ in the nomenclature. In addition, a supply voltage code will be indicated as ◇.
Note: Please refer to page 163 for the performance table.

G3 Type Parallel Shaft | Shaft Diameter **28** | **Small Flange** Mounting

<Figure 1>

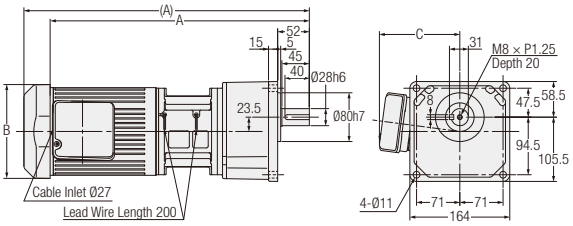

Note: The value in parentheses is the value of a gearmotor with a motor power of 0.4 kW or 0.75 kW.

Number of Phases	Power	Part Number	Reduction Ratio	Figure Number	Approx. Weight (kg)	A	B	C
3-Phase	0.2 kW	G3K28N∗∗∗-EM02T◇JTN	100, 120, 160, 200	1	12.5	365.5	Ø115	110
	0.4 kW	G3K28N∗∗∗-EM04T◇JTN	30, 40, 50, 60, 80, 100	1	15	426.5	□137	121
	0.75 kW	G3K28N∗∗∗-ER08T◇JTN	5, 10, 15, 20, 25	1	22.5	468.5	□154	132

Note: A reduction ratio will be indicated as ∗∗∗ in the nomenclature. In addition, a supply voltage code will be indicated as ◇.
Note: Please refer to page 163 for the performance table.

G3 Type Parallel Shaft | Shaft Diameter **32** | **Small Flange** Mounting

<Figure 2>

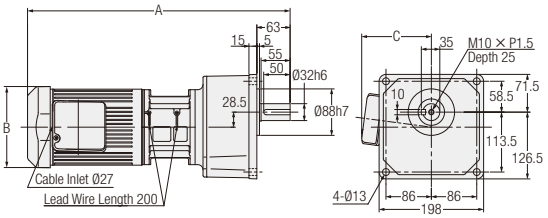

Number of Phases	Power	Part Number	Reduction Ratio	Figure Number	Approx. Weight (kg)	A	B	C
3-Phase	0.4 kW	G3K32N∗∗∗-EM04T◇JTN	100, 120, 160, 200	2	18	445.5	□137	121
	0.75 kW	G3K32N∗∗∗-ER08T◇JTN	30, 40, 50, 60, 80, 100	2	26	497.5	□154	132

Note: A reduction ratio will be indicated as ∗∗∗ in the nomenclature. In addition, a supply voltage code will be indicated as ◇.
Note: Please refer to page 163 for the performance table.

4. Speed Control Gearmotors

4-1. Properties and Motor Characteristics Table

Properties

This gearmotor has a motor provided with a rate generator (AC generator) for speed detection and can control the speed freely in a wide range of 50 to 1400 r/min (50 Hz) or 50 to 1700 r/min (60 Hz) by means of a dedicated speed controller.

■ Properties

❶ Wide variable speed range
Our original circuit design enables the induction gearmotor to operate continuously from a low speed range of 50 r/min.

Power Source Frequency	Variable speed range
50 Hz	50 to 1400 r/min
60 Hz	50 to 1700 r/min

❷ Outstanding output characteristic
The induction motor ensures a high allowable load torque value in the low speed range and has a wide high-speed range characteristic as shown in the right figure.

❸ Wide variety of types
Induction gearmotors are available in eight main types according to applications: two U types (100 V, 200 V) connectable by means of a lead wire with a connector and six plug-in P types (100 V, 200 V).
Note: Please refer to page 631 for detailed specifications.

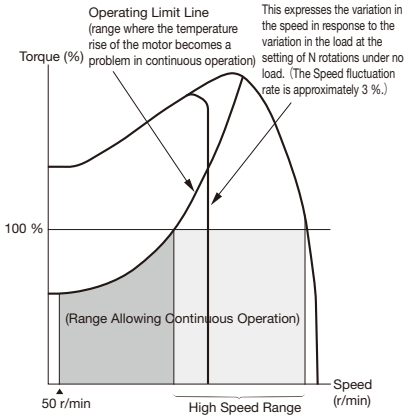

Note: The same speed can be obtained from a speed control gearmotor, regardless of the power supply frequency. For example, a speed set in the 50 Hz region remains unchanged also in the 60 Hz region, and the same speed can be obtained. (However, the maximum speed is within the range of 1400 r/min.)

Motor Characteristics Table

G Type 1-Phase (Speed Control Gearmotors)

Series	Power (W)	Voltage (V)	Frequency (Hz)	Frame Size	Max Current (A)	High Speed Range (r/min)	Capacitor (μF)
MINI	15 W	100/100	50/60	12	0.6/0.6	500 to 1350/550 to 1650	6
				22	0.6/0.6	500 to 1350/550 to 1650	6
		200/200	50/60	12	0.3/0.3	600 to 1400/750 to 1700	1.5
				22	0.3/0.3	600 to 1400/750 to 1700	1.5
	25 W	100/100	50/60	12	0.6/0.6	750 to 1350/1000 to 1650	8
				15	0.7/0.7	550 to 1400/650 to 1650	8
				22	0.6/0.6	750 to 1350/1000 to 1650	8
				28	0.7/0.7	550 to 1400/650 to 1650	8
		200/200	50/60	12	0.4/0.4	850 to 1350/1000 to 1650	2
				15	0.4/0.4	600 to 1350/800 to 1650	2
				22	0.4/0.4	850 to 1350/1000 to 1650	2
				28	0.4/0.4	600 to 1350/800 to 1650	2
	40 W	100/100	50/60	15	0.9/0.9	800 to 1350/1050 to 1650	12
				18	1.1/0.9	850 to 1400/1200 to 1700	12
				28	0.9/0.9	800 to 1350/1050 to 1650	12
				32	0.9/0.9	800 to 1350/1050 to 1650	12
		200/200	50/60	15	0.5/0.5	900 to 1350/1300 to 1650	3
				18	0.6/0.6	850 to 1400/1100 to 1700	3
				28	0.5/0.5	900 to 1350/1300 to 1650	3
				32	0.5/0.5	900 to 1350/1300 to 1650	3
	60 W	100/100	50/60	15	1.0/1.7	700 to 1350/800 to 1650	20
				18	1.3/1.3	500 to 1400/650 to 1650	20
				28	1.0/1.7	700 to 1350/800 to 1650	20
				32	1.0/1.7	700 to 1350/800 to 1650	20
		200/200	50/60	15	0.8/0.9	700 to 1350/800 to 1650	5
				18	0.8/0.9	750 to 1400/850 to 1650	5
				28	0.8/0.9	700 to 1350/800 to 1650	5
				32	0.8/0.9	700 to 1350/800 to 1650	5
	90 W	100/100	50/60	15	1.4/2.0	950 to 1300/1150 to 1600	26
				18	1.4/2.0	950 to 1350/1100 to 1650	26
				28	1.4/2.0	950 to 1300/1150 to 1600	26
				32	1.4/2.0	950 to 1300/1150 to 1600	26
				40	1.4/2.0	950 to 1350/1100 to 1650	26
		200/200	50/60	15	0.9/1.0	1000 to 1350/1150 to 1600	6.5
				18	1.0/1.1	900 to 1350/1100 to 1650	6.5
				28	0.9/1.0	1000 to 1350/1150 to 1600	6.5
				32	0.9/1.0	1000 to 1350/1150 to 1600	6.5
				40	1.0/1.1	900 to 1350/1100 to 1650	6.5

4-2. Graph for Speed Characteristics

Torque-Speed Characteristic Graph

<1-Phase15 W>

■ 100 V

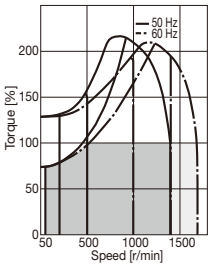

■ 200 V

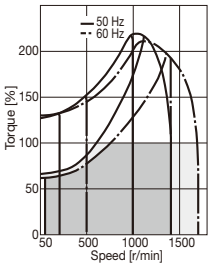

<1-Phase 25 W>

■ Frame Size 12, 22/100 V

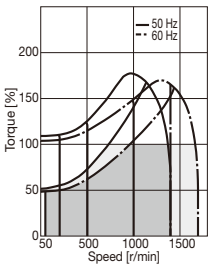

■ Frame Size 12, 22/200 V

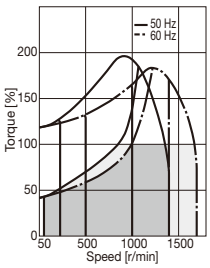

■ Frame Size 15, 28/100 V

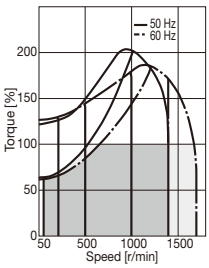

■ Frame Size 15, 28/200 V

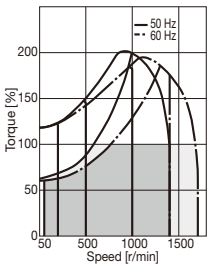

<1-Phase 40 W>

■ Frame Size 15, 28, 32/100 V

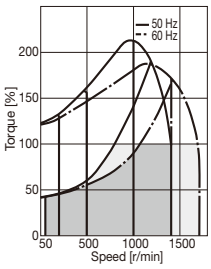

■ Frame Size 15, 28, 32/200 V

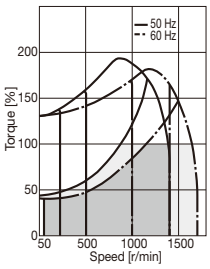

■ Frame Size 18/100 V

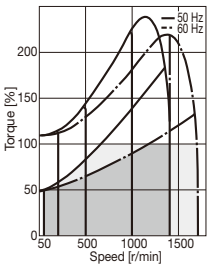

■ Frame Size 18/200 V

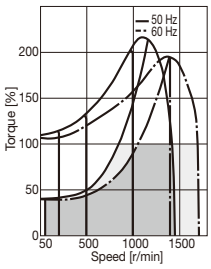

<1-Phase 60 W>

■ Frame Size 15, 28, 32/100 V

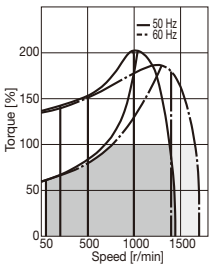

■ Frame Size 15, 28, 32/200 V

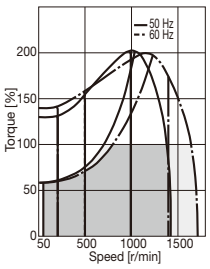

■ Frame Size 18/100 V

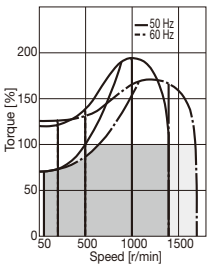

■ Frame Size 18/200 V

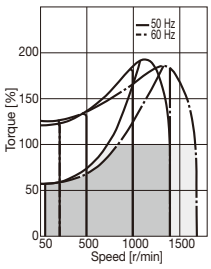

<1-Phase 90 W>

■ Frame Size 15, 28, 32/100 V

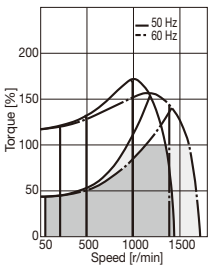

■ Frame Size 15, 28, 32/200 V

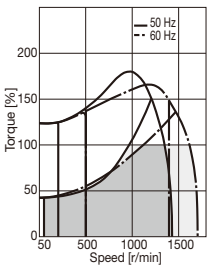

■ Frame Size 18, 40/100 V

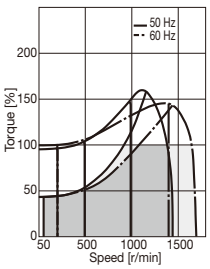

■ Frame Size 18, 40/200 V

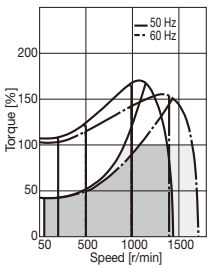

Note: 100 % torque represents the allowable output shaft torque at high speed.

4-3. Performance Table

[Notes]
- The output shaft speed is the value relative to the synchronous speed of the motor and the reduction ratio.
- The allowable output shaft torque at high speed represents the allowable output shaft torque in the high speed range (r/min).
- The value (%) of the allowable output shaft torque at 50 r/min represents the ratio to the allowable output shaft torque at high speed.
- Allowable output shaft O.H.L. is the value at the middle of the output shaft.
- The "*" mark indicates a limited torque type. Please make sure to check the allowable output shaft torque in the performance table.
- ▭ in the performance table indicates that the shaft rotates clockwise when viewed from the output shaft side when the connection is made as shown on page 546 (CW). (Refer to the figure on the right)

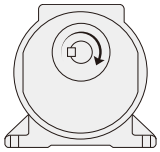

Series	Motor Power	Frame Size	Reduction Ratio	Actual Reduction Ratio	Output Shaft Speed r/min 50 Hz	Output Shaft Speed r/min 60 Hz	Allowable Output Shaft O.H.L. N	Allowable Output Shaft Torque At High Speed N·m	Allowable Output Shaft Torque At 50 r/min (%)	Drawings Foot Mount	Drawings Flange Mount	Drawings Small Flange Mount
MINI	1-Phase 15 W	12	1/5	1/5	300	360	98	0.29	70 (100 V) 60 (200 V)	P.177	P.182	-
			1/7.5	1/7.5	200	240	196	0.49				
			1/10	1/10	150	180	245	0.69				
			1/15	1/15	100	120	343	0.98				
			1/20	1/20	75	90	441	1.27				
			1/25	1/25	60	72	490	1.67				
			1/30	1/29	50	60	539	1.96				
			1/40	1/40	37.5	45	588	2.65				
			1/50	1/50	30	36	637	3.33				
			1/60	1/58	25	30	686	3.92				
			1/80	1/80	18.8	22.5	735	5.00				
			1/100	1/100	15	18	735	6.27				
			1/120	1/120	12.5	15	784	7.45				
			1/160	1/160	9.4	11.2	784	9.80				
			1/200	1/200	7.5	9	784	12.7				
			1/240	1/232	6.3	7.5	784	14.7				
		22	1/300	91/27000	5	6	1760	16.7	70 (100 V) 60 (200 V)	P.180	P.183	P.185
			1/375	11/4050	4	4.8	1760	20.6				
			1/450	637/297000	3.3	4	1760	25.5				
			1/600	91/54000	2.5	3	1760	33.3				
			1/750	11/8100	2	2.4	1760	42.1				
			1/900	637/594000	1.7	2	1760	50				
			1/1200	91/10440	1.3	1.5	1760	66.6				
			1/1500	11/15660	1	1.2	1760	83.3				
			1/1800	637/1148400	0.8	1	1760	98				
	1-Phase 25 W	12	1/5	1/5	300	360	98	0.59	50 (100 V) 45 (200 V)	P.177	P.182	-
			1/7.5	1/7.5	200	240	196	0.78				
			1/10	1/10	150	180	245	1.08				
			1/15	1/15	100	120	343	1.67				
			1/20	1/20	75	90	441	2.25				
			1/25	1/25	60	72	490	2.74				
			1/30	1/29	50	60	539	3.33				
			1/40	1/40	37.5	45	588	4.41				
			1/50	1/50	30	36	637	5.49				
			1/60	1/58	25	30	686	6.66				
			1/80	1/80	18.8	22.5	735	8.43				
			1/100	1/100	15	18	735	10.8				
			1/120	1/120	12.5	15	784	12.7				
		15	1/160	1/160	9.4	11.2	1080	16.7	60 (100 V) (200 V)	P.178	P.182	-
			1/200	1/200	7.5	9	1080	20.6				
			1/240	1/232	6.3	7.5	1080	25.5				
		22	1/300	91/27000	5	6	1760	28.4	50 (100 V) 45 (200 V)	P.180	P.183	P.185
			1/375	11/4050	4	4.8	1760	35.3				
			1/450	637/297000	3.3	4	1760	42.1				
			1/600	91/54000	2.5	3	1760	55.9				
			1/750	11/8100	2	2.4	1760	69.6				
			1/900	637/594000	1.7	2	1760	84.3				
		28	1/1200	221/249690	1.3	1.5	2740	108	60 (100 V) (200 V)	P.180	P.184	P.186
			1/1500	187/261870	1	1.2	2740	137				
			1/1800	169/285360	0.8	1	2740	167				

4-3. Performance Table

Series	Motor Power	Frame Size	Reduction Ratio	Actual Reduction Ratio	Output Shaft Speed r/min 50 Hz	Output Shaft Speed r/min 60 Hz	Allowable Output Shaft O.H.L. N	Allowable Output Shaft Torque At High Speed N·m	Allowable Output Shaft Torque At 50 r/min (%)	Drawings Foot Mount	Drawings Flange Mount	Drawings Small Flange Mount
MINI	1-Phase 40 W	15	1/5	1/5	300	360	98	0.88	40 (100 V) (200 V)	P.178	P.182	-
			1/7.5	1/7.5	200	240	196	1.37				
			1/10	1/10	150	180	245	1.76				
			1/15	1/15	100	120	343	2.65				
			1/20	1/20	75	90	441	3.53				
			1/25	1/25	60	72	490	4.41				
			1/30	1/29	50	60	539	5.29				
			1/40	1/40	37.5	45	784	7.06				
			1/50	1/50	30	36	882	8.82				
			1/60	1/58	25	30	882	10.8				
			1/80	1/80	18.8	22.5	980	13.7				
			1/100	1/100	15	18	980	16.7				
			1/120	1/120	12.5	15	1080	20.6				
		18	1/160	1/160	9.4	11.2	1370	26.5	50 (100 V) 40 (200 V)	P.179	P.183	-
			1/200	1/200	7.5	9	1370	33.3				
			1/240	1/240	6.3	7.5	1370	40.2				
		28	1/300	91/27000	5	6	2740	45.1	40 (100 V) (200 V)	P.180	P.184	P.186
			1/375	11/4050	4	4.8	2740	55.9				
			1/450	637/297000	3.3	4	2740	67.6				
			1/600	221/129150	2.5	3	2740	90.2				
			1/750	187/135450	2	2.4	2740	118				
			1/900	169/147600	1.7	2	2740	137				
		32	1/1200	13/14964	1.3	1.5	5100	176	40 (100 V) (200 V)	P.181	P.184	P.186
			1/1500	11/15660	1	1.2	5100	225				
			1/1800	13/22446	0.8	1	5100	274				
	1-Phase 60 W	15	1/5	1/5	300	360	98	1.37	60 (100 V) 55 (200 V)	P.178	P.182	-
			1/7.5	1/7.5	200	240	196	2.06				
			1/10	1/10	150	180	245	2.74				
			1/15	1/15	100	120	343	4.12				
			1/20	1/20	75	90	441	5.49				
			1/25	1/25	60	72	490	6.96				
			1/30	1/29	50	60	539	8.33				
			1/40	1/40	37.5	45	784	10.8				
			1/50	1/50	30	36	882	13.7				
			1/60	1/58	25	30	882	16.7				
		18	1/80	1/80	18.8	22.5	1270	20.6	70 (100 V) 55 (200 V)	P.179	P.183	-
			1/100	1/100	15	18	1270	26.5				
			1/120	1/120	12.5	15	1370	31.4				
			1/160	1/160	9.4	11.2	1370	42.1				
			1/200	1/200	7.5	9	1370	52.9				
			* 1/240	1/240	6.3	7.5	1370	53.9				
		28	1/300	91/27000	5	6	2740	70.6	60 (100 V) 55 (200 V)	P.180	P.184	P.186
			1/375	11/4050	4	4.8	2740	88.2				
			1/450	637/297000	3.3	4	2740	108				
			1/600	221/129150	2.5	3	2740	137				
			1/750	187/135450	2	2.4	2740	176				
			1/900	169/147600	1.7	2	2740	216				
		32	1/1200	13/14964	1.3	1.5	5100	284	60 (100 V) 55 (200 V)	P.181	P.184	P.186
			1/1500	11/15660	1	1.2	5100	353				
			1/1800	13/22446	0.8	1	5100	421				

Series	Motor Power	Frame Size	Reduction Ratio	Actual Reduction Ratio	Output Shaft Speed r/min 50 Hz	Output Shaft Speed r/min 60 Hz	Allowable Output Shaft O.H.L. N	Allowable Output Shaft Torque At High Speed N·m	Allowable Output Shaft Torque At 50 r/min (%)	Drawings Foot Mount	Drawings Flange Mount	Drawings Small Flange Mount
MINI	1-Phase 90 W	15	1/5	1/5	300	360	147	2.06	40 (100 V) (200 V)	P.178	P.182	-
			1/7.5	1/7.5	200	240	245	3.14				
			1/10	1/10	150	180	343	4.12				
			1/15	1/15	100	120	441	6.17				
			1/20	1/20	75	90	539	8.33				
			1/25	1/25	60	72	588	10.8				
			1/30	1/29	50	60	686	12.7				
		18	1/40	1/40	37.5	45	1080	16.7	40 (100 V) (200 V)	P.179	P.183	-
			1/50	1/50	30	36	1180	20.6				
			1/60	1/60	25	30	1180	24.5				
			1/80	1/80	18.8	22.5	1270	31.4				
			1/100	1/100	15	18	1270	39.2				
			1/120	1/120	12.5	15	1370	47.0				
			* 1/160	1/160	9.4	11.2	1370	53.9				
			* 1/200	1/200	7.5	9	1370	53.9				
			* 1/240	1/240	6.3	7.5	1370	53.9				
		28	1/300	221/64575	5	6	2740	108	40 (100 V) (200 V)	P.180	P.184	P.186
			1/375	187/67725	4	4.8	2740	137				
			1/450	169/73800	3.3	4	2740	157				
		32	1/600	13/7740	2.5	3	5100	216	40 (100 V) (200 V)	P.181	P.184	P.186
			1/750	11/8100	2	2.4	5100	265				
			1/900	13/11610	1.7	2	5100	314				
		40	1/1200	13/14964	1.3	1.5	7060	421	40 (100 V) (200 V)	P.181	P.185	-
			1/1500	11/15660	1	1.2	7060	529				
			1/1800	13/22443	0.8	1	7060	637				

Note 1: Please be sure to read the notes on page 174.

4-4. Drawings

G Type Parallel Shaft | Shaft Diameter 12 | **Foot** Mounting

<Figure 1>

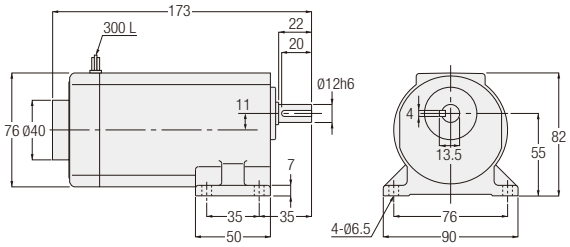

Number of Phases	Power	Part Number	Reduction Ratio	Figure Number	Controller	Approx. Weight (kg)
1-Phase	15 W	GLU-12-∗∗∗-S15	5, 7.5, 10, 15, 20, 25, 30, 40, 50, 60, 80, 100, 120, 160, 200, 240	1	Set	2
		GLU-12-∗∗∗-S15W				
		GLP-12-∗∗∗-S15	5, 7.5, 10, 15, 20, 25, 30, 40, 50, 60, 80, 100, 120, 160, 200, 240	1	Sold Separately	2
		GLP-12-∗∗∗-S15W				
	25 W	GLU-12-∗∗∗-S25	5, 7.5, 10, 15, 20, 25, 30, 40, 50, 60, 80, 100, 120	1	Set	2
		GLU-12-∗∗∗-S25W				
		GLP-12-∗∗∗-S25	5, 7.5, 10, 15, 20, 25, 30, 40, 50, 60, 80, 100, 120	1	Sold Separately	2
		GLP-12-∗∗∗-S25W				

Note: A reduction ratio will be indicated as ∗∗∗ in the nomenclature.
Note: Please refer to page 174 for the performance table.

G Type Parallel Shaft | Shaft Diameter **15** | **Foot** Mounting

<Figure 1>

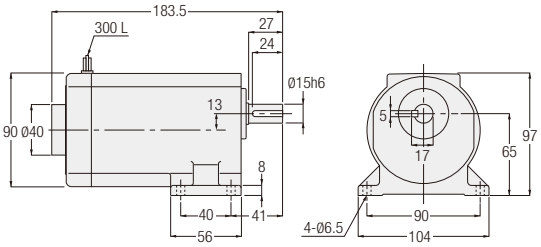

<Figure 2>

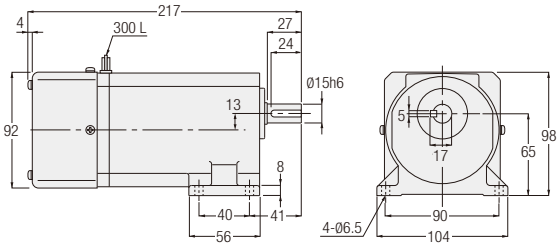

Number of Phases	Power	Part Number	Reduction Ratio	Figure Number	Controller	Approx. Weight (kg)
1-Phase	25 W	GLU-15-∗∗∗-S25	160, 200, 240	1	Set	3
		GLU-15-∗∗∗-S25W				
		GLP-15-∗∗∗-S25	160, 200, 240	1	Sold Separately	3
		GLP-15-∗∗∗-S25W				
	40 W	GLU-15-∗∗∗-S40	5, 7.5, 10, 15, 20, 25, 30, 40, 50, 60, 80, 100, 120	1	Set	3
		GLU-15-∗∗∗-S40W				
		GLP-15-∗∗∗-S40	5, 7.5, 10, 15, 20, 25, 30, 40, 50, 60, 80, 100, 120	1	Sold Separately	3
		GLP-15-∗∗∗-S40W				
	60 W	GLU-15-∗∗∗-S60	5, 7.5, 10, 15, 20, 25, 30, 40, 50, 60	2	Set	3
		GLU-15-∗∗∗-S60W				
		GLP-15-∗∗∗-S60	5, 7.5, 10, 15, 20, 25, 30, 40, 50, 60	2	Sold Separately	3
		GLP-15-∗∗∗-S60W				
	90 W	GLU-15-∗∗∗-S90	5, 7.5, 10, 15, 20, 25, 30	2	Set	3
		GLU-15-∗∗∗-S90W				
		GLP-15-∗∗∗-S90	5, 7.5, 10, 15, 20, 25, 30	2	Sold Separately	3
		GLP-15-∗∗∗-S90W				

Note: A reduction ratio will be indicated as ∗∗∗ in the nomenclature.
Note: Please refer to page 174 for the performance table.

G Type Parallel Shaft | Shaft Diameter **18** | **Foot** Mounting

<Figure 1>

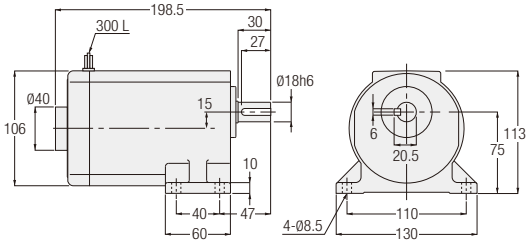

<Figure 2>

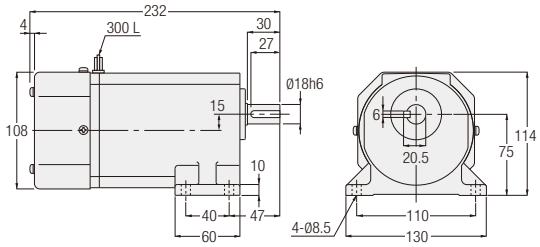

Number of Phases	Power	Part Number	Reduction Ratio	Figure Number	Controller	Approx. Weight (kg)
1-Phase	40 W	GLU-18-∗∗∗-S40	160, 200, 240	1	Set	4
		GLU-18-∗∗∗-S40W				
		GLP-18-∗∗∗-S40	160, 200, 240	1	Sold Separately	4
		GLP-18-∗∗∗-S40W				
	60 W	GLU-18-∗∗∗-S60	80, 100, 120, 160, 200, 240	2	Set	4
		GLU-18-∗∗∗-S60W				
		GLP-18-∗∗∗-S60	80, 100, 120, 160, 200, 240	2	Sold Separately	4
		GLP-18-∗∗∗-S60W				
	90 W	GLU-18-∗∗∗-S90	40, 50, 60, 80, 100, 120, 160, 200, 240	2	Set	4
		GLU-18-∗∗∗-S90W				
		GLP-18-∗∗∗-S90	40, 50, 60, 80, 100, 120, 160, 200, 240	2	Sold Separately	4
		GLP-18-∗∗∗-S90W				

Note: A reduction ratio will be indicated as ∗∗∗ in the nomenclature.
Note: Please refer to page 175 for the performance table.

G Type Parallel Shaft | Shaft Diameter 22 | Foot Mounting

<Figure 1>

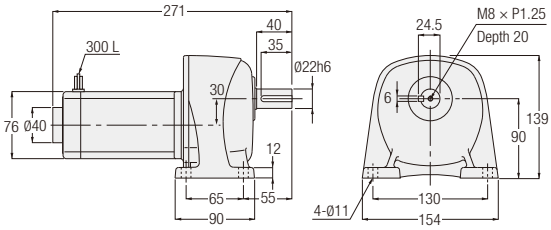

Number of Phases	Power	Part Number	Reduction Ratio	Figure Number	Controller	Approx. Weight (kg)
1-Phase	15 W	GLU-22-***-S15	300, 375, 450, 600, 750, 900, 1200, 1500, 1800	1	Set	5
		GLU-22-***-S15W				
		GLP-22-***-S15	300, 375, 450, 600, 750, 900, 1200, 1500, 1800	1	Sold Separately	5
		GLP-22-***-S15W				
	25 W	GLU-22-***-S25	300, 375, 450, 600, 750, 900	1	Set	5
		GLU-22-***-S25W				
		GLP-22-***-S25	300, 375, 450, 600, 750, 900	1	Sold Separately	5
		GLP-22-***-S25W				

Note: A reduction ratio will be indicated as *** in the nomenclature.
Note: Please refer to page 174 for the performance table.

G Type Parallel Shaft | Shaft Diameter 28 | Foot Mounting

<Figure 2>

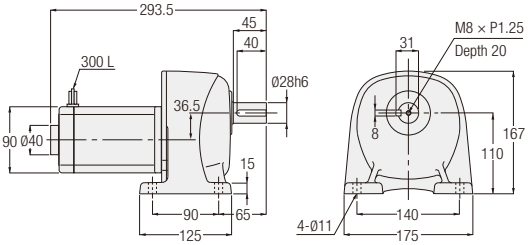

<Figure 3>

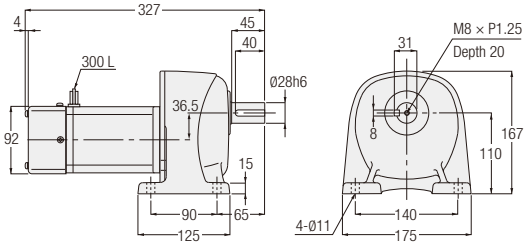

Number of Phases	Power	Part Number	Reduction Ratio	Figure Number	Controller	Approx. Weight (kg)
1-Phase	25 W	GLU-28-***-S25	1200, 1500, 1800	2	Set	7
		GLU-28-***-S25W				
		GLP-28-***-S25	1200, 1500, 1800	2	Sold Separately	7
		GLP-28-***-S25W				
	40 W	GLU-28-***-S40	300, 375, 450, 600, 750, 900	2	Set	7
		GLU-28-***-S40W				
		GLP-28-***-S40	300, 375, 450, 600, 750, 900	2	Sold Separately	7
		GLP-28-***-S40W				
	60 W	GLU-28-***-S60	300, 375, 450, 600, 750, 900	3	Set	7
		GLU-28-***-S60W				
		GLP-28-***-S60	300, 375, 450, 600, 750, 900	3	Sold Separately	7
		GLP-28-***-S60W				
	90 W	GLU-28-***-S90	300, 375, 450	3	Set	7
		GLU-28-***-S90W				
		GLP-28-***-S90	300, 375, 450	3	Sold Separately	7
		GLP-28-***-S90W				

Note: A reduction ratio will be indicated as *** in the nomenclature.
Note: Please refer to page 174 for the performance table.

G Type Parallel Shaft | Shaft Diameter **32** | **Foot** Mounting

<Figure 1>

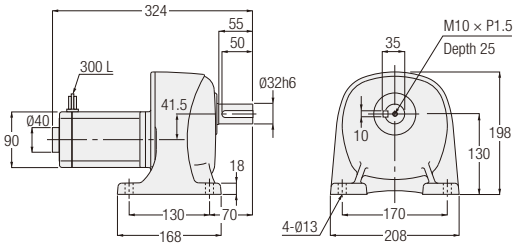

<Figure 2>

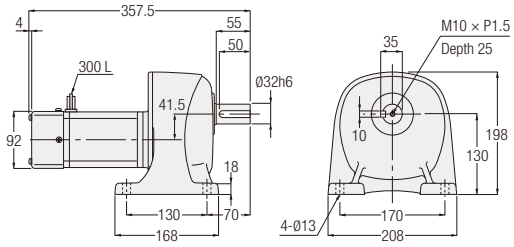

Number of Phases	Power	Part Number	Reduction Ratio	Figure Number	Controller	Approx. Weight (kg)
1-Phase	40 W	GLU-32-***-S40	1200, 1500, 1800	1	Set	11
		GLU-32-***-S40W				
		GLP-32-***-S40	1200, 1500, 1800	1	Sold Separately	11
		GLP-32-***-S40W				
	60 W	GLU-32-***-S60	1200, 1500, 1800	2	Set	11
		GLU-32-***-S60W				
		GLP-32-***-S60	1200, 1500, 1800	2	Sold Separately	11
		GLP-32-***-S60W				
	90 W	GLU-32-***-S90	600, 750, 900	2	Set	11
		GLU-32-***-S90W				
		GLP-32-***-S90	600, 750, 900	2	Sold Separately	11
		GLP-32-***-S90W				

Note: A reduction ratio will be indicated as *** in the nomenclature.
Note: Please refer to page 175 for the performance table.

G Type Parallel Shaft | Shaft Diameter **40** | **Foot** Mounting

<Figure 3>

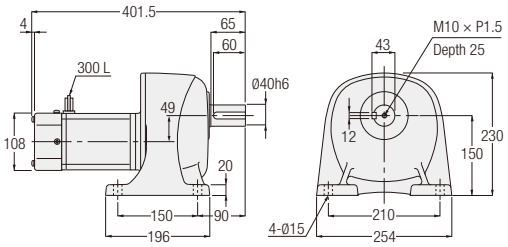

Number of Phases	Power	Part Number	Reduction Ratio	Figure Number	Controller	Approx. Weight (kg)
1-Phase	90 W	GLU-40-***-S90	1200, 1500, 1800	3	Set	15
		GLU-40-***-S90W				
		GLP-40-***-S90	1200, 1500, 1800	3	Sold Separately	15
		GLP-40-***-S90W				

Note: A reduction ratio will be indicated as *** in the nomenclature.
Note: Please refer to page 176 for the performance table.

G Type Parallel Shaft | Shaft Diameter 12 | Flange Mounting

<Figure 1>

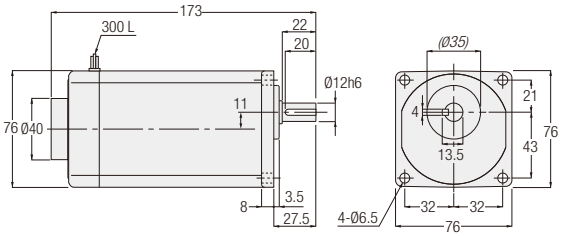

Note: The italic dimension indicates areas with remaining casting surface. Please add 0.5 mm or more to the italic dimension for the diameter of the mating hole.

Number of Phases	Power	Part Number	Reduction Ratio	Figure Number	Controller	Approx. Weight (kg)
1-Phase	15 W	GFU-12-∗∗∗-S15	5, 7.5, 10, 15, 20, 25, 30, 40, 50, 60, 80, 100, 120, 160, 200, 240	1	Set	2
		GFU-12-∗∗∗-S15W				
		GFP-12-∗∗∗-S15	5, 7.5, 10, 15, 20, 25, 30, 40, 50, 60, 80, 100, 120, 160, 200, 240	1	Sold Separately	2
		GFP-12-∗∗∗-S15W				
	25 W	GFU-12-∗∗∗-S25	5, 7.5, 10, 15, 20, 25, 30, 40, 50, 60, 80, 100, 120	1	Set	2
		GFU-12-∗∗∗-S25W				
		GFP-12-∗∗∗-S25	5, 7.5, 10, 15, 20, 25, 30, 40, 50, 60, 80, 100, 120	1	Sold Separately	2
		GFP-12-∗∗∗-S25W				

Note: A reduction ratio will be indicated as ∗∗∗ in the nomenclature.
Note: Please refer to page 174 for the performance table.

G Type Parallel Shaft | Shaft Diameter 15 | Flange Mounting

<Figure 2>

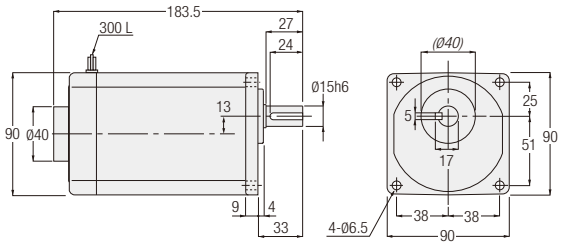

<Figure 3>

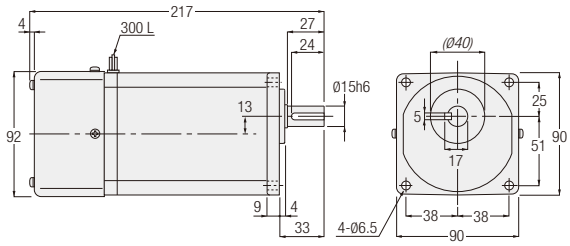

Note: The italic dimension indicates areas with remaining casting surface. Please add 0.5 mm or more to the italic dimension for the diameter of the mating hole.

Number of Phases	Power	Part Number	Reduction Ratio	Figure Number	Controller	Approx. Weight (kg)
1-Phase	25 W	GFU-15-∗∗∗-S25	160, 200, 240	2	Set	3
		GFU-15-∗∗∗-S25W				
		GFP-15-∗∗∗-S25	160, 200, 240	2	Sold Separately	3
		GFP-15-∗∗∗-S25W				
	40 W	GFU-15-∗∗∗-S40	5, 7.5, 10, 15, 20, 25, 30, 40, 50, 60, 80, 100, 120	2	Set	3
		GFU-15-∗∗∗-S40W				
		GFP-15-∗∗∗-S40	5, 7.5, 10, 15, 20, 25, 30, 40, 50, 60, 80, 100, 120	2	Sold Separately	3
		GFP-15-∗∗∗-S40W				
	60 W	GFU-15-∗∗∗-S60	5, 7.5, 10, 15, 20, 25, 30, 40, 50, 60	3	Set	3
		GFU-15-∗∗∗-S60W				
		GFP-15-∗∗∗-S60	5, 7.5, 10, 15, 20, 25, 30, 40, 50, 60	3	Sold Separately	3
		GFP-15-∗∗∗-S60W				
	90 W	GFU-15-∗∗∗-S90	5, 7.5, 10, 15, 20, 25, 30	3	Set	3
		GFU-15-∗∗∗-S90W				
		GFP-15-∗∗∗-S90	5, 7.5, 10, 15, 20, 25, 30	3	Sold Separately	3
		GFP-15-∗∗∗-S90W				

Note: A reduction ratio will be indicated as ∗∗∗ in the nomenclature.
Note: Please refer to page 174 for the performance table.

G Type Parallel Shaft | Shaft Diameter **18** | **Flange** Mounting

<Figure 1>

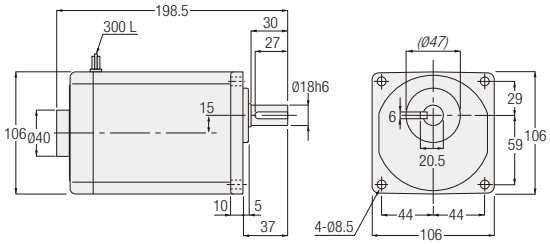

<Figure 2>

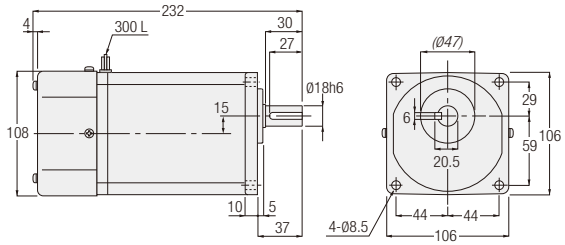

Note: The italic dimension indicates areas with remaining casting surface. Please add 0.5 mm or more to the italic dimension for the diameter of the mating hole.

Number of Phases	Power	Part Number	Reduction Ratio	Figure Number	Controller	Approx. Weight (kg)
1-Phase	40 W	GFU-18-∗∗∗-S40	160, 200, 240	1	Set	4
		GFU-18-∗∗∗-S40W				
		GFP-18-∗∗∗-S40	160, 200, 240	1	Sold Separately	4
		GFP-18-∗∗∗-S40W				
	60 W	GFU-18-∗∗∗-S60	80, 100, 120, 160, 200, 240	2	Set	4
		GFU-18-∗∗∗-S60W				
		GFP-18-∗∗∗-S60	80, 100, 120, 160, 200, 240	2	Sold Separately	4
		GFP-18-∗∗∗-S60W				
	90 W	GFU-18-∗∗∗-S90	40, 50, 60, 80, 100, 120, 160, 200, 240	2	Set	4
		GFU-18-∗∗∗-S90W				
		GFP-18-∗∗∗-S90	40, 50, 60, 80, 100, 120, 160, 200, 240	2	Sold Separately	4
		GFP-18-∗∗∗-S90W				

Note: A reduction ratio will be indicated as ∗∗∗ in the nomenclature.
Note: Please refer to page 175 for the performance table.

G Type Parallel Shaft | Shaft Diameter **22** | **Flange** Mounting

<Figure 3>

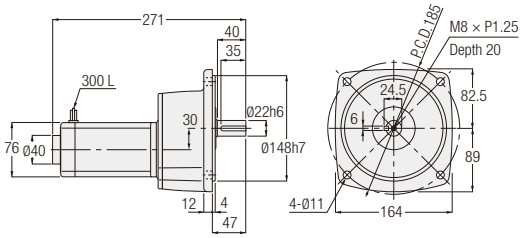

Number of Phases	Power	Part Number	Reduction Ratio	Figure Number	Controller	Approx. Weight (kg)
1-Phase	15 W	GFU-22-∗∗∗-S15	300, 375, 450, 600, 750, 900, 1200, 1500, 1800	3	Set	5
		GFU-22-∗∗∗-S15W				
		GFP-22-∗∗∗-S15	300, 375, 450, 600, 750, 900, 1200, 1500, 1800	3	Sold Separately	5
		GFP-22-∗∗∗-S15W				
	25 W	GFU-22-∗∗∗-S25	300, 375, 450, 600, 750, 900	3	Set	5
		GFU-22-∗∗∗-S25W				
		GFP-22-∗∗∗-S25	300, 375, 450, 600, 750, 900	3	Sold Separately	5
		GFP-22-∗∗∗-S25W				

Note: A reduction ratio will be indicated as ∗∗∗ in the nomenclature.
Note: Please refer to page 174 for the performance table.

G Type Parallel Shaft | Shaft Diameter 28 | Flange Mounting

<Figure 1>

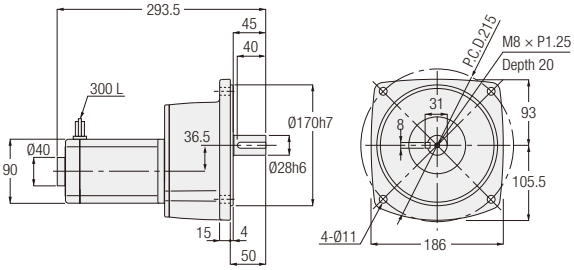

<Figure 2>

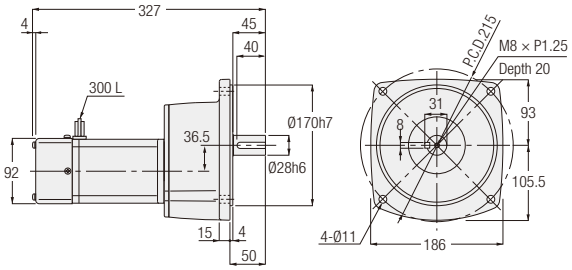

Number of Phases	Power	Part Number	Reduction Ratio	Figure Number	Controller	Approx. Weight (kg)
1-Phase	25 W	GFU-28-∗∗∗-S25	1200, 1500, 1800	1	Set	7
		GFU-28-∗∗∗-S25W				
		GFP-28-∗∗∗-S25	1200, 1500, 1800	1	Sold Separately	7
		GFP-28-∗∗∗-S25W				
	40 W	GFU-28-∗∗∗-S40	300, 375, 450, 600, 750, 900	1	Set	7
		GFU-28-∗∗∗-S40W				
		GFP-28-∗∗∗-S40	300, 375, 450, 600, 750, 900	1	Sold Separately	7
		GFP-28-∗∗∗-S40W				
	60 W	GFU-28-∗∗∗-S60	300, 375, 450, 600, 750, 900	2	Set	7
		GFU-28-∗∗∗-S60W				
		GFP-28-∗∗∗-S60	300, 375, 450, 600, 750, 900	2	Sold Separately	7
		GFP-28-∗∗∗-S60W				
	90 W	GFU-28-∗∗∗-S90	300, 375, 450	2	Set	7
		GFU-28-∗∗∗-S90W				
		GFP-28-∗∗∗-S90	300, 375, 450	2	Sold Separately	7
		GFP-28-∗∗∗-S90W				

Note: A reduction ratio will be indicated as ∗∗∗ in the nomenclature.
Note: Please refer to page 174 for the performance table.

G Type Parallel Shaft | Shaft Diameter 32 | Flange Mounting

<Figure 3>

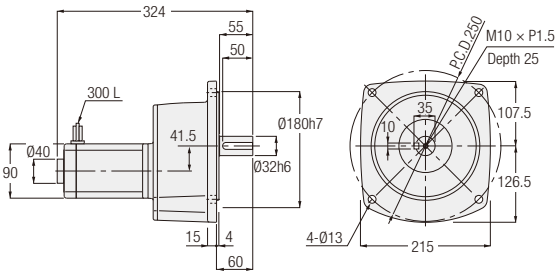

<Figure 4>

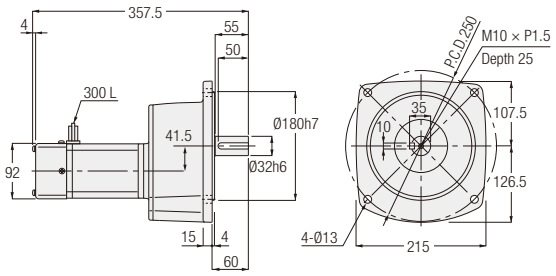

Number of Phases	Power	Part Number	Reduction Ratio	Figure Number	Controller	Approx. Weight (kg)
1-Phase	40 W	GFU-32-∗∗∗-S40	1200, 1500, 1800	3	Set	11
		GFU-32-∗∗∗-S40W				
		GFP-32-∗∗∗-S40	1200, 1500, 1800	3	Sold Separately	11
		GFP-32-∗∗∗-S40W				
	60 W	GFU-32-∗∗∗-S60	1200, 1500, 1800	4	Set	11
		GFU-32-∗∗∗-S60W				
		GFP-32-∗∗∗-S60	1200, 1500, 1800	4	Sold Separately	11
		GFP-32-∗∗∗-S60W				
	90 W	GFU-32-∗∗∗-S90	600, 750, 900	4	Set	11
		GFU-32-∗∗∗-S90W				
		GFP-32-∗∗∗-S90	600, 750, 900	4	Sold Separately	11
		GFP-32-∗∗∗-S90W				

Note: A reduction ratio will be indicated as ∗∗∗ in the nomenclature.
Note: Please refer to page 175 for the performance table.

G Type Parallel Shaft | Shaft Diameter 40 | Flange Mounting

<Figure 1>

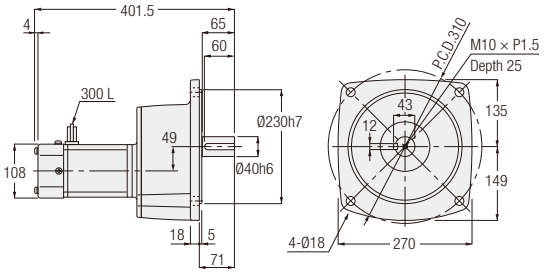

Number of Phases	Power	Part Number	Reduction Ratio	Figure Number	Controller	Approx. Weight (kg)
1-Phase	90 W	GFU-40-∗∗∗-S90	1200, 1500, 1800	1	Set	15
		GFU-40-∗∗∗-S90W				
		GFP-40-∗∗∗-S90	1200, 1500, 1800	1	Sold Separately	15
		GFP-40-∗∗∗-S90W				

Note: A reduction ratio will be indicated as ∗∗∗ in the nomenclature.
Note: Please refer to page 176 for the performance table.

G Type Parallel Shaft | Shaft Diameter 22 | Small Flange Mounting

<Figure 2>

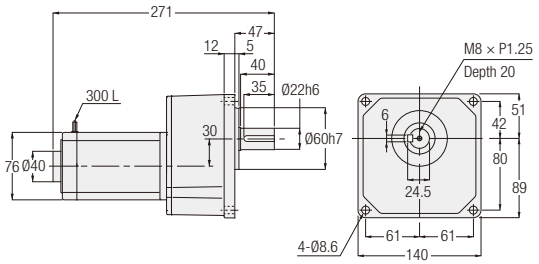

Number of Phases	Power	Part Number	Reduction Ratio	Figure Number	Controller	Approx. Weight (kg)
1-Phase	15 W	GKU-22-∗∗∗-S15	300, 375, 450, 600, 750, 900, 1200, 1500, 1800	2	Set	5
		GKU-22-∗∗∗-S15W				
		GKP-22-∗∗∗-S15	300, 375, 450, 600, 750, 900, 1200, 1500, 1800	2	Sold Separately	5
		GKP-22-∗∗∗-S15W				
	25 W	GKU-22-∗∗∗-S25	300, 375, 450, 600, 750, 900	2	Set	5
		GKU-22-∗∗∗-S25W				
		GKP-22-∗∗∗-S25	300, 375, 450, 600, 750, 900	2	Sold Separately	5
		GKP-22-∗∗∗-S25W				

Note: A reduction ratio will be indicated as ∗∗∗ in the nomenclature.
Note: Please refer to page 174 for the performance table.

G Type Parallel Shaft | Shaft Diameter 28 | Small Flange Mounting

<Figure 1>

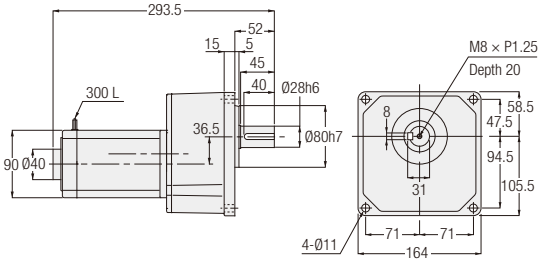

<Figure 2>

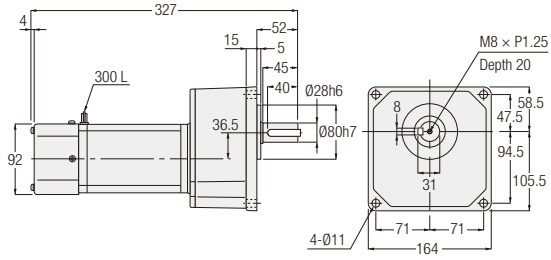

Number of Phases	Power	Part Number	Reduction Ratio	Figure Number	Controller	Approx. Weight (kg)
1-Phase	25 W	GKU-28-∗∗∗-S25	1200, 1500, 1800	1	Set	7
		GKU-28-∗∗∗-S25W				
		GKP-28-∗∗∗-S25	1200, 1500, 1800	1	Sold Separately	7
		GKP-28-∗∗∗-S25W				
	40 W	GKU-28-∗∗∗-S40	300, 375, 450, 600, 750, 900	1	Set	7
		GKU-28-∗∗∗-S40W				
		GKP-28-∗∗∗-S40	300, 375, 450, 600, 750, 900	1	Sold Separately	7
		GKP-28-∗∗∗-S40W				
	60 W	GKU-28-∗∗∗-S60	300, 375, 450, 600, 750, 900	2	Set	7
		GKU-28-∗∗∗-S60W				
		GKP-28-∗∗∗-S60	300, 375, 450, 600, 750, 900	2	Sold Separately	7
		GKP-28-∗∗∗-S60W				
	90 W	GKU-28-∗∗∗-S90	300, 375, 450	2	Set	7
		GKU-28-∗∗∗-S90W				
		GKP-28-∗∗∗-S90	300, 375, 450	2	Sold Separately	7
		GKP-28-∗∗∗-S90W				

Note: A reduction ratio will be indicated as ∗∗∗ in the nomenclature.
Note: Please refer to page 174 for the performance table.

G Type Parallel Shaft | Shaft Diameter 32 | Small Flange Mounting

<Figure 3>

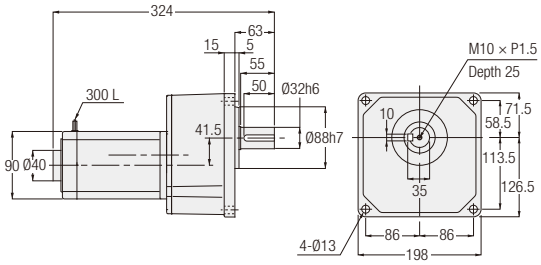

<Figure 4>

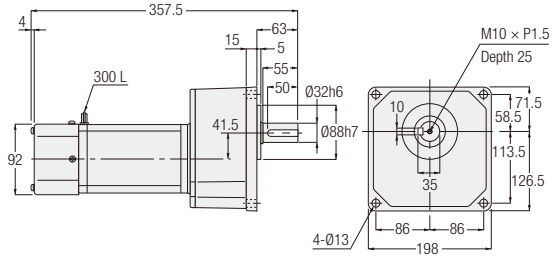

Number of Phases	Power	Part Number	Reduction Ratio	Figure Number	Controller	Approx. Weight (kg)
1-Phase	40 W	GKU-32-∗∗∗-S40	1200, 1500, 1800	3	Set	11
		GKU-32-∗∗∗-S40W				
		GKP-32-∗∗∗-S40	1200, 1500, 1800	3	Sold Separately	11
		GKP-32-∗∗∗-S40W				
	60 W	GKU-32-∗∗∗-S60	1200, 1500, 1800	4	Set	11
		GKU-32-∗∗∗-S60W				
		GKP-32-∗∗∗-S60	1200, 1500, 1800	4	Sold Separately	11
		GKP-32-∗∗∗-S60W				
	90 W	GKU-32-∗∗∗-S90	600, 750, 900	4	Set	11
		GKU-32-∗∗∗-S90W				
		GKP-32-∗∗∗-S90	600, 750, 900	4	Sold Separately	11
		GKP-32-∗∗∗-S90W				

Note: A reduction ratio will be indicated as ∗∗∗ in the nomenclature.
Note: Please refer to page 175 for the performance table.

MEMO

5. Gearboxes (Double Shaft Type)

5-1. Performance Table

G3 Type Gearboxes (Double Shaft Type)

[Notes]

- Allowable output shaft O.H.L. is the value at the middle of the output shaft.
- For the rotational direction of the output shaft, please refer to the figure shown below.
- The "*" mark indicates a limited torque type. Please make sure to check the allowable output shaft torque in the performance table.
- The motor power class value is the value when a 4 pole motor is used.

■ Rotational Direction Relationship

The rotational direction shown below with arrow illustrates the rotation relationship between the output shaft / input shaft and is no way illustrating limitations in rotational direction.

Power	Reduction Ratio
0.1 kW	1/5 to 1/50 and 1/300 to 1/1200
0.2 kW, 0.4 kW	1/5 to 1/30 and 1/300 to 1/1200
0.75 kW	1/5 to 1/30 and 1/300 to 1/450
1.5 kW, 2.2 kW	1/5 to 1/30

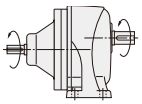

The input and output shafts rotate in the same direction.

Power	Reduction Ratio
0.1 kW	1/60 to 1/200
0.2 kW, 0.4 kW	1/40 to 1/200
0.75 kW, 1.5 kW	1/40 to 1/200
2.2 kW	1/40 to 1/100

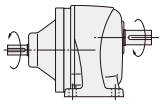

The input and output shafts rotate in the opposite directions.

4 Poles Motor Power Class	Frame Size	Reduction Ratio	Actual Reduction Ratio	Allowable Output Shaft Torque Input (1500 r/min)	Allowable O.H.L. N		Drawings		
				N·m	Input Shaft	Output Shaft	Foot Mount	Flange Mount	Small Flange Mount
0.1 kW	18	1/5	33/164	3	176	770	P.191	P.195	P.198
		1/10	77/779	6.1		1140			
		1/15	119/1804	9.1		1270			
		1/20	49/984	12		1530			
		1/25	28/697	15		1650			
		1/30	35/1066	19		1780			
		1/40	35/1404	24		1910			
		1/50	7/351	29		2040			
	22	1/60	11/684	35	176	2800	P.191	P.195	P.198
		1/80	21/1634	47		3180			
		1/100	7/684	59		3180			
		1/120	147/17974	71		3180			
		1/160	21/3268	94		3180			
		1/200	21/4085	117		3180			
	28	1/300	221/65190	157	176	3430	P.192	P.196	P.199
		1/375	187/68370	196		3430			
		1/450	1183/521520	235		3430			
	32	1/600	147/88192	313	176	5880	P.192	P.196	P.199
		1/750	49/36464	391		5880			
		* 1/900	62/57063	431		5880			
		* 1/1200	46/55195	431		5880			
0.2 kW	18	1/5	33/164	6.1	196	770	P.191	P.195	P.198
		1/10	77/779	11.8		1140			
		1/15	119/1804	18.6		1270			
		1/20	49/984	24.5		1450			
		1/25	28/697	30.4		1550			
	22	1/30	7/216	36.3	196	2280	P.191	P.195	P.198
		1/40	91/3600	47		2410			
		1/50	11/540	58.8		2540			
		1/60	637/39600	70.6		2800			
		1/80	91/7200	94.1		3000			
		* 1/100	11/1080	97		3180			
	28	1/100	13/1353	117	196	3690	P.192	P.196	P.199
		1/120	91/11000	140		4320			
		1/160	1/165	187		4450			
		1/200	7/1375	234		4450			
	32	1/300	91/27348	313	196	5880	P.192	P.196	P.199
		1/375	77/28620	391		5880			
		1/450	91/41022	431		5880			
	40	1/600	9/5300	626	196	7060	P.193	P.197	-
		* 1/750	62/46427	764		7060			
		* 1/900	23/21259	764		7060			
		* 1/1200	9/10600	764		7060			

5-1. Performance Table

4 Poles Motor Power Class	Frame Size	Reduction Ratio	Actual Reduction Ratio	Allowable Output Shaft Torque Input (1500 r/min)	Allowable O.H.L.		Drawings		
					N		Foot Mount	Flange Mount	Small Flange Mount
				N·m	Input Shaft	Output Shaft			
0.4 kW	22	1/5	7/34	12	245	1140	P.191	P.195	P.198
		1/10	7/68	25		1530			
		1/15	49/748	36		1780			
		1/20	7/136	48		1910			
		1/25	7/170	61		2050			
	28	1/30	1/30	73	245	3310	P.192	P.196	P.199
		1/40	221/8610	94		3690			
		1/50	187/9030	117		4080			
		1/60	169/9840	140		4450			
		1/80	65/5166	187		4450			
		* 1/100	55/5418	193		4450			
	32	1/100	7/688	234	245	6370	P.192	P.196	P.199
		1/120	77/9360	281		7640			
		1/160	21/3328	374		7640			
		1/200	189/38272	431		7640			
	40	1/300	7/2160	626	245	7060	P.193	P.197	-
		* 1/375	77/29328	764		7060			
		* 1/450	49/21600	764		7060			
	50	* 1/600	57/35360	1225	245	9800	P.193	P.197	-
		* 1/750	25/19448	1225		9800			
		* 1/900	5/4338	1225		9800			
		* 1/1200	33/40664	1225		9800			
0.75 kW	28	1/5	91/459	23	294	1650	P.192	P.196	P.199
		1/10	1/10	45		2280			
		1/15	91/1360	68		2800			
		1/20	5/102	91		3050			
		1/25	7/170	114		3180			
	32	1/30	3/92	136	294	5220	P.192	P.196	P.199
		1/40	13/516	175		5470			
		1/50	11/540	220		5780			
		1/60	13/774	264		6080			
		1/80	13/1032	351		6180			
		* 1/100	11/1080	362		6770			
	40	1/100	91/9000	439	294	9170	P.193	P.197	-
		1/120	77/9400	527		9170			
		1/160	9/1400	703		9170			
		1/200	9/1750	764		9170			
	50	1/300	211/62013	1176	294	9800	P.193	P.197	
		* 1/375	94/36103	1225		9800			
		* 1/450	65/29167	1225		9800			
1.5 kW	32	1/5	1/5	45	343	2280	P.192	P.196	P.199
		1/10	1/10	91		3180			
		1/15	1/15	136		3690			
		1/20	1/20	181		4190			
		1/25	9/230	226		4410			
	40	1/30	1/30	272	343	6600	P.193	P.197	-
		1/40	13/540	351		6960			
		1/50	11/564	439		6960			
		1/60	91/5400	527		7210			
		1/80	13/1080	703		7400			
		* 1/100	11/1128	724		7400			
	50	1/100	25/2618	878	343	12500	P.193	P.197	-
		1/120	77/8993	1060		12500			
		* 1/160	33/5474	1230		12500			
		* 1/200	30/5831	1230		12500			
2.2 kW	40	1/5	7/36	66	392	2800	P.193	P.197	-
		1/10	7/72	131		4080			
		1/15	49/720	197		4580			
		1/20	7/144	264		5220			
		1/25	7/180	329		6110			
	50	1/30	5/154	395	392	9040	P.193	P.197	
		1/40	399/15488	499		9420			
		1/50	399/20240	623		10000			
		1/60	49/2904	748		10000			
		1/80	49/3795	1000		10100			
		* 1/100	21/2116	1230		10100			

GA Type Gearboxes (Double Shaft Type)

[Notes]

- Allowable output shaft O.H.L. is the value at the middle of the output shaft.
- For the rotational direction of the output shaft, please refer to the figure shown below.
- The "*" mark indicates a limited torque type. Please make sure to check the allowable output shaft torque in the performance table.
- The motor power class value is the value when a 4 pole motor is used.

■ Rotational Direction Relationship

The rotational direction shown below with arrow illustrates the rotation relationship between the output shaft / input shaft and is no way illustrating limitations in rotational direction.

Power	Reduction Ratio
0.4 kW	1/600 to 1/1200
0.75 kW	1/300 to 1/450
1.5 kW, 2.2 kW	1/30

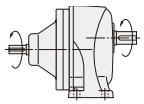

The input and output shafts rotate in the same direction.

Power	Reduction Ratio
2.2 kW	1/40 to 1/100

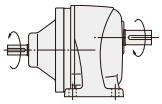

The input and output shafts rotate in the opposite directions.

4 Poles Motor Power Class	Frame Size	Reduction Ratio	Actual Reduction Ratio	Allowable Output Shaft Torque Input (1500 r/min)	Allowable O.H.L.		Drawings		
					N		Foot Mount	Flange Mount	Small Flange Mount
				N·m	Input Shaft	Output Shaft			
0.4 kW	50	* 1/600	57/35360	1225	245	9800	P.194	-	-
		* 1/750	25/19448	1225		9800			
		* 1/900	5/4338	1225		9800			
		* 1/1200	33/40664	1225		9800			
0.75 kW	50	1/300	211/62013	1176	294	9800	P.194	-	
		* 1/375	94/36103	1225		9800			
		* 1/450	65/29167	1225		9800			
1.5 kW	50	1/100	25/2618	878	343	12500	P.194	-	-
		1/120	77/8993	1060		12500			
		* 1/160	33/5474	1230		12500			
		* 1/200	30/5831	1230		12500			
2.2 kW	50	1/30	5/154	395	392	9040	P.194	-	
		1/40	399/15488	499		9420			
		1/50	399/20240	623		10000			
		1/60	49/2904	748		10000			
		1/80	49/3795	1000		10100			
		* 1/100	21/2116	1230		10100			

5-2. Drawings

G3 Type Parallel Shaft | Shaft Diameter 18 | **Foot** Mounting

<Figure 1>

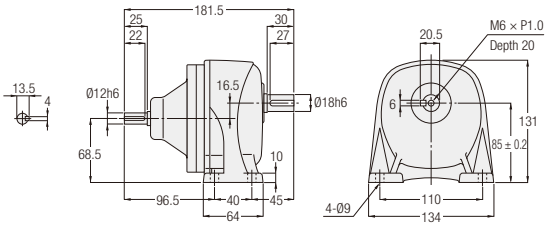

Power Class	Part Number	Reduction Ratio	Figure Number	Approx. Weight (kg)
0.1 kW	G3L-18-∗∗∗-010	5, 10, 15, 20, 25, 30, 40, 50	1	2.5
0.2 kW	G3L-18-∗∗∗-020	5, 10, 15, 20, 25	1	2.5

Note: A reduction ratio will be indicated as ∗∗∗ in the nomenclature.
Note: Please refer to page 188 for the performance table.

G3 Type Parallel Shaft | Shaft Diameter 22 | **Foot** Mounting

<Figure 2>

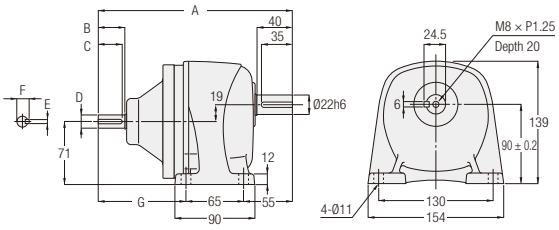

Power Class	Part Number	Reduction Ratio	Figure Number	Approx. Weight (kg)	A	B	C	D	E	F	G
0.1 kW	G3L-22-∗∗∗-010	60, 80, 100, 120, 160, 200	2	3.5	207.5	25	22	Ø12h6	4	13.5	87.5
0.2 kW	G3L-22-∗∗∗-020	30, 40, 50, 60, 80, 100	2	3.5	207.5	25	22	Ø12h6	4	13.5	87.5
0.4 kW	G3L-22-∗∗∗-040	5, 10, 15, 20, 25	2	4	219	30	27	Ø15h6	5	17	99

Note: A reduction ratio will be indicated as ∗∗∗ in the nomenclature.
Note: Please refer to page 188 for the performance table.

G3 Type Parallel Shaft | Shaft Diameter 28 | Foot Mounting

<Figure 1>

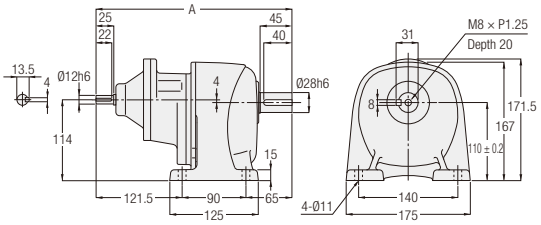

<Figure 2>

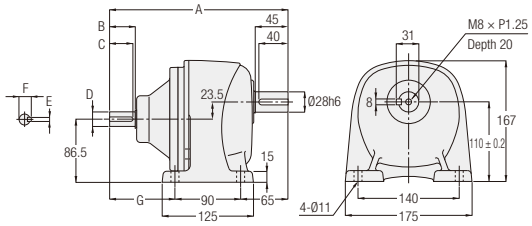

Power Class	Part Number	Reduction Ratio	Figure Number	Approx. Weight (kg)	A	B	C	D	E	F	G
0.1 kW	G3L-28-∗∗∗-010	300, 375, 450	1	6.5	276.5	-	-	-	-	-	-
0.2 kW	G3L-28-∗∗∗-020	100, 120, 160, 200	2	5.5	220.5	25	22	Ø12h6	4	13.5	65.5
0.4 kW	G3L-28-∗∗∗-040	30, 40, 50, 60, 80, 100	2	6	235	30	27	Ø15h6	5	17	80
0.75 kW	G3L-28-∗∗∗-075	5, 10, 15, 20, 25	2	6	244.5	35	32	Ø20h6	6	22.5	89.5

Note: A reduction ratio will be indicated as ∗∗∗ in the nomenclature.
Note: Please refer to page 188 for the performance table.

G3 Type Parallel Shaft | Shaft Diameter 32 | Foot Mounting

<Figure 3>

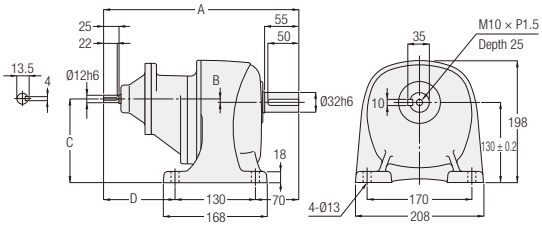

<Figure 4>

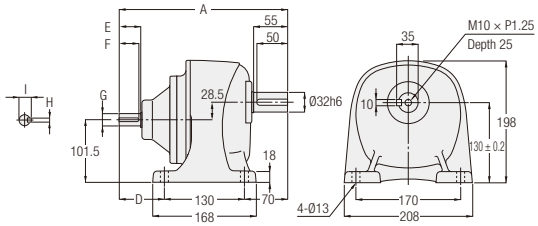

Power Class	Part Number	Reduction Ratio	Figure Number	Approx. Weight (kg)	A	B	C	D	E	F	G	H	I
0.1 kW	G3L-32-∗∗∗-010	600, 750, 900, 1200	3	9.5	295.5	-1	129	95.5	-	-	-	-	-
0.2 kW	G3L-32-∗∗∗-020	300, 375, 450	3	9.5	315.5	5.5	135.5	115.5	-	-	-	-	-
0.4 kW	G3L-32-∗∗∗-040	100, 120, 160, 200	4	9	254	-	-	54	30	27	Ø15h6	5	17
0.75 kW	G3L-32-∗∗∗-075	30, 40, 50, 60, 80, 100	4	9.5	273.5	-	-	73.5	35	32	Ø20h6	6	22.5
1.5 kW	G3L-32-∗∗∗-150	5, 10, 15, 20, 25	4	10	297	-	-	97	40	35	Ø25h6	8	28

Note: A reduction ratio will be indicated as ∗∗∗ in the nomenclature.
Note: Please refer to page 188 for the performance table.

G3 Type Parallel Shaft | Shaft Diameter 40 | Foot Mounting

<Figure 1>

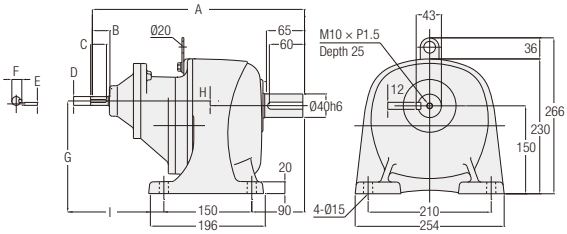

<Figure 2>

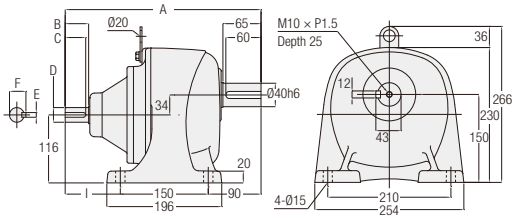

Note: Gearmotors with a motor power of 0.2 kW or 0.75 kW does not include the hanging plate.

Power Class	Part Number	Reduction Ratio	Figure Number	Approx. Weight (kg)	A	B	C	D	E	F	G	H	I
0.2 kW	G3L-40-∗∗∗-020	600, 750, 900, 1200	1	16	337.5	25	22	Ø12h6	4	13.5	150	0	97.5
0.4 kW	G3L-40-∗∗∗-040	300, 375, 450	1	17.5	362	30	27	Ø15h6	5	17	158	8	122
0.75 kW	G3L-40-∗∗∗-075	100, 120, 160, 200	2	16	295.5	35	32	Ø20h6	6	22.5	-	-	55.5
1.5 kW	G3L-40-∗∗∗-150	30, 40, 50, 60, 80, 100	2	17	334	40	35	Ø25h6	8	28	-	-	94
2.2 kW	G3L-40-∗∗∗-220	5, 10, 15, 20, 25	2	16.5	330	45	40	Ø30h6	8	33	-	-	90

Note: A reduction ratio will be indicated as ∗∗∗ in the nomenclature.
Note: Please refer to page 188 for the performance table.

G3 Type Parallel Shaft | Shaft Diameter 50 | Foot Mounting

<Figure 3>

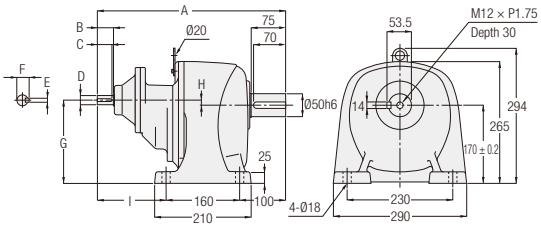

<Figure 4>

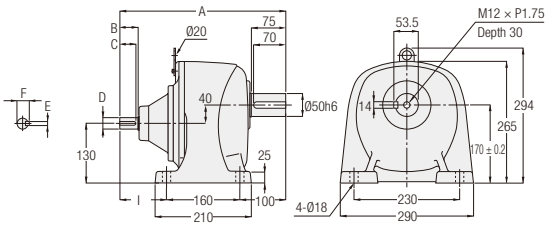

Power Class	Part Number	Reduction Ratio	Figure Number	Approx. Weight (kg)	A	B	C	D	E	F	G	H	I
0.4 kW	G3L-50-∗∗∗-040	600, 750, 900, 1200	3	47	390	30	27	Ø15h6	5	17	172	2	130
0.75 kW	G3L-50-∗∗∗-075	300, 375, 450	3	47.5	409.5	35	32	Ø20h6	6	22.5	181	11	149.5
1.5 kW	G3L-50-∗∗∗-150	100, 120, 160, 200	4	46.5	362	40	35	Ø25h6	8	28	-	-	102
2.2 kW	G3L-50-∗∗∗-220	30, 40, 50, 60, 80, 100	4	46.5	374	45	40	Ø30h6	8	33	-	-	114

Note: A reduction ratio will be indicated as ∗∗∗ in the nomenclature.
Note: Please refer to page 189 for the performance table.

GA Type Parallel Shaft | Shaft Diameter 50 | Foot Mounting

<Figure 1>

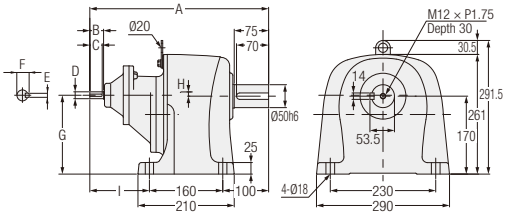

<Figure 2>

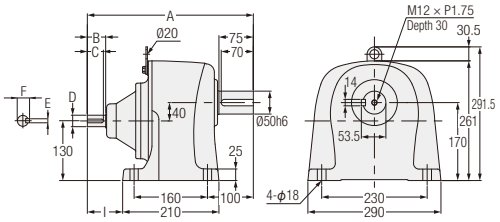

Power Class	Part Number	Reduction Ratio	Figure Number	Approx. Weight (kg)	A	B	C	D	E	F	G	H	I
0.4 kW	GAL-50-∗∗∗-040	600, 750, 900, 1200	1	27.5	390	30	27	Ø15h6	5	17	172	2	130
0.75 kW	GAL-50-∗∗∗-075	300, 375, 450	1	28	409.5	35	32	Ø20h6	6	22.5	181	11	149.5
1.5 kW	GAL-50-∗∗∗-150	100, 120, 160, 200	2	27	362	40	35	Ø25h6	8	28	-	-	102
2.2 kW	GAL-50-∗∗∗-220	30, 40, 50, 60, 80, 100	2	27	374	45	40	Ø30h6	8	33	-	-	114

Note: A reduction ratio will be indicated as ∗∗∗ in the nomenclature.
Note: Please refer to page 190 for the performance table.

G3 Type Parallel Shaft | Shaft Diameter **18** | **Flange** Mounting

<Figure 1>

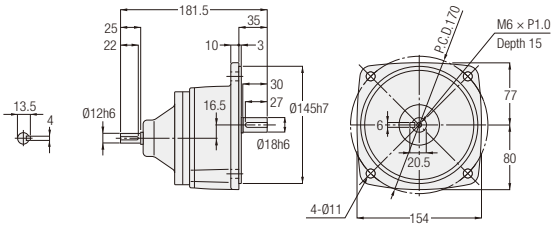

Power Class	Part Number	Reduction Ratio	Figure Number	Approx. Weight (kg)
0.1 kW	G3F-18-∗∗∗-010	5, 10, 15, 20, 25, 30, 40, 50	1	3
0.2 kW	G3F-18-∗∗∗-020	5, 10, 15, 20, 25	1	3

Note: A reduction ratio will be indicated as ∗∗∗ in the nomenclature.
Note: Please refer to page 188 for the performance table.

G Type Parallel Shaft | Shaft Diameter **22** | **Flange** Mounting

<Figure 2>

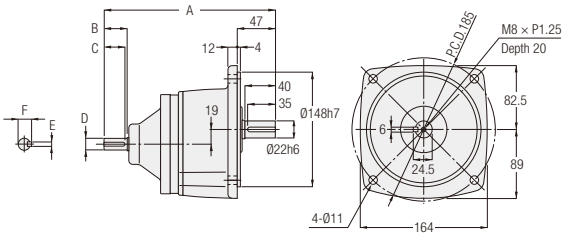

Power Class	Part Number	Reduction Ratio	Figure Number	Approx. Weight (kg)	A	B	C	D	E	F
0.1 kW	G3F-22-∗∗∗-010	60, 80, 100, 120, 160, 200	2	4	207.5	25	22	Ø12h6	4	13.5
0.2 kW	G3F-22-∗∗∗-020	30, 40, 50, 60, 80, 100	2	4	207.5	25	22	Ø12h6	4	13.5
0.4 kW	G3F-22-∗∗∗-040	5, 10, 15, 20, 25	2	4.5	219	30	27	Ø15h6	5	17

Note: A reduction ratio will be indicated as ∗∗∗ in the nomenclature.
Note: Please refer to page 188 for the performance table.

G3 Type Parallel Shaft | Shaft Diameter 28 | Flange Mounting

<Figure 1>

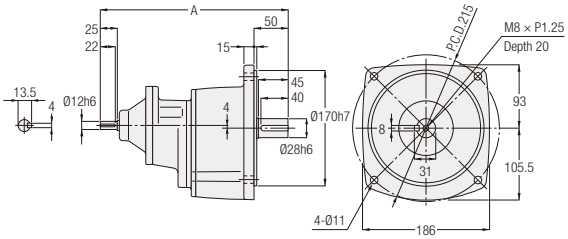

<Figure 2>

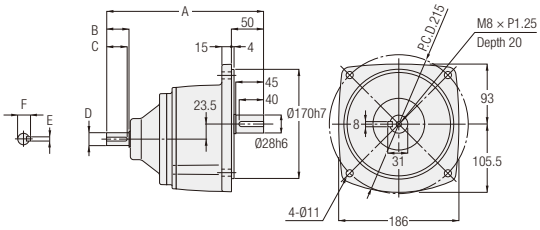

Power Class	Part Number	Reduction Ratio	Figure Number	Approx. Weight (kg)	A	B	C	D	E	F
0.1 kW	G3F-28-∗∗∗-010	300, 375, 450	1	7	276.5	-	-	-	-	-
0.2 kW	G3F-28-∗∗∗-020	100, 120, 160, 200	2	6	220.5	25	22	Ø12h6	4	13.5
0.4 kW	G3F-28-∗∗∗-040	30, 40, 50, 60, 80, 100	2	6.5	235	30	27	Ø15h6	5	17
0.75 kW	G3F-28-∗∗∗-075	5, 10, 15, 20, 25	2	6.5	244.5	35	32	Ø20h6	6	22.5

Note: A reduction ratio will be indicated as ∗∗∗ in the nomenclature.
Note: Please refer to page 188 for the performance table.

G3 Type Parallel Shaft | Shaft Diameter 32 | Flange Mounting

<Figure 3>

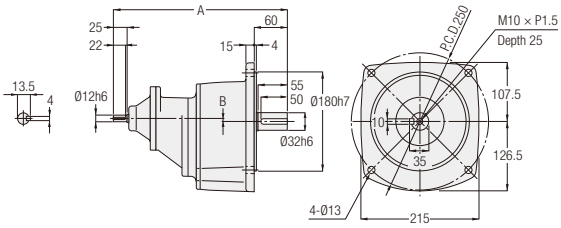

<Figure 4>

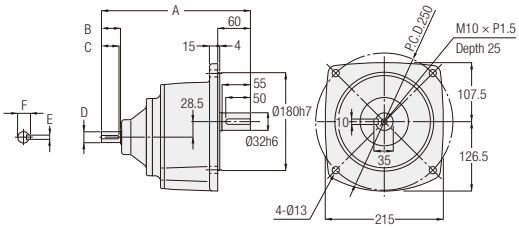

Power Class	Part Number	Reduction Ratio	Figure Number	Approx. Weight (kg)	A	B	C	D	E	F
0.1 kW	G3F-32-∗∗∗-010	600, 750, 900, 1200	3	10	295.5	-1	-	-	-	-
0.2 kW	G3F-32-∗∗∗-020	300, 375, 450	3	10	315.5	5.5	-	-	-	-
0.4 kW	G3F-32-∗∗∗-040	100, 120, 160, 200	4	9.5	254	30	27	Ø15h6	5	17
0.75 kW	G3F-32-∗∗∗-075	30, 40, 50, 60, 80, 100	4	10	273.5	35	32	Ø20h6	6	22.5
1.5 kW	G3F-32-∗∗∗-150	5, 10, 15, 20, 25	4	10.5	297	40	35	Ø25h6	8	28

Note: A reduction ratio will be indicated as ∗∗∗ in the nomenclature.
Note: Please refer to page 188 for the performance table.

G3 Type Parallel Shaft | Shaft Diameter 40 | Flange Mounting

<Figure 1>

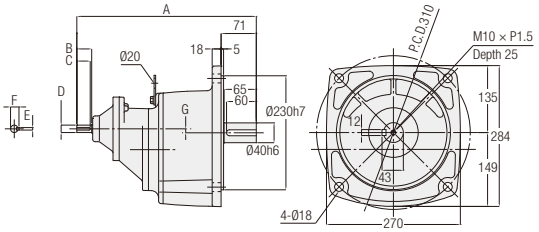

<Figure 2>

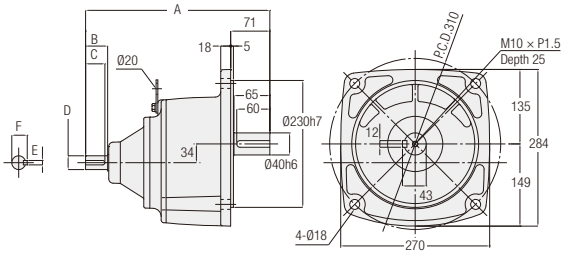

Note: Gearmotors with a motor power of 0.2 kW or 0.75 kW does not include the hanging plate.

Power Class	Part Number	Reduction Ratio	Figure Number	Approx. Weight (kg)	A	B	C	D	E	F	G
0.2 kW	G3F-40-∗∗∗-020	600, 750, 900, 1200	1	17.5	337.5	25	22	Ø12h6	4	13.5	0
0.4 kW	G3F-40-∗∗∗-040	300, 375, 450	1	19	362	30	27	Ø15h6	5	17	8
0.75 kW	G3F-40-∗∗∗-075	100, 120, 160, 200	2	17.5	295.5	35	32	Ø20h6	6	22.5	-
1.5 kW	G3F-40-∗∗∗-150	30, 40, 50, 60, 80, 100	2	18.5	334	40	35	Ø25h6	8	28	-
2.2 kW	G3F-40-∗∗∗-220	5, 10, 15, 20, 25	2	18	330	45	40	Ø30h6	8	33	-

Note: A reduction ratio will be indicated as ∗∗∗ in the nomenclature.
Note: Please refer to page 188 for the performance table.

G Type Parallel Shaft | Shaft Diameter 50 | Flange Mounting

<Figure 3>

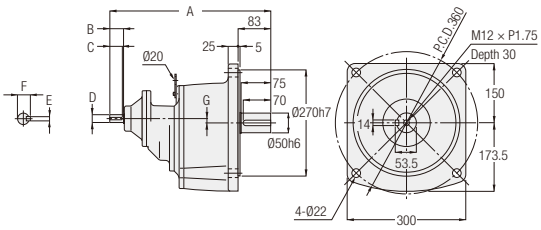

<Figure 4>

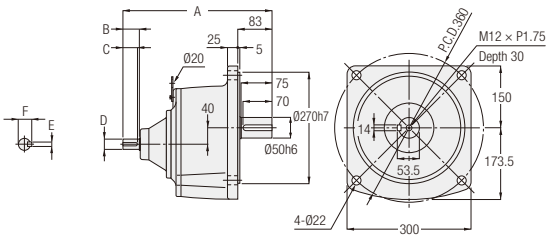

Power Class	Part Number	Reduction Ratio	Figure Number	Approx. Weight (kg)	A	B	C	D	E	F	G
0.4 kW	G3F-50-∗∗∗-040	600, 750, 900, 1200	3	52	390	30	27	Ø15h6	5	17	2
0.75 kW	G3F-50-∗∗∗-075	300, 375, 450	3	52.5	409.5	35	32	Ø20h6	6	22.5	11
1.5 kW	G3F-50-∗∗∗-150	100, 120, 160, 200	4	51.5	362	40	35	Ø25h6	8	28	-
2.2 kW	G3F-50-∗∗∗-220	30, 40, 50, 60, 80, 100	4	51.5	374	45	40	Ø30h6	8	33	-

Note: A reduction ratio will be indicated as ∗∗∗ in the nomenclature.
Note: Please refer to page 189 for the performance table.

G3 Type Parallel Shaft | Shaft Diameter 18 | Small Flange Mounting

<Figure 1>

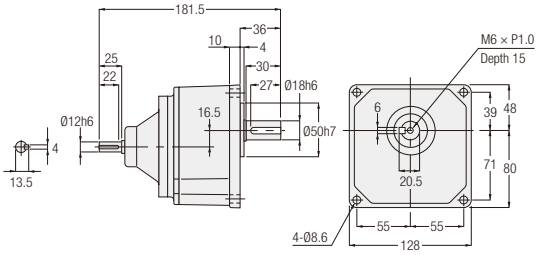

Power Class	Part Number	Reduction Ratio	Figure Number	Approx. Weight (kg)
0.1 kW	G3K-18-∗∗∗-010	5, 10, 15, 20, 25, 30, 40, 50	1	3
0.2 kW	G3K-18-∗∗∗-020	5, 10, 15, 20, 25	1	3

Note: A reduction ratio will be indicated as ∗∗∗ in the nomenclature.
Note: Please refer to page 188 for the performance table.

G3 Type Parallel Shaft | Shaft Diameter 22 | Small Flange Mounting

<Figure 2>

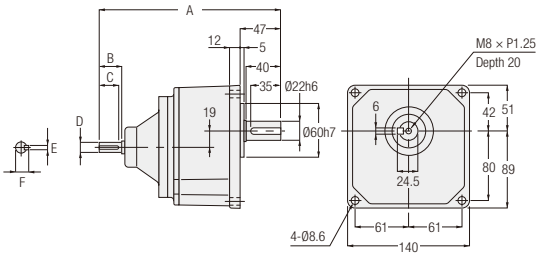

Power Class	Part Number	Reduction Ratio	Figure Number	Approx. Weight (kg)	A	B	C	D	E	F
0.1 kW	G3K-22-∗∗∗-010	60, 80, 100, 120, 160, 200	2	4	207.5	25	22	Ø12h6	4	13.5
0.2 kW	G3K-22-∗∗∗-020	30, 40, 50, 60, 80, 100	2	4	207.5	25	22	Ø12h6	4	13.5
0.4 kW	G3K-22-∗∗∗-040	5, 10, 15, 20, 25	2	4.5	219	30	27	Ø15h6	5	17

Note: A reduction ratio will be indicated as ∗∗∗ in the nomenclature.
Note: Please refer to page 188 for the performance table.

G3 Type Parallel Shaft | Shaft Diameter 28 | Small Flange Mounting

<Figure 1>

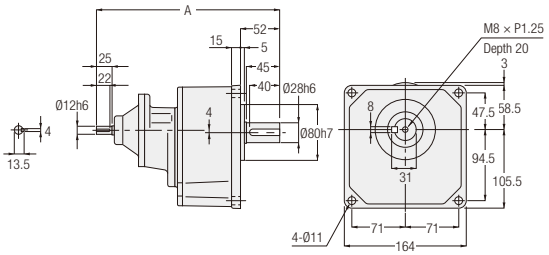

<Figure 2>

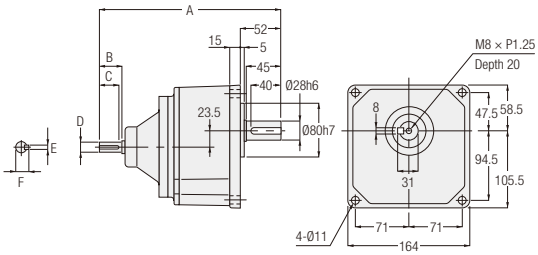

Power Class	Part Number	Reduction Ratio	Figure Number	Approx. Weight (kg)	A	B	C	D	E	F
0.1 kW	G3K-28-∗∗∗-010	300, 375, 450	1	7	276.5	-	-	-	-	-
0.2 kW	G3K-28-∗∗∗-020	100, 120, 160, 200	2	6	220.5	25	22	Ø12h6	4	13.5
0.4 kW	G3K-28-∗∗∗-040	30, 40, 50, 60, 80, 100	2	6.5	235	30	27	Ø15h6	5	17
0.75 kW	G3K-28-∗∗∗-075	5, 10, 15, 20, 25	2	6.5	244.5	35	32	Ø20h6	6	22.5

Note: A reduction ratio will be indicated as ∗∗∗ in the nomenclature.
Note: Please refer to page 188 for the performance table.

G3 Type Parallel Shaft | Shaft Diameter 32 | Small Flange Mounting

<Figure 3>

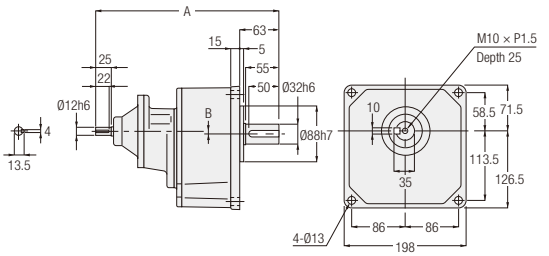

<Figure 4>

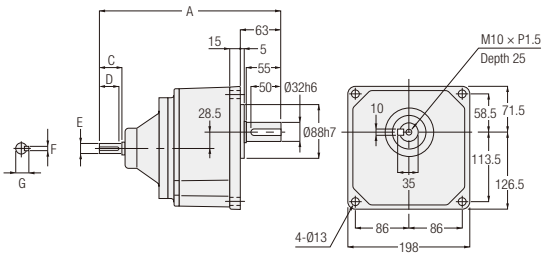

Power Class	Part Number	Reduction Ratio	Figure Number	Approx. Weight (kg)	A	B	C	D	E	F	G
0.1 kW	G3K-32-∗∗∗-010	600, 750, 900, 1200	3	10	295.5	-1	-	-	-	-	-
0.2 kW	G3K-32-∗∗∗-020	300, 375, 450	3	10	315.5	5.5	-	-	-	-	-
0.4 kW	G3K-32-∗∗∗-040	100, 120, 160, 200	4	9.5	254	-	30	27	Ø15h6	5	17
0.75 kW	G3K-32-∗∗∗-075	30, 40, 50, 60, 80, 100	4	10	273.5	-	35	32	Ø20h6	6	22.5
1.5 kW	G3K-32-∗∗∗-150	5, 10, 15, 20, 25	4	10.5	297	-	40	35	Ø25h6	8	28

Note: A reduction ratio will be indicated as ∗∗∗ in the nomenclature.
Note: Please refer to page 188 for the performance table.

6. S-Type Gearboxes (Type That Can Be Equipped with Designated Motor)

6-1. Performance Table

G3 Type S-Type Gearboxes (Type which Can be Equipped with Designated Motor)

[Notes]
- The motor power class value is the value when a 4 pole motor is used.
- When using an output shaft for a motor other than a 4 pole motor, the value obtained by multiplying the torque by the torque correction coefficient shown on page 626 shall be the allowable output shaft torque at the rotation.
- Allowable output shaft O.H.L. is the value at the middle of the output shaft.
- For the rotational direction of the output shaft, please refer to the figure shown below.
- The "*" mark indicates a limited torque type. Please make sure to check the allowable output shaft torque in the performance table.

■ Rotational Direction Relationship

The rotational direction shown below with arrow illustrates the rotation relationship between the output shaft / input shaft and is no way illustrating limitations in rotational direction.

Power	Reduction Ratio
0.1 kW	1/5 to 1/50 and 1/300 to 1/1200
0.2 kW, 0.4 kW	1/5 to 1/30 and 1/300 to 1/1200
0.75 kW	1/5 to 1/30 and 1/300 to 1/450
1.5 kW, 2.2 kW	1/5 to 1/30

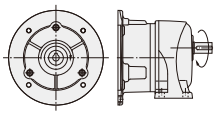

The input and output shafts rotate in the same direction.

Power	Reduction Ratio
0.1 kW	1/60 to 1/200
0.2 kW, 0.4 kW	1/40 to 1/200
0.75 kW, 1.5 kW	1/40 to 1/200
2.2 kW	1/40 to 1/100

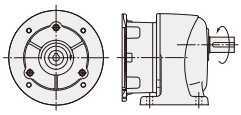

The input and output shafts rotate in the opposite directions.

4 Poles Motor Power Class	Frame Size	Reduction Ratio	Actual Reduction Ratio	Allowable Output Shaft Torque N·m 50 Hz	Allowable Output Shaft Torque N·m 60 Hz	Allowable Output Shaft O.H.L. N	Drawings Foot Mount	Drawings Flange Mount	Drawings Small Flange Mount
0.1 kW	18	1/5	33/164	3	2.5	770	P.203	P.209	P.212
		1/10	77/779	6.1	5	1140			
		1/15	119/1804	9.1	7.5	1270			
		1/20	49/984	12	9.8	1530			
		1/25	28/697	15	12.7	1650			
		1/30	35/1066	19	14.7	1780			
		1/40	35/1404	24	19.6	1910			
		1/50	7/351	29	24.5	2040			
	22	1/60	11/684	35	29.4	2800	P.203	P.209	P.213
		1/80	21/1634	47	39.2	3180			
		1/100	7/684	59	49	3180			
		1/120	147/17974	71	58.8	3180			
		1/160	21/3268	94	78.4	3180			
		1/200	21/4085	117	98	3180			
	28	1/300	221/65190	157	130	3430	P.204	P.210	P.214
		1/375	187/68370	196	163	3430			
		1/450	1183/521520	235	196	3430			
	32	1/600	147/88192	313	261	5880	P.205	P.211	P.215
		1/750	49/36464	391	326	5880			
		* 1/900	62/57063	431	391	5880			
		* 1/1200	46/55195	431	431	5880			
0.2 kW	18	1/5	33/164	6.1	5	770	P.203	P.209	P.212
		1/10	77/779	11.8	9.8	1140			
		1/15	119/1804	18.6	14.7	1270			
		1/20	49/984	24.5	20.6	1450			
		1/25	28/697	30.4	25.5	1550			
	22	1/30	7/216	36.3	30.4	2280	P.203	P.209	P.213
		1/40	91/3600	47	39.2	2410			
		1/50	11/540	58.8	49	2540			
		1/60	637/39600	70.6	58.8	2800			
		1/80	91/7200	94.1	78.4	3000			
		* 1/100	11/1080	97	80.4	3180			
	28	1/100	13/1353	117	98	3690	P.204	P.210	P.214
		1/120	91/11000	140	117	4320			
		1/160	1/165	187	156	4450			
		1/200	7/1375	234	195	4450			
	32	1/300	91/27348	313	261	5880	P.205	P.211	P.215
		1/375	77/28620	391	326	5880			
		1/450	91/41022	431	391	5880			
	40	1/600	9/5300	626	521	7060	P.206	P.211	-
		* 1/750	62/46427	764	653	7060			
		* 1/900	23/21259	764	764	7060			
		* 1/1200	9/10600	764	764	7060			

6-1. Performance Table

4 Poles Motor Power Class	Frame Size	Reduction Ratio	Actual Reduction Ratio	Allowable Output Shaft Torque N·m 50 Hz	Allowable Output Shaft Torque N·m 60 Hz	Allowable Output Shaft O.H.L. N	Drawings Foot Mount	Drawings Flange Mount	Drawings Small Flange Mount
0.4 kW	22	1/5	7/34	12	10	1140	P.203	P.209	P.213
		1/10	7/68	25	21	1530			
		1/15	49/748	36	30	1780			
		1/20	7/136	48	40	1910			
		1/25	7/170	61	50	2050			
	28	1/30	1/30	73	61	3310	P.204	P.210	P.214
		1/40	221/8610	94	78	3690			
		1/50	187/9030	117	98	4080			
		1/60	169/9840	140	117	4450			
		1/80	65/5166	187	156	4450			
		* 1/100	55/5418	193	161	4450			
	32	1/100	7/688	234	195	6370	P.205	P.211	P.215
		1/120	77/9360	281	234	7640			
		1/160	21/3328	374	313	7640			
		1/200	189/38272	431	390	7640			
	40	1/300	7/2160	626	521	7060	P.206	P.211	-
		* 1/375	77/29328	764	653	7060			
		* 1/450	49/21600	764	764	7060			
	50	* 1/600	57/35360	1225	1044	9800	P.207	P.212	-
		* 1/750	25/19448	1225	1225	9800			
		* 1/900	5/4338	1225	1225	9800			
		* 1/1200	33/40664	1225	1225	9800			
0.75 kW	28	1/5	91/459	23	19	1650	P.204	P.210	P.214
		1/10	1/10	45	38	2280			
		1/15	91/1360	68	57	2800			
		1/20	5/102	91	75	3050			
		1/25	7/170	114	94	3180			
	32	1/30	3/92	136	114	5220	P.205	P.211	P.215
		1/40	13/516	175	146	5470			
		1/50	11/540	220	183	5780			
		1/60	13/774	264	220	6080			
		1/80	13/1032	351	293	6180			
		* 1/100	11/1080	362	302	6770			
	40	1/100	91/9000	439	366	9170	P.206	P.211	-
		1/120	77/9400	527	439	9170			
		1/160	9/1400	703	585	9170			
		1/200	9/1750	764	732	9170			
	50	1/300	211/62013	1176	978	9800	P.207	P.212	-
		* 1/375	94/36103	1225	1225	9800			
		* 1/450	65/29167	1225	1225	9800			
1.5 kW	32	1/5	1/5	45	38	2280	P.205	P.211	P.215
		1/10	1/10	91	75	3180			
		1/15	1/15	136	114	3690			
		1/20	1/20	181	151	4190			
		1/25	9/230	226	189	4410			
	40	1/30	1/30	272	226	6600	P.206	P.211	-
		1/40	13/540	351	293	6960			
		1/50	11/564	439	366	6960			
		1/60	91/5400	527	439	7210			
		1/80	13/1080	703	585	7400			
		* 1/100	11/1128	724	603	7400			
	50	1/100	25/2618	878	732	12500	P.207	P.212	-
		1/120	77/8993	1060	878	12500			
		* 1/160	33/5474	1230	1170	12500			
		* 1/200	30/5831	1230	1230	12500			
2.2 kW	40	1/5	7/36	67	56	2800	P.206	P.211	-
		1/10	7/72	133	111	4080			
		1/15	49/720	200	167	4580			
		1/20	7/144	266	221	5220			
		1/25	7/180	332	277	6110			
	50	1/30	5/154	399	332	9040	P.207	P.212	-
		1/40	399/15488	515	429	9420			
		1/50	399/20240	644	537	10000			
		1/60	49/2904	773	644	10000			
		1/80	49/3795	1029	858	10100			
		* 1/100	21/2116	1230	1080	10100			

GA Type S-Type Gearboxes (Type which Can be Equipped with Designated Motor)

[Notes]
- The motor power class value is the value when a 4 pole motor is used.
- When using an output shaft for a motor other than a 4 pole motor, the value obtained by multiplying the torque by the torque correction coefficient shown on page 626 shall be the allowable output shaft torque at the rotation.
- Allowable output shaft O.H.L. is the value at the middle of the output shaft.
- For the rotational direction of the output shaft, please refer to the figure shown below.
- The "*" mark indicates a limited torque type. Please make sure to check the allowable output shaft torque in the performance table.

■ Rotational Direction Relationship

The rotational direction shown below with arrow illustrates the rotation relationship between the output shaft / input shaft and is no way illustrating limitations in rotational direction.

Power	Reduction Ratio
0.4 kW	1/300 to 1/1200
0.75 kW	1/300 to 1/450
1.5 kW, 2.2 kW	1/30

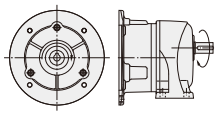

The input and output shafts rotate in the same direction.

Power	Reduction Ratio
2.2 kW	1/40 to 1/100

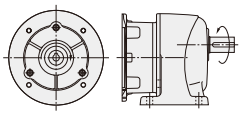

The input and output shafts rotate in the opposite directions.

4 Poles Motor Power Class	Frame Size	Reduction Ratio	Actual Reduction Ratio	Allowable Output Shaft Torque N·m 50 Hz	Allowable Output Shaft Torque N·m 60 Hz	Allowable Output Shaft O.H.L. N	Drawings Foot Mount	Drawings Flange Mount	Drawings Small Flange Mount
0.4 kW	50	* 1/600	57/35360	1225	1044	9800	P.208	-	-
		* 1/750	25/19448	1225	1225	9800			
		* 1/900	5/4338	1225	1225	9800			
		* 1/1200	33/40664	1225	1225	9800			
0.75 kW	50	1/300	211/62013	1176	978	9800	P.208	-	-
		* 1/375	94/36103	1225	1225	9800			
		* 1/450	65/29167	1225	1225	9800			
1.5 kW	50	1/100	25/2618	878	732	12500	P.208	-	-
		1/120	77/8993	1060	878	12500			
		* 1/160	33/5474	1230	1170	12500			
		* 1/200	30/5831	1230	1230	12500			
2.2 kW	50	1/30	5/154	399	332	9040	P.208	-	-
		1/40	399/15488	515	429	9420			
		1/50	399/20240	644	537	10000			
		1/60	49/2904	773	644	10000			
		1/80	49/3795	1029	858	10100			
		* 1/100	21/2116	1230	1080	10100			

6-2. Drawings

G3 Type Parallel Shaft | Shaft Diameter **18** | **Foot** Mounting

<Figure 1>

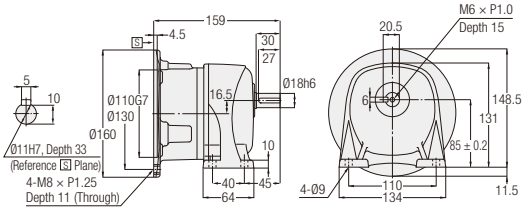

Power Class	Part Number	Reduction Ratio	Figure Number	Approx. Weight (kg)
0.1 kW	G3LS-18-∗∗∗-010	5, 10, 15, 20, 25, 30, 40, 50	1	3.5
0.2 kW	G3LS-18-∗∗∗-020	5, 10, 15, 20, 25	1	3.5

Note: A reduction ratio will be indicated as ∗∗∗ in the nomenclature.
Note: Please refer to page 200 for the performance table.
Note: Please refer to page 628 for the details of the motor mounting area.

G3 Type Parallel Shaft | Shaft Diameter **22** | **Foot** Mounting

<Figure 2>

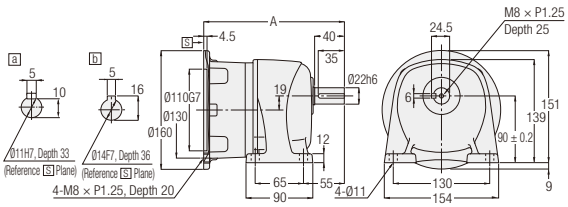

Power Class	Part Number	Reduction Ratio	Input Shaft	Figure Number	Approx. Weight (kg)	A	B
0.1 kW	G3LS-22-∗∗∗-010	60, 80, 100, 120, 160, 200	a	2	4.5	185	11 (Through)
0.2 kW	G3LS-22-∗∗∗-020	30, 40, 50, 60, 80, 100	a	2	4.5	185	11 (Through)
0.4 kW	G3LS-22-∗∗∗-040	5, 10, 15, 20, 25	b	2	5	189.5	20

Note: A reduction ratio will be indicated as ∗∗∗ in the nomenclature.
Note: Please refer to page 200 for the performance table.
Note: Please refer to page 628 for the details of the motor mounting area.

G3 Type Parallel Shaft | Shaft Diameter 28 | Foot Mounting

<Figure 1>

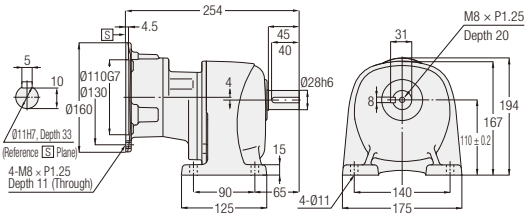

<Figure 2>

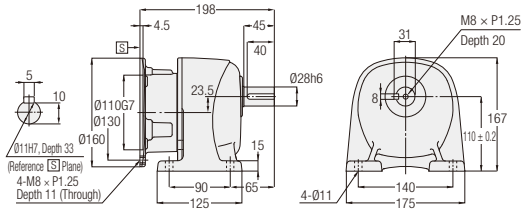

<Figure 3>

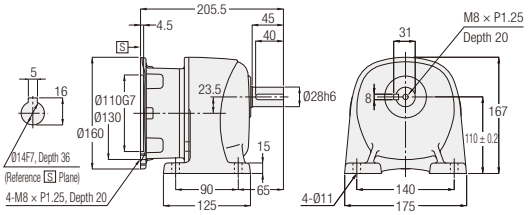

<Figure 4>

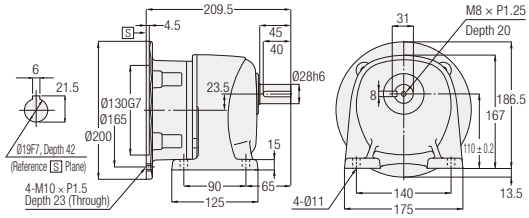

Power Class	Part Number	Reduction Ratio	Figure Number	Approx. Weight (kg)
0.1 kW	G3LS-28-***-010	300, 375, 450	1	7.5
0.2 kW	G3LS-28-***-020	100, 120, 160, 200	2	6.5
0.4 kW	G3LS-28-***-040	30, 40, 50, 60, 80, 100	3	7
0.75 kW	G3LS-28-***-075	5, 10, 15, 20, 25	4	6.5

Note: A reduction ratio will be indicated as *** in the nomenclature.
Note: Please refer to page 200 for the performance table.
Note: Please refer to page 628 for the details of the motor mounting area.

G3 Type Parallel Shaft | Shaft Diameter 32 | **Foot** Mounting

<Figure 1>

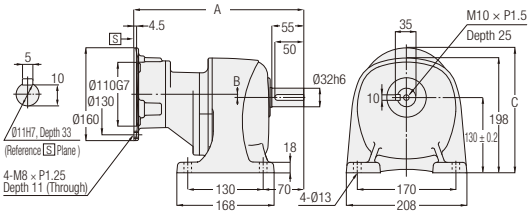

<Figure 2>

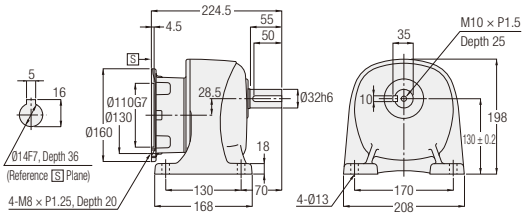

<Figure 3>

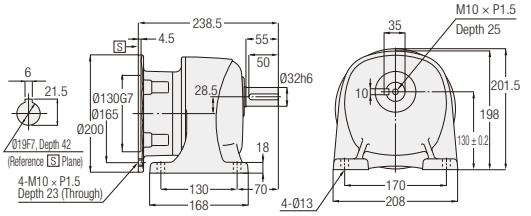

<Figure 4>

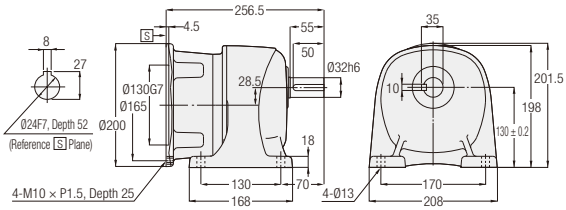

Power Class	Part Number	Reduction Ratio	Figure Number	Approx. Weight (kg)	A	B	C
0.1 kW	G3LS-32-∗∗∗-010	600, 750, 900, 1200	1	10.5	273	-1	209
0.2 kW	G3LS-32-∗∗∗-020	300, 375, 450	1	10.5	293	5.5	215.5
0.4 kW	G3LS-32-∗∗∗-040	100, 120, 160, 200	2	10	-	-	-
0.75 kW	G3LS-32-∗∗∗-075	30, 40, 50, 60, 80, 100	3	10	-	-	-
1.5 kW	G3LS-32-∗∗∗-150	5, 10, 15, 20, 25	4	11.5	-	-	-

Note: A reduction ratio will be indicated as ∗∗∗ in the nomenclature.
Note: Please refer to page 200 for the performance table.
Note: Please refer to page 628 for the details of the motor mounting area.

G3 Type Parallel Shaft | Shaft Diameter 40 | Foot Mounting

<Figure 1>

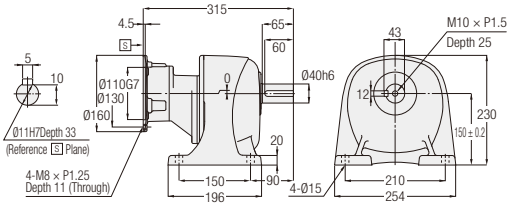

<Figure 2>

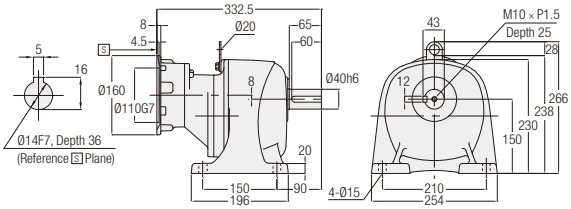

<Figure 3>

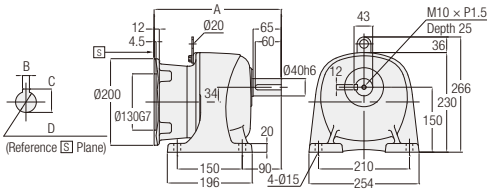

<Figure 4>

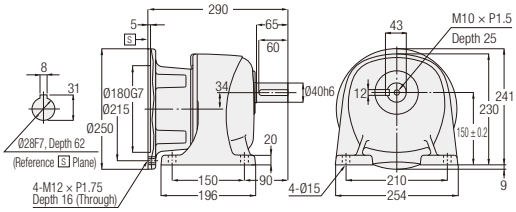

Note: Gearmotors with a motor power of 0.75 kW does not include the hanging plate.

Power Class	Part Number	Reduction Ratio	Figure Number	Approx. Weight (kg)	A	B	C	D
0.2 kW	G3LS-40-∗∗∗-020	600, 750, 900, 1200	1	17	-	-	-	-
0.4 kW	G3LS-40-∗∗∗-040	300, 375, 450	2	18.5	-	-	-	-
0.75 kW	G3LS-40-∗∗∗-075	100, 120, 160, 200	3	16.5	260.5	6	21.5	Ø19F7, Depth 42
1.5 kW	G3LS-40-∗∗∗-150	30, 40, 50, 60, 80, 100	3	18.5	293.5	8	27	Ø24F7, Depth 52
2.2 kW	G3LS-40-∗∗∗-220	5, 10, 15, 20, 25	4	18	-	-	-	-

Note: A reduction ratio will be indicated as ∗∗∗ in the nomenclature.
Note: Please refer to page 200 for the performance table.
Note: Please refer to page 628 for the details of the motor mounting area.

G3 Type Parallel Shaft | Shaft Diameter **50** | **Foot** Mounting

<Figure 1>

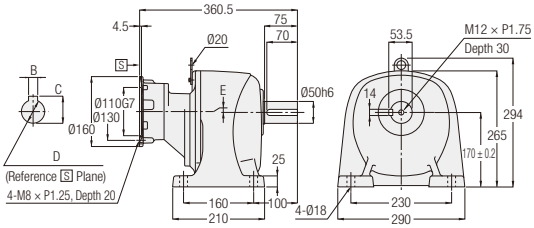

<Figure 2>

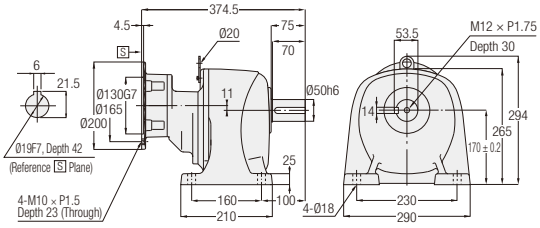

<Figure 3>

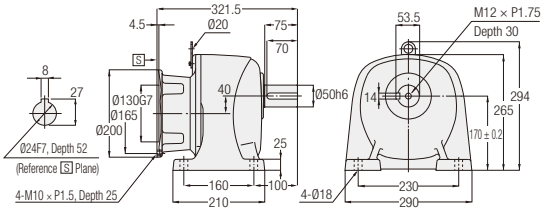

<Figure 4>

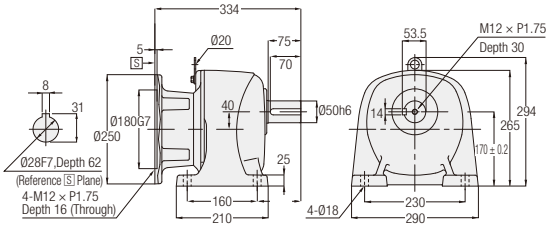

Power Class	Part Number	Reduction Ratio	Figure Number	Approx. Weight (kg)
0.4 kW	G3LS-50-∗∗∗-040	600, 750, 900, 1200	1	48
0.75 kW	G3LS-50-∗∗∗-075	300, 375, 450	2	48
1.5 kW	G3LS-50-∗∗∗-150	100, 120, 160, 200	3	48
2.2 kW	G3LS-50-∗∗∗-220	30, 40, 50, 60, 80, 100	4	48

Note: A reduction ratio will be indicated as ∗∗∗ in the nomenclature.
Note: Please refer to page 201 for the performance table.
Note: Please refer to page 628 for the details of the motor mounting area.

GA Type Parallel Shaft | Shaft Diameter 50 | Foot Mounting

<Figure 1>

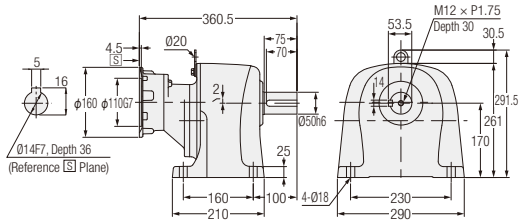

<Figure 2>

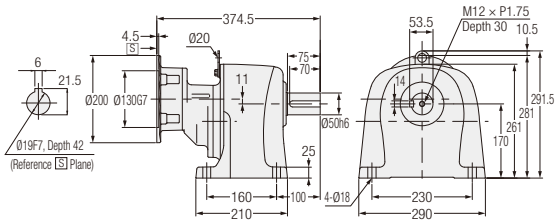

<Figure 3>

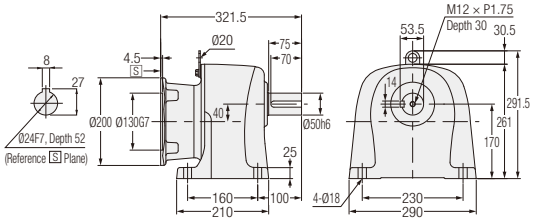

<Figure 4>

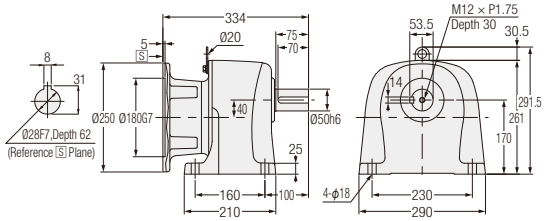

Power Class	Part Number	Reduction Ratio	Figure Number	Approx. Weight (kg)
0.4 kW	GALS-50-∗∗∗-040	600, 750, 900, 1200	1	28.5
0.75 kW	GALS-50-∗∗∗-075	300, 375, 450	2	28.5
1.5 kW	GALS-50-∗∗∗-150	100, 120, 160, 200	3	28.5
2.2 kW	GALS-50-∗∗∗-220	30, 40, 50, 60, 80, 100	4	28.5

Note: A reduction ratio will be indicated as ∗∗∗ in the nomenclature.
Note: Please refer to page 202 for the performance table.
Note: Please refer to page 628 for the details of the motor mounting area.

G3 Type Parallel Shaft | Shaft Diameter 18 | Flange Mounting

<Figure 1>

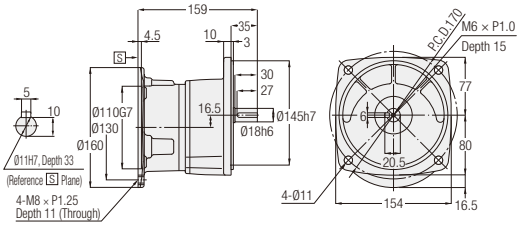

Power Class	Part Number	Reduction Ratio	Figure Number	Approx. Weight (kg)
0.1 kW	G3FS-18-∗∗∗-010	5, 10, 15, 20, 25, 30, 40, 50	1	4
0.2 kW	G3FS-18-∗∗∗-020	5, 10, 15, 20, 25	1	4

Note: A reduction ratio will be indicated as ∗∗∗ in the nomenclature.
Note: Please refer to page 200 for the performance table.
Note: Please refer to page 628 for the details of the motor mounting area.

G3 Type Parallel Shaft | Shaft Diameter 22 | Flange Mounting

<Figure 2>

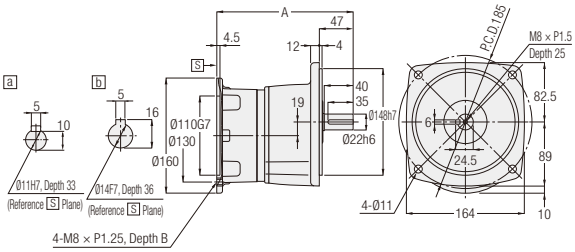

Power Class	Part Number	Reduction Ratio	Figure Number	Approx. Weight (kg)	Input Shaft	A	B
0.1 kW	G3FS-22-∗∗∗-010	60, 80, 100, 120, 160, 200	2	5	a	185	11 (Through)
0.2 kW	G3FS-22-∗∗∗-020	30, 40, 50, 60, 80, 100	2	5	a	185	11 (Through)
0.4 kW	G3FS-22-∗∗∗-040	5, 10, 15, 20, 25	2	5.5	b	189.5	20

Note: A reduction ratio will be indicated as ∗∗∗ in the nomenclature.
Note: Please refer to page 200 for the performance table.
Note: Please refer to page 628 for the details of the motor mounting area.

G3 Type Parallel Shaft | Shaft Diameter 28 | Flange Mounting

<Figure 1>

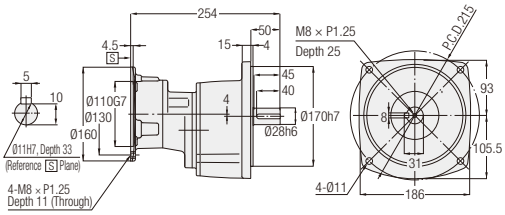

<Figure 2>

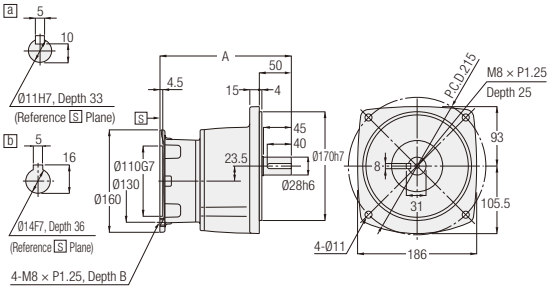

<Figure 3>

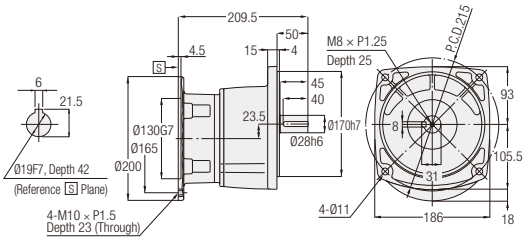

Power Class	Part Number	Reduction Ratio	Figure Number	Approx. Weight (kg)	Input Shaft	A	B
0.1 kW	G3FS-28-∗∗∗-010	300, 375, 450	1	8	-	-	-
0.2 kW	G3FS-28-∗∗∗-020	100, 120, 160, 200	2	7	a	198	11 (Through)
0.4 kW	G3FS-28-∗∗∗-040	30, 40, 50, 60, 80, 100	2	7.5	b	205.5	20
0.75 kW	G3FS-28-∗∗∗-075	5, 10, 15, 20, 25	3	7	-	-	-

Note: A reduction ratio will be indicated as ∗∗∗ in the nomenclature.
Note: Please refer to page 200 for the performance table.
Note: Please refer to page 628 for the details of the motor mounting area.

G3 Type Parallel Shaft | Shaft Diameter 32 | Flange Mounting

<Figure 1>

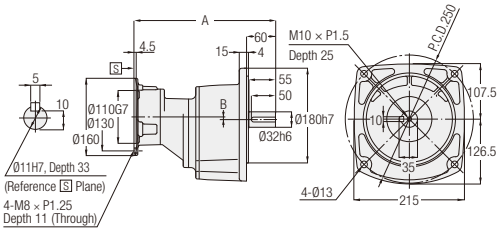

<Figure 2>

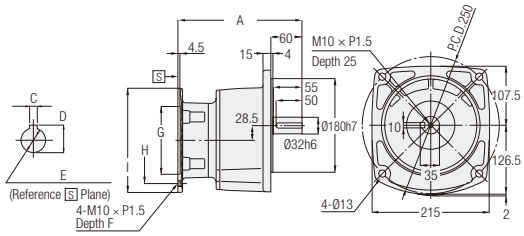

Power Class	Part Number	Reduction Ratio	Figure Number	Approx. Weight (kg)	A	B	C	D	E	F	G	H	I
0.1 kW	G3FS-32-∗∗∗-010	600, 750, 900, 1200	1	11	273	-1	-	-	-	-	-	-	-
0.2 kW	G3FS-32-∗∗∗-020	300, 375, 450	1	11	293	5.5	-	-	-	-	-	-	-
0.4 kW	G3FS-32-∗∗∗-040	100, 120, 160, 200	2	10.5	224.5	-	5	16	Ø14F7, Depth 36	20	Ø110G7	Ø130	Ø160
0.75 kW	G3FS-32-∗∗∗-075	30, 40, 50, 60, 80, 100	2	10.5	238.5	-	6	21.5	Ø19F7, Depth 42	23 (Through)	Ø130G7	Ø165	Ø200
1.5 kW	G3FS-32-∗∗∗-150	5, 10, 15, 20, 25	2	11	256.5	-	8	27	Ø24F7, Depth 52	25	Ø130G7	Ø165	Ø200

Note: A reduction ratio will be indicated as ∗∗∗ in the nomenclature.
Note: Please refer to page 200 for the performance table.
Note: Please refer to page 628 for the details of the motor mounting area.

G3 Type Parallel Shaft | Shaft Diameter 40 | Flange Mounting

<Figure 3>

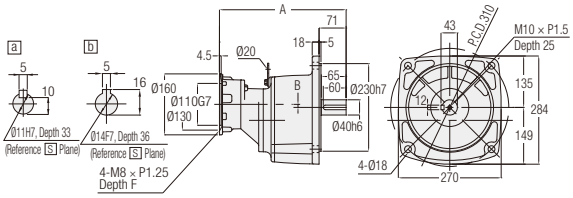

<Figure 4>

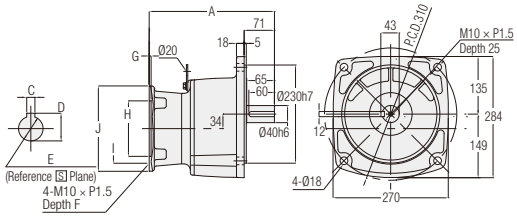

Note: Gearmotors with a motor power of 0.2 kW or 0.75 kW does not include the hanging plate.

Power Class	Part Number	Reduction Ratio	Figure Number	Approx. Weight (kg)	Input Shaft	A	B	C	D	E	F	G	H	I	J
0.2 kW	G3FS-40-∗∗∗-020	600, 750, 900, 1200	3	18.5	a	315	0	-	-	-	11 (Through)	-	-	-	-
0.4 kW	G3FS-40-∗∗∗-040	300, 375, 450	3	20	b	332.5	8	20	-	-	-	-	-	-	-
0.75 kW	G3FS-40-∗∗∗-075	100, 120, 160, 200	4	18	-	260.5	-	6	21.5	Ø19F7, Depth 42	23 (Through)	4.5	Ø130G7	Ø165	Ø200
1.5 kW	G3FS-40-∗∗∗-150	30, 40, 50, 60, 80, 100	4	20	-	293.5	-	8	27	Ø24F7, Depth 52	25	4.5	Ø130G7	Ø165	Ø200
2.2 kW	G3FS-40-∗∗∗-220	5, 10, 15, 20, 25	4	19.5	-	290	-	8	31	Ø28F7, Depth 62	16 (Through)	5	Ø130G7	Ø215	Ø250

Note: A reduction ratio will be indicated as ∗∗∗ in the nomenclature.
Note: Please refer to page 200 for the performance table.
Note: Please refer to page 628 for the details of the motor mounting area.

G3 Type Parallel Shaft | Shaft Diameter 50 | Flange Mounting

<Figure 1>

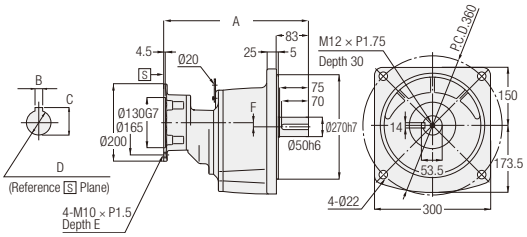

<Figure 2>

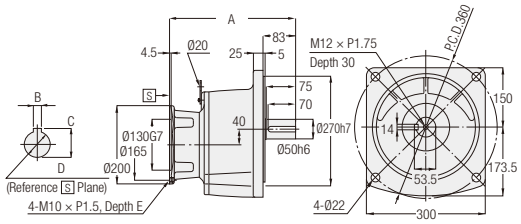

Power Class	Part Number	Reduction Ratio	Figure Number	Approx. Weight (kg)	A	B	C	D	E	F
0.4 kW	G3FS-50-∗∗∗-040	600, 750, 900, 1200	1	53	360.5	5	16	Ø14F7, Depth 36	20	2
0.75 kW	G3FS-50-∗∗∗-075	300, 375, 450	1	53	374.5	6	21.5	Ø19F7, Depth 42	23 (Through)	11
1.5 kW	G3FS-50-∗∗∗-150	100, 120, 160, 200	2	53	321.5	8	27	Ø24F7, Depth 52	25	-
2.2 kW	G3FS-50-∗∗∗-220	30, 40, 50, 60, 80, 100	2	53	334	8	31	Ø28F7, Depth 62	16 (Through)	-

Note: A reduction ratio will be indicated as ∗∗∗ in the nomenclature.
Note: Please refer to page 201 for the performance table.
Note: Please refer to page 628 for the details of the motor mounting area.

G3 Type Parallel Shaft | Shaft Diameter 18 | Small Flange Mounting

<Figure 3>

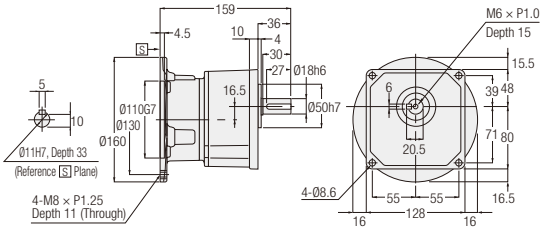

Power Class	Part Number	Reduction Ratio	Figure Number	Approx. Weight (kg)
0.1 kW	G3KS-18-∗∗∗-010	5, 10, 15, 20, 25, 30, 40, 50	3	4
0.2 kW	G3KS-18-∗∗∗-020	5, 10, 15, 20, 25	3	4

Note: A reduction ratio will be indicated as ∗∗∗ in the nomenclature.
Note: Please refer to page 200 for the performance table.
Note: Please refer to page 628 for the details of the motor mounting area.

G3 Type Parallel Shaft | Shaft Diameter 22 | **Small Flange** Mounting

<Figure 1>

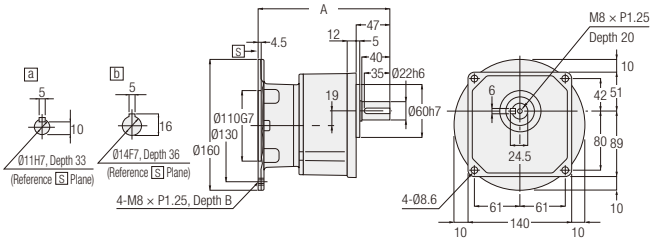

Power Class	Part Number	Reduction Ratio	Figure Number	Approx. Weight (kg)	Input Shaft	A	B
0.1 kW	G3KS-22-∗∗∗-010	60, 80, 100, 120, 160, 200	1	5	a	185	11 (Through)
0.2 kW	G3KS-22-∗∗∗-020	30, 40, 50, 60, 80, 100	1	5	a	185	11 (Through)
0.4 kW	G3KS-22-∗∗∗-040	5, 10, 15, 20, 25	1	5.5	b	189.5	20

Note: A reduction ratio will be indicated as ∗∗∗ in the nomenclature.
Note: Please refer to page 200 for the performance table.
Note: Please refer to page 628 for the details of the motor mounting area.

G3 Type Parallel Shaft | Shaft Diameter 28 | Small Flange Mounting

<Figure 1>

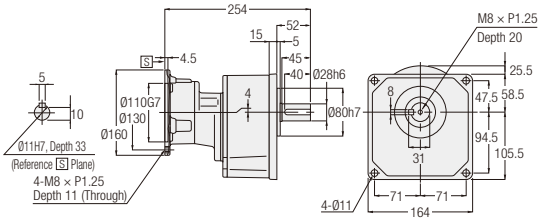

<Figure 2>

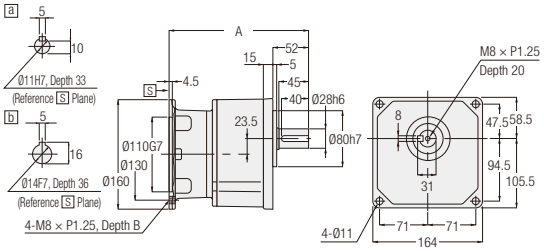

<Figure 3>

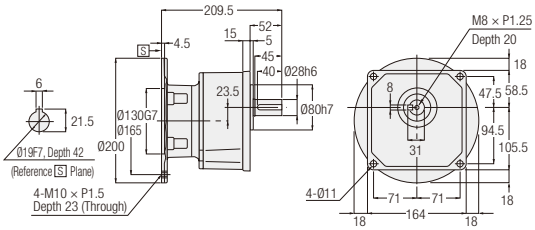

Power Class	Part Number	Reduction Ratio	Figure Number	Approx. Weight (kg)	Input Shaft	A	B
0.1 kW	G3KS-28-∗∗∗-010	300, 375, 450	1	8	-	-	-
0.2 kW	G3KS-28-∗∗∗-020	100, 120, 160, 200	2	7	a	198	11 (Through)
0.4 kW	G3KS-28-∗∗∗-040	30, 40, 50, 60, 80, 100	2	7.5	b	205.5	20
0.75 kW	G3KS-28-∗∗∗-075	5, 10, 15, 20, 25	3	7	-	-	-

Note: A reduction ratio will be indicated as ∗∗∗ in the nomenclature.
Note: Please refer to page 200 for the performance table.
Note: Please refer to page 628 for the details of the motor mounting area.

G3 Type Parallel Shaft | Shaft Diameter 32 | **Small Flange** Mounting

<Figure 1>

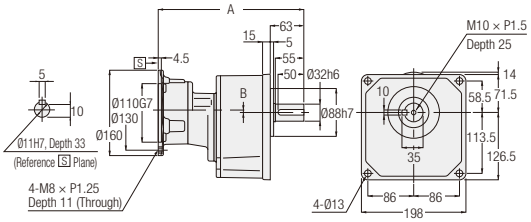

<Figure 2>

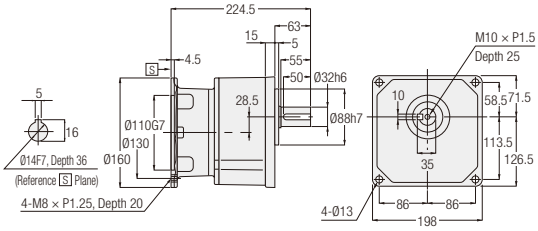

<Figure 3>

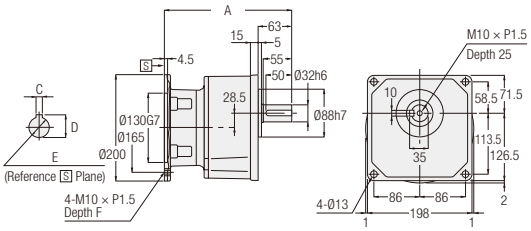

Power Class	Part Number	Reduction Ratio	Figure Number	Approx. Weight (kg)	A	B	C	D	E	F
0.1 kW	G3KS-32-∗∗∗-010	600, 750, 900, 1200	1	11	273	-1	-	-	-	-
0.2 kW	G3KS-32-∗∗∗-020	300, 375, 450	1	11	293	5.5	-	-	-	-
0.4 kW	G3KS-32-∗∗∗-040	100, 120, 160, 200	2	10.5	-	-	-	-	-	-
0.75 kW	G3KS-32-∗∗∗-075	30, 40, 50, 60, 80, 100	3	10.5	238.5	-	6	21.5	Ø19F7, Depth 42	23 (Through)
1.5 kW	G3KS-32-∗∗∗-150	5, 10, 15, 20, 25	3	12	256.5	-	8	27	Ø24F7, Depth 52	25

Note: A reduction ratio will be indicated as ∗∗∗ in the nomenclature.
Note: Please refer to page 200 for the performance table.
Note: Please refer to page 628 for the details of the motor mounting area.

MEMO

H/H2 Type

Right Angle Shaft

Standard Specification
Model and Type Codes
Standard Model Lineup

INDUCTION GEARMOTORS

P.242 **1. Gearmotors/Gearmotors with Brake**
- **1-1. Motor Characteristics Table**
- **1-2. Performance Table**
- **1-3. Drawings**

P.276 **2. IP65 Gearmotors/ IP65 Gearmotors with Brake**
- **2-1. Motor Characteristics Table**
- **2-2. Performance Table**
- **2-3. Drawings**

P.294 **3. Gearmotors with Clutch/Brake**
- **3-1. Motor Characteristics Table**
- **3-2. Performance Table**
- **3-3. Drawings**

P.300 **4. Speed Control Gearmotors**
- **4-1. Properties and Motor Characteristics Table**
- **4-2. Graph for Speed Characteristics**
- **4-3. Performance Table**
- **4-4. Drawings**

P.314 **5. Gearboxes (Double Shaft Type)**
- **5-1. Performance Table**
- **5-2. Drawings**

P.322 **6. S-Type Gearboxes (Type That Can Be Equipped with Designated Motor)**
- **6-1. Performance Table**
- **6-2. Drawings**

Standard Specification

H Type Gearmotors/Gearmotors with Brake

Series		MINI	
Motor Unit	Number of Phases	3-Phase	1-Phase
	Power	15 W to 90 W	
	Power Supply	Standard Voltage 200 V/50 Hz, 200 V/60 Hz, 220 V/60 Hz High Voltage (400 V Class) 380 V/50 Hz, 400 V/50 Hz, 400 V/60 Hz, 440 V/60 Hz	Standard Voltage 100 V/50 Hz, 100 V/60 Hz High Voltage (200 V Class) 200 V/50 Hz, 200 V/60 Hz
	Insulation Class	Ins. B	
	Startup Method	Direct Power Input	Capacitor Run
	Cooling Method	Totally Enclosed Non-Ventilated (TENV) (IC410) or Totally Enclosed Fan Cooled (TEFC) (IC411)	
	Number of Motor Poles	4	
	Rating	Continuous	
Gearbox	Reduction Type	Hypoid Gear and Helical Gear	
	Lubrication Type	Grease Lubrication (Maintenance-free)	
	Output Shaft	JIS Key (JIS B 1301-1996 plain form) * The key is included.	
	Output Shaft Material	Carbon Steel	
	Case Material	Aluminum	
Ambient Conditions	Ambient Temperature	-10 °C to 40 °C	
	Ambient Humidity	85 % max (No Condensation)	
	Altitude	1,000 m max	
	Installation Environment	A place free from corrosive gas, explosive gas, and/or vapor. Well ventilated place with no dust.	
	Installation Place	Indoors	
Paint	Paint Color	Gray	
Mounting Direction		No limitations to mounting angle	
Motor Characteristics Table		P.242	P.243
Performance Table		P.246	P.246
Drawings		P.254	P.254

H2 Type Gearmotors/Gearmotors with Brake

Series		MID				
Motor Unit	Number of Phases	3-Phase				1-Phase
	Power	0.1 kW to 2.2 kW				0.1 kW to 0.4 kW
	Power Supply	Type	Global Standards Conformance	Power Supply/Frequency		Standard Voltage 100 V/50 Hz, 100 V/60 Hz High Voltage (200 V Class) 200 V/50 Hz, 200 V/60 Hz
		Standard Voltage	UL/CE/CCC	200 V/50 Hz, 200 V/60 Hz, 220 V/60 Hz		
		High Voltage (400 V Class)	UL/CE/CCC	380 V/50 Hz, 400 V/50 Hz, 400 V/60 Hz, 440 V/60 Hz		
		Special Voltage	South Korea/ Taiwan UL/CE/CCC	220 V/60 Hz, 380 V/60 Hz (Dual Voltage)		
			China UL/CE/CCC	220 V/50 Hz, 230 V/50 Hz, 380 V/50 Hz (Dual Voltage)		
			China/South Korea/Taiwan UL/CE/CCC	220 V/ 50Hz, 220 V/60 Hz, 380 V/50 Hz, 380 V/60 Hz (Dual Voltage) (Note 1)		
			Europe/North America UL/cUL/CE/CCC	415 V/50 Hz, 440 V/50 Hz, 480 V/60 Hz		
			North America/ Europe UL/cUL/CE/CCC	230 V/60 Hz, 460 V/60 Hz, 400 V/50 Hz (Dual Voltage) (Note 2)		
			North America/ Europe UL/cUL/CE/CCC	208 V/60 Hz, 230 V/60 Hz, 460 V/60 Hz, 400 V/50 Hz (Note 3)		
			Canada UL/cUL	575 V/60 Hz		
	Insulation Class	Ins. F				Ins. B
	Startup Method	Direct Power Input				Capacitor Start (0.1 kW: Capacitor Run)
	Cooling Method	Totally Enclosed Fan Cooled (TEFC) (IC411) (All of 0.1 kW and 0.2 kW models without brake are totally enclosed non-ventilated (TENV) (IC410))				Totally Enclosed Fan Cooled (TEFC) (IC411)
	Number of Motor Poles	4				
	Rating	Power	Motor Efficiency	UL/CE Standard	CCC Standard	Continuous
		0.1 kW	IE1	Continuous	Continuous	
		0.2 kW, 0.4 kW (Note 4)	IE2	Continuous	Short Time (120 minutes)	
		0.75 kW or above	IE3, GB3	Continuous	Continuous	
Gearbox	Reduction Type	Hypoid Gear and Helical Gear				
	Lubrication Type	Grease Lubrication (Maintenance-free)				
	Output Shaft	JIS Key (JIS B 1301-1996 plain form) * The key is included.				
	Output Shaft Material	Carbon Steel				
	Case Material	Aluminum (Frame Size 50: Cast Iron, 1.5 kW Frame Size 40: Aluminum Casting)				Aluminum (Frame size 50 is made of cast iron.)
Ambient Conditions	Ambient Temperature	-10 °C to 40 °C (Note 5)				
	Ambient Humidity	85 % max (No Condensation)				
	Altitude	1,000 m max				
	Installation Environment	A well ventilated place free from corrosive gas, explosive gas, vapor and/or chemicals Not to be exposed to direct rain. Not to be exposed to direct sunlight. The brake should not to be exposed to water, dust, oil/grease, or oil mist. Models with water protection rating IPX0 shall not be exposed directly to water.				
Paint	Paint Color	Gray				
Protective Structure (Note 6)		IP44 or IP40				IP40 or IP44
Mounting Direction		No limitations to mounting angle				
Motor Characteristics Table		P.244				P.245
Performance Table		P.249				P.252
Drawings		P.257				P.258

Note 1: Applicable motor power is 0.1 kW to 0.75 kW.
Note 2: Applicable motor power is 0.75 kW to 2.2 kW.
Note 3: Applicable motor power is 0.1 kW to 0.4 kW.
Note 4: For CCC Standard, Three-phase 0.2 kW and Three-phase 0.4 kW are certified under limited duty cycle. Please be cautious upon selecting this product.
Note 5: The ambient temperature for Single-phase motors with a power of 0.1 kW (capacitor run) is 0 °C to 40 °C.
Note 6: The protective structure differs depending on the model.

H/H2 Type IP65 Gearmotors/IP65 Gearmotors with Brake

Series		MINI		MID			
Motor Unit	Number of Phases	3-Phase	1-Phase	3-Phase			
	Power	15 W to 90 W	15 W to 40 W	0.1 kW to 2.2 kW			
	Power Supply	Standard Voltage 200 V/50 Hz, 200 V/60 Hz, 220 V/60 Hz High Voltage (400 V Class) 380 V/50 Hz, 400 V/50 Hz, 400 V/60 Hz, 440 V/60 Hz	Standard Voltage 100 V/50 Hz, 100 V/60 Hz	Type	Global Standards Conformance	Power Supply/ Frequency	
				Standard Voltage	UL/CE/CCC	200 V/50 Hz, 200 V/60 Hz, 220 V/60 Hz	
				High Voltage (400 V Class)	UL/CE/CCC	380 V/50 Hz, 400 V/50 Hz, 400 V/60 Hz, 440 V/60 Hz	
				Special Voltage	South Korea/ Taiwan UL/CE/CCC	220 V/60 Hz, 380 V/60 Hz (Dual Voltage)	
					China UL/CE/CCC	220 V/50 Hz, 230 V/50 Hz, 380 V/50 Hz (Dual Voltage)	
					China/South Korea/Taiwan UL/CE/CCC	220 V/50 Hz, 220 V/60 Hz, 380 V/50 Hz, 380 V/60 Hz (Dual Voltage) (Note 1)	
					Europe/North America UL/cUL/CE/CCC	415 V/50 Hz, 440 V/50 Hz, 480 V/60 Hz	
					North America/ Europe UL/cUL/CE/CCC	230 V/60 Hz, 460 V/60 Hz, 400 V/50 Hz (Dual Voltage) (Note 2)	
					North America/ Europe UL/cUL/CE/CCC	208 V/60 Hz, 230 V/60 Hz, 460 V/60 Hz, 400 V/50 Hz (Note 3)	
					Canada UL/cUL	575 V/60 Hz	
	Insulation Class	Ins. B		Ins. F			
	Startup Method	Direct Power Input	Capacitor Run	Direct Power Input			
	Cooling Method	Totally Enclosed Non-Ventilated (TENV) (IC410)		Totally Enclosed Fan Cooled (TEFC) (IC411) (All of 0.1 kW and 0.2 kW models without brake are totally enclosed non-ventilated (TENV) (IC410))			
	Number of Motor Poles	4					
	Rating	Continuous		Power	Motor Efficiency	UL/CE Standard	CCC Standard
				0.1 kW	IE1	Continuous	Continuous
				0.2 kW, 0.4 kW (Note 4)	IE2	Continuous	Short Time (120 minutes)
				0.75 kW or above	IE3, GB3	Continuous	Continuous
Gearbox	Reduction Type	Hypoid Gear and Helical Gear					
	Lubrication Type	Grease Lubrication (Maintenance-free)					
	Output Shaft	JIS Key (JIS B 1301-1996 plain form) * The key is included.					
	Output Shaft Material	Stainless Steel		Stainless steel or carbon steel			
	Case Material	Aluminum		Aluminum (Frame Size 50: Cast Iron, 1.5 kW Frame Size 40: Aluminum Casting)			
Ambient Conditions	Ambient Temperature	-10 °C to 40 °C					
	Ambient Humidity	100 % max (No Condensation)					
	Altitude	1,000 m max					
	Installation Environment	A place free from corrosive gas, explosive gas, and/or vapor Not to be exposed to strong rain and wind. Not to be exposed to direct sunlight. Not to be used underwater, environments with exposure to high pressure water splashes, and exposure to cleansing chemicals.					
Paint	Paint Color	Gray					
Protective Structure		IP65					
Mounting Direction		No limitations to mounting angle					
Motor Characteristics Table		P.276		P.277			
Performance Table		P.278		P.280			
Drawings		P.283		P.285			

Note 1: Applicable motor power is 0.1 kW to 0.75 kW.
Note 2: Applicable motor power is 0.75 kW to 2.2 kW.
Note 3: Applicable motor power is 0.1 kW to 0.4 kW.
Note 4: For CCC Standard, Three-phase 0.2 kW and Three-phase 0.4 kW are certified under limited duty cycle. Please be cautious upon selecting this product.

H2 Type Gearmotors with Clutch/Brake

Series		MID
Motor Unit	Number of Phases	3-Phase
	Power	0.2 kW to 0.75 kW
	Power Supply	Standard Voltage 200 V/50 Hz, 200 V/60 Hz, 220 V/60 Hz High Voltage (400 V Class) 380 V/50 Hz, 400 V/50 Hz, 400 V/60 Hz, 440 V/60 Hz
	Insulation Class	Ins. F
	Startup Method	Direct Power Input
	Cooling Method	Totally Enclosed Fan Cooled (TEFC) (IC411) (0.2 kW model: totally enclosed non-ventilated (TENV) (IC410))
	Number of Motor Poles	4
	Rating	Continuous
Gearbox	Reduction Type	Hypoid Gear and Helical Gear
	Lubrication Type	Grease Lubrication (Maintenance-free)
	Output Shaft	JIS Key (JIS B 1301-1996 plain form) * The key is included.
	Output Shaft Material	Carbon Steel
	Case Material	Aluminum
Ambient Conditions	Ambient Temperature	-10 °C to 40 °C
	Ambient Humidity	85 % max (No Condensation)
	Altitude	1,000 m max
	Installation Environment	A place free from corrosive gas, explosive gas, and/or vapor. Well ventilated place with no dust.
	Installation Place	Indoors
Paint	Paint Color	Gray
Mounting Direction		No limitations to mounting angle
Motor Characteristics Table		P.294
Performance Table		P.295
Drawings		P.296

H Type Speed Control Gearmotors

Series		MINI
Motor Unit	Number of Phases	1-Phase
	Power	15 W to 90 W
	Power Supply	Standard Voltage 100 V/50 Hz, 100 V/60 Hz High Voltage (200 V Class) 200 V/50 Hz, 200 V/60 Hz
	Insulation Class	Ins. B
	Startup Method	Capacitor Run
	Cooling Method	Totally Enclosed Non-Ventilated (TENV) (IC410) (60 to 90 W: provided with a forced fan)
	Number of Motor Poles	4
	Rating	Continuous
Gearbox	Reduction Type	Hypoid Gear and Helical Gear
	Lubrication Type	Grease Lubrication (Maintenance-free)
	Output Shaft	JIS Key (JIS B 1301-1996 plain form) * The key is included.
	Output Shaft Material	Carbon Steel
	Case Material	Aluminum
Ambient Conditions	Ambient Temperature	-10 °C to 40 °C
	Ambient Humidity	85 % max (No Condensation)
	Altitude	1,000 m max
	Installation Environment	A place free from corrosive gas, explosive gas, and/or vapor. Well ventilated place with no dust.
	Installation Place	Indoors
Paint	Paint Color	Gray
Mounting Direction		No limitations to mounting angle
Motor Characteristics Table		P.300
Performance Table		P.302
Drawings		P.305

H2 Type Gearboxes (Double Shaft Type)

Series		MID
4 Poles Motor Power Class		0.2 kW Class to 2.2 kW Class
Gearbox	Reduction Type	Hypoid Gear and Helical Gear
	Lubrication Type	Grease Lubrication (Maintenance-free)
	Output Shaft	JIS Key (JIS B 1301-1996 plain form) * The key is included.
	Input Shaft	JIS Key (JIS B 1301-1996 plain form) * The key is included.
	Output Shaft Material	Carbon Steel
	Input Shaft Material	Carbon Steel
	Case Material	Aluminum (Frame Size 50: Cast Iron, 1.5 kW Frame Size 40: Aluminum Casting)
Ambient Conditions	Ambient Temperature	-10 °C to 40 °C
	Ambient Humidity	85 % max (No Condensation)
	Altitude	1,000 m max
	Installation Environment	A place free from corrosive gas, explosive gas, and/or vapor. Well ventilated place with no dust.
	Installation Place	Indoors
Paint	Paint Color	Gray
Mounting Direction		No limitations to mounting angle
Performance Table		P.314
Drawings		P.317

H2 Type S-Type Gearboxes

Series		MID
4 Poles Motor Power Class		0.2 kW Class to 2.2 kW Class
Gearbox	Reduction Type	Hypoid Gear and Helical Gear
	Lubrication Type	Grease Lubrication (Maintenance-free)
	Output Shaft	JIS Key (JIS B 1301-1996 plain form) * The key is included.
	Output Shaft Material	Carbon Steel
	Case Material	Aluminum (Frame Size 50: Cast Iron, 1.5 kW Frame Size 40: Aluminum Casting)
Ambient Conditions	Ambient Temperature	-10 °C to 40 °C
	Ambient Humidity	85 % max (No Condensation)
	Altitude	1,000 m max
	Installation Environment	A place free from corrosive gas, explosive gas, and/or vapor. Well ventilated place with no dust.
	Installation Place	Indoors
Paint	Paint Color	Gray
Mounting Direction		No limitations to mounting angle
Performance Table		P.322
Drawings		P.325

Model and Type Codes

Standard Specification Model and Type Codes

H Type Gearmotors/Gearmotors with Brake MINI Series

Mounting Type	Motor Type		Frame Size	Shaft Arrangement		Reduction Ratio		Motor Power	Supply Voltage	Terminal Box	Option	Option Code
HL	M	–	15	L	–	30	–	T25	W	K		
HF	MN	–	22	T	–	450	–	S40		C	X	T6
①	②		③	④		⑤		⑥	⑦	⑧	⑨	⑩

①Mounting Type	HL : Right Angle Shaft Foot Mount		
	HF : Right Angle Shaft Flange Mount (up to frame sizes 22)		
②Motor Type	M : With Motor		
	MN : With Brakemotor		
	MR : Motor with Simple Brake (Option)		
③Frame Size and Output Shaft Diameter	Output Shaft Diameter		
④Shaft Arrangement	Output shaft on the left side when viewed from the input shaft side 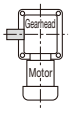	Output shaft on the right side when viewed from the input shaft side 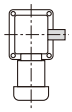	Output shaft on both sides when viewed from the input shaft side 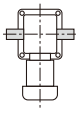
	L	R	T
⑤Reduction Ratio	10: 1/10 to 1800: 1/1800		
⑥Motor Power	T15 : 3-Phase 15 W		
	T25 : 3-Phase 25 W		
	T40 : 3-Phase 40 W		
	T60 : 3-Phase 60 W		
	T90 : 3-Phase 90 W		
	S15 : 1-Phase 15 W		
	S25 : 1-Phase 25 W		
	S40 : 1-Phase 40 W		
	S60 : 1-Phase 60 W		
	S90 : 1-Phase 90 W		
⑦Supply Voltage (High Voltage: Option)	Blank : Standard Voltage 3-Phase: 200 V/50 Hz, 200 V/60 Hz, 220 V/60 Hz 1-Phase: 100 V/50 Hz, 100 V/60 Hz		
	W : High Voltage 3-Phase: 380 V/50 Hz, 400 V/50 Hz, 400 V/60 Hz, 440 V/60 Hz 1-Phase: 200 V/50 Hz, 200 V/60 Hz		
⑧Terminal Box (Option) (Note 1)	Blank : Flying Leads (Standard Type)		
	T : T Type Terminal Box		
	K : K Type Terminal Box		
	C : Terminal Box with Built-in Rectifier for Gearmotor with Brake		
⑨Option	Blank : Standard Specification		
	X : Special Specification Code		
⑩Option Code (Note 2)	Lead Wires/Terminal Box Position Code Please refer to the list of option codes on page 581 for details.		

Note 1: When using an inverter for a C type terminal box, be sure to designate an AC switching (A) connection.
Please refer to page 591 for details.
Note 2: The option code will not be shown in the nomenclature on the nameplate. But it will be shown in the Option code row of the nameplate.

H2 Type Gearmotors/Gearmotors with Brake MID Series [3-Phase]

Gearhead Type					Motor Type							Brake Specifications	Option	
Mounting Type	Frame Size	Shaft Arrangement	Reduction Ratio		Motor Series	Motor Specifications	Motor Power	Number of Phases	Supply Voltage	Standards	Terminal Box	Brake	Option	Option Code
H2F	22	L	5	–	M	M	01	T	N	N	T	N		
H2L	32	R	15	–	M	R	08	T	W	N	T	B4	X	AA
H2L	50	T	120	–	M	R	15	T	K	N	T	B2	X	T9HZ
①	②	③	④		⑤	⑥	⑦	⑧	⑨	⑩	⑪	⑫	⑬	⑭

①Mounting Type	H2L : Right Angle Shaft Foot Mount		
	H2F : Right Angle Shaft Flange Mount		
②Frame Size and Output Shaft Diameter	Output Shaft Diameter		
③Shaft Arrangement	Viewing from the input Shaft (↑), the Output shaft would be on the left side	Viewing from the input Shaft (↑), the Output shaft would be on the right side	Viewing from the input Shaft(↑), the Output shaft would be on the both sides
	L	R	T
④Reduction Ratio	5: 1/5 to 15X: 1/1500		
⑤Motor Type	M : Standard Induction Motor (IP40 or IP44)		
⑥Motor Specifications (Note 1)	M : IE1 Efficiency Ins. F (0.1 kW) IE2 Efficiency Ins. F (0.2 kW to 0.4 kW)		
	R : IE3 Efficiency Ins. F (0.75 kW to 2.2 kW)		
⑦Motor Power	01 : 0.1 kW		
	02 : 0.2 kW		
	04 : 0.4 kW		
	08 : 0.75 kW		
	15 : 1.5 kW		
	22 : 2.2 kW		
⑧Number of Phases	T : 3-Phase		

⑨Supply Voltage (Note 2)		⑫Brake Specifications (Note 3)				
		N	B2	B4	J2	J4
N	: 200 V/50 Hz, 200 V/60 Hz, 220 V/60 Hz	○	○		○	
W	: 380 V/50 Hz, 400 V/50 Hz, 400 V/60 Hz, 440 V/60 Hz	○		○		○
K	: 220 V/60 Hz, 380 V/60 Hz	○	○	○	○	○
C	: 220 V/50 Hz, 230 V/50 Hz, 380 V/50 Hz	○	○	○	○	○
D	: 220 V/50 Hz, 220 V/60 Hz, 380 V/50 Hz, 380 V/60 Hz	○	○	○	○	○
E	: 415 V/50 Hz, 440 V/50 Hz, 480 V/60 Hz	○		○		○
U	: 230 V/60 Hz, 460 V/60 Hz, 400 V/50 Hz	○	○	○	○	○
A	: 208 V/60 Hz, 230 V/60 Hz, 460 V/60 Hz, 400 V/50 Hz	○	○	○	○	○
M	: 575 V/60 Hz	○	○		○	

⑩Standards	N	: UL/CE/CCC
	A	: UL*Supply Voltage: M (575 V/60 Hz) only
⑪Terminal Box (Note 4)	T	: T Type Terminal Box (Steel Plate)
	N	: Flying Leads
⑫Brake Specifications	N	: No Brake
	B2	: 200 V Class Brake
	B4	: 400 V Class Brake
	J2	: 200 V Class Brake with Manual Brake Release Lever (Optional)
	J4	: 400 V Class Brake with Manual Brake Release Lever (Optional)
⑬Option	Blank	: Standard Specification
	X	: Special Specification Code
⑭Option Code (Note 5)	Built-in Rectifier Connection Code For details, please refer to the list of option codes on page 561.	
	Terminal Box Position Code For details, please refer to the list of option codes on page 582.	
	For other option codes, please refer to the list of option codes on page 1012.	

Note 1: For CCC Standard, Three-phase 0.2 kW and Three-phase 0.4 kW are certified under limited duty cycle. Please be cautious upon selecting the product.
Note 2: Refer to the following for the corresponding motor powers for supply voltages.
Supply voltage D: 0.1 kW to 0.75 kW Supply voltage U: 0.75 kW to 2.2 kW Supply voltage A: 0.1 kW to 0.4 kW
Dual voltage is not available for gearmotors with brake and supply the voltage code “K”, “C”, “D”, “U” and “A”.
The motor voltage is limited by the brake specifications.
Note 3: ○ indicates a brake specification that can be manufactured.
Note 4: With regard to the types of flying leads, only supply voltage codes N are covered.
Note 5: The option code will not be shown in the nomenclature on the nameplate. But it will be shown in the Option code row of the nameplate.

Model and Type Codes

H2 Type Gearmotors/Gearmotors with Brake MID Series [1-Phase]

Gearhead Type					Motor Type							Brake Specifications	Option	
Mounting Type	Frame Size	Shaft Arrangement	Reduction Ratio		Motor Type	Motor Specifications	Motor Power	Number of Phases	Supply Voltage	Standards	Terminal Box	Brake	Option	Option Code
H2F	22	L	50	–	M	M	01	S	N	J	A	N		
H2L	28	R	100	–	M	M	02	C	W	J	A	B2		
H2L	40	T	375	–	M	M	04	C	N	J	A	B2	X	T9HZ
①	②	③	④		⑤	⑥	⑦	⑧	⑨	⑩	⑪	⑫	⑬	⑭

①Mounting Type	H2L : Right Angle Shaft Foot Mount		
	H2F : Right Angle Shaft Flange Mount (only frame size 22)		
②Frame Size and Output Shaft Diameter	Output Shaft Diameter		
③Shaft Arrangement	Viewing from the input Shaft (↑), the Output shaft would be on the left side 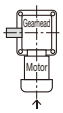	Viewing from the input Shaft (↑), the Output shaft would be on the right side 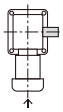	Viewing from the input Shaft(↑), the Output shaft would be on the both sides 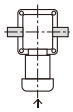
	L	R	T
④Reduction Ratio	5: 1/5 to 15X: 1/1500		
⑤Motor Type	M : Induction Standard (IP44 or IP40)		
⑥Motor Specifications	M : IE1 Efficiency Ins. B Standard Motor		
⑦Motor Power	01 : 0.1 kW		
	02 : 0.2 kW		
	04 : 0.4 kW		
⑧Number of Phases	S : 1-Phase Capacitor Run (Note 1)		
	C : 1-Phase Capacitor Start		
⑨Supply Voltage (Note 2)	N : 100 V/50 Hz, 100 V/60 Hz		
	W : 200 V/50 Hz, 200 V/60 Hz		
⑩Standards	J : No Standards		
⑪Terminal Box	A : A Type Terminal Box (Aluminum)		
⑫Brake Specifications	N : No Brake		
	B2 : 200 V Class Brake		
⑬Option	Blank : Standard Specification		
	X : Special Specification Code		
⑭Option Code (Note 3)	Terminal Box Position Code Please refer to page 584 for details.		

Note 1: 1-phase capacitor run type motors have built-in thermal protectors.
Refer to page 643 for the cautions for use.
Note 2: For voltages/frequencies not listed above, please contact your nearest Sales Office or the CS Center.
Note 3: The option code will not be shown in the nomenclature on the nameplate. But it will be shown in the Option code row of the nameplate.

H Type IP65 Gearmotors/IP65 Gearmotors with Brake MINI Series

Mounting Type	Motor Type		Frame Size	Shaft Arrangement		Reduction Ratio		Motor Power	Option	Option Code
HL	W	–	15	L	–	30	–	T25		
HF	V	–	18	T	–	50	–	S40	X	T6
①	②		③	④		⑤		⑥	⑦	⑧

①Mounting Type	HL : Right Angle Shaft Foot Mount		
	HF : Right Angle Shaft Flange Mount		
②Motor Type	W : With IP65 Motor (Output Shaft Material: Stainless Steel)		
	V : With IP65 Brakemotor (Output Shaft Material: Stainless Steel)		
③Frame Size and Output Shaft Diameter	Output Shaft Diameter		
④Shaft Arrangement	Output shaft on the left side when viewed from the input shaft side 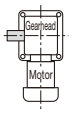	Output shaft on the right side when viewed from the input shaft side 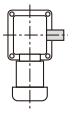	Output shaft on both sides when viewed from the input shaft side 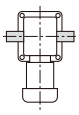
	L	R	T
⑤Reduction Ratio	10: 1/10 to 240: 1/240		
⑥Motor Power and Supply Voltage/ Frequency	T15 : 3-Phase 15 W		
	T25 : 3-Phase 25 W		
	T40 : 3-Phase 40 W		
	T60 : 3-Phase 60 W		
	T90 : 3-Phase 90 W		
	S15 : 1-Phase 15 W		
	S25 : 1-Phase 25 W		
	S40 : 1-Phase 40 W		
	3-Phase : 200 V/50 Hz, 200 V/60 Hz, 220 V/60 Hz 1-Phase : 100 V/50 Hz, 100 V/60 Hz		
⑦Option	Blank : Standard Voltage		
	X : Special Specification Code		
⑧Option Code (Note 1)	Cabtyre Cable Position Code Please refer to the list of option codes on page 581 for details.		

Note 1: The option code will not be shown in the nomenclature on the nameplate. But it will be shown in the Option code row of the nameplate.

Model and Type Codes

H2 Type IP65 Gearmotors/IP65 Gearmotors with Brake MID Series

Gearhead Type					Motor Type							Brake Specifications	Option	
Mounting Type	Frame Size	Shaft Arrangement	Reduction Ratio		Motor Series	Motor Specifications	Motor Power	Number of Phases	Supply Voltage	Standards	Terminal Box	Brake	Option	Option Code
H2F	22	L	5	–	W	M	01	T	N	N	E	N		
H2L	32	M	15	–	W	R	08	T	W	N	E	V4	X	AA
H2L	50	T	120	–	W	R	15	T	K	N	E	V2	X	T9HZ
①	②	③	④		⑤	⑥	⑦	⑧	⑨	⑩	⑪	⑫	⑬	⑭

①Mounting Type	H2L : Right Angle Shaft Foot Mount			
	H2F : Right Angle Shaft Flange Mount			
②Frame Size and Output Shaft Diameter	Output Shaft Diameter			
③Shaft Arrangement	Shaft Arrangement	Viewing from the input Shaft(↑), the Output shaft would be on the left side 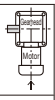	Viewing from the input Shaft(↑), the Output shaft would be on the right side 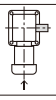	Viewing from the input Shaft(↑), the Output shaft would be on the both sides 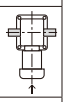
	Material: Carbon Steel	L	R	T
	Material: Stainless Steel	H	M	B
④Reduction Ratio	5: 1/5 to 15X: 1/1500			
⑤Motor Type	W : IP65 Induction Motor			
⑥Motor Specifications (Note 1)	M : IE1 Efficiency Ins. F (0.1 kW) IE2 Efficiency Ins. F (0.2 kW to 0.4 kW)			
	R : IE3 Efficiency Ins. F (0.75 kW to 2.2 kW)			
⑦Motor Power	01 : 0.1 kW			
	02 : 0.2 kW			
	04 : 0.4 kW			
	08 : 0.75 kW			
	15 : 1.5 kW			
	22 : 2.2 kW			
⑧Number of Phases (Note 2)	T : 3-Phase			

⑨Supply Voltage	⑨Supply Voltage (Note 3)	⑫Brake Specifications (Note 4) N	V2	V4
	N : 200 V/50 Hz, 200 V/60 Hz, 220 V/60 Hz	○	○	
	W : 380 V/50 Hz, 400 V/50 Hz, 400 V/60 Hz, 440 V/60 Hz	○		○
	K : 220 V/60 Hz, 380 V/60 Hz	○	○	○
	C : 220 V/50 Hz, 230 V/50 Hz, 380 V/50 Hz	○	○	○
	D : 220 V/50 Hz, 220 V/60 Hz, 380 V/50 Hz, 380 V/60 Hz	○	○	○
	E : 415 V/50 Hz, 440 V/50 Hz, 480 V/60 Hz	○		○
	U : 230 V/60 Hz, 460 V/60 Hz, 400 V/50 Hz	○	○	○
	A : 208 V/60 Hz, 230 V/60 Hz, 460 V/60 Hz, 400 V/50 Hz	○	○	○
	M : 575 V/60 Hz	○	○	

⑩Safety Standards	N	: CE/UL/CCC
	A	: UL*Supply Voltage: M (575 V/60 Hz) only
⑪Terminal Box	E	: E Type Terminal Box (Aluminum)
⑫Brake Specifications (Note 6)	N	: No Brake
	V2	: IP65 200 V Class Brake (Note 5)
	V4	: IP65 400 V Class Brake (Note 5)
⑬Option	Blank	: Standard Specification
	X	: Special Specification Code
⑭Option Code (Note 7)	Built-in Rectifier Connection Code For details, please refer to the list of option codes on page 561.	
	Terminal Box Position Code For details, please refer to the list of option codes on page 582.	
	For other option codes, please refer to the list of option codes on page 1012.	

Note 1: For CCC Standard, Three-phase 0.2 kW and Three-phase 0.4 kW are certified under limited duty cycle. Please be cautious upon selecting the product.
Note 2: Single-phase types are not available.
Note 3: Refer to the following for the corresponding motor powers for supply voltages.
Supply voltage D: 0.1 kW to 0.75 kW Supply voltage U: 0.75 kW to 2.2 kW Supply voltage A: 0.1 kW to 0.4 kW
Dual voltage is not available for gearmotors with brake and supply the voltage code “K”, “C”, “D”, “U” and “A”.
The motor voltage is limited by the brake specifications.
Note 4: ○ indicates a brake specification that can be manufactured.
Note 5: IP65 gearmotors with a brake are not available with motor powers of 1.5 kW and 2.2 kW.
Note 6: The rectifier is included with the product.
Note 7: The option code will not be shown in the nomenclature on the nameplate. But it will be shown in the Option code row of the nameplate.

H2 Type Gearmotors with Clutch/Brake MID Series

Gearhead Type					Motor Type							Brake Specifications	Option	
Mounting Type	Frame Size	Shaft Arrangement	Reduction Ratio		Motor Type	Motor Specifications	Motor Power	Number of Phases	Supply Voltage	Standards	Terminal Box	Brake	Option	Option Code
H2F	22	L	30	–	E	M	02	T	N	J	T	N		
H2L	32	R	100	–	E	M	04	T	W	J	T	N	X	T9HZ
H2L	40	T	160	–	E	R	08	T	W	J	T	N	X	T9HZ
①	②	③	④		⑤	⑥	⑦	⑧	⑨	⑩	⑪	⑫	⑬	⑭

①Mounting Type	H2L : Right Angle Shaft Foot Mount		
	H2F : Right Angle Shaft Flange Mount (only frame size 22)		
②Frame Size and Output Shaft Diameter	Output Shaft Diameter		
③Shaft Arrangement	Viewing from the input Shaft (↑), the Output shaft would be on the left side 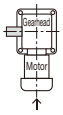	Viewing from the input Shaft (↑), the Output shaft would be on the right side 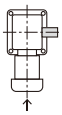	Viewing from the input Shaft(↑), the Output shaft would be on the both sides 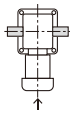
	L	R	T
④Reduction Ratio	5: 1/5 to 240: 1/240		
⑤Motor Type	E : Induction Motor With Clutch/Brake		
⑥Motor Specifications	M : IE2 Efficiency Ins. F (0.2 kW to 0.4 kW)		
	R : IE3 Efficiency Ins. F (0.75 kW)		
⑦Motor Power	02 : 3-Phase 0.2 kW		
	04 : 3-Phase 0.4 kW		
	08 : 3-Phase 0.75 kW		
⑧Number of Phases	T : 3-Phase		
⑨Supply Voltage (Note 1)	N : 200 V/50 Hz, 200 V/60 Hz, 220 V/60 Hz		
	W : 380 V/50 Hz, 400 V/50 Hz, 400 V/60 Hz, 440 V/60 Hz		
⑩Standards	J : No Standards		
⑪Terminal Box	T : T Type Terminal Box (Steel Plate)		
⑫Brake Specifications	N : No Brake (With Clutch/Brake)		
⑬Option	Blank : Standard Specification		
	X : Special Specification Code		
⑭Option Code (Note 2)	Terminal Box Position Code Please refer to page 584 for details.		

Note 1: For voltages/frequencies not listed above, please contact your nearest Sales Office or the CS Center.
Note 2: The option code will not be shown in the nomenclature on the nameplate. But it will be shown in the Option code row of the nameplate.
Note 3: Please avoid using gearmotors with clutch/brake in vertical operation (lifting). There is a danger of falling during a power outage.

H Type Speed Control Gearmotors MINI Series

Mounting Type	Motor Type		Frame Size	Shaft Arrangement		Reduction Ratio		Motor Power	Supply Voltage	Terminal Box	Option	Option Code
HL	U	–	15	L	–	30	–	S25				
HF	P	–	22	T	–	450	–	S40	W	C	X	T6
①	②		③	④		⑤		⑥	⑦	⑧	⑨	⑩

①Mounting Type	HL : Right Angle Shaft Foot Mount		
	HF : Right Angle Shaft Flange Mount (up to frame size 22)		
②Motor Type	U : U Type with Speed Control Motor (Controller Set)		
	P : P Type with Speed Control Motor (Controller: Sold Separately)		
③Frame Size and Output Shaft Diameter	Output Shaft Diameter		
④Shaft Arrangement	Output shaft on the left side when viewed from the input shaft side 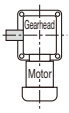	Output shaft on the right side when viewed from the input shaft side 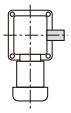	Output shaft on both sides when viewed from the input shaft side 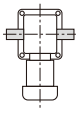
	L	R	T
⑤Reduction Ratio	10: 1/10 to 1800: 1/1800		
⑥Motor Power	S15 : 1-Phase 15 W		
	S25 : 1-Phase 25 W		
	S40 : 1-Phase 40 W		
	S60 : 1-Phase 60 W		
	S90 : 1-Phase 90 W		
⑦Supply Voltage (High Voltage (200 V Class): Option)	Blank : Standard Voltage 1-Phase 100 V/50 Hz, 100 V/60 Hz		
	W : High Voltage (200 V Class) 1-Phase 200 V/50 Hz, 200 V/60 Hz		
⑧Terminal Box (Option) (Note 1)	Blank : Flying Leads (Standard Type)		
	C : Terminal Box for P Type		
⑨Option	Blank : Standard Specification		
	X : Special Specification Code		
⑩Option Code (Note 2)	Lead Wires/Terminal Box Position Code Please refer to the list of option codes on page 581 for details.		

Note 1: Please refer to page 639 for the specifications of terminal boxes.
Note 2: The option code will not be shown in the nomenclature on the nameplate. But it will be shown in the Option code row of the nameplate.

Controller

■ Type Code

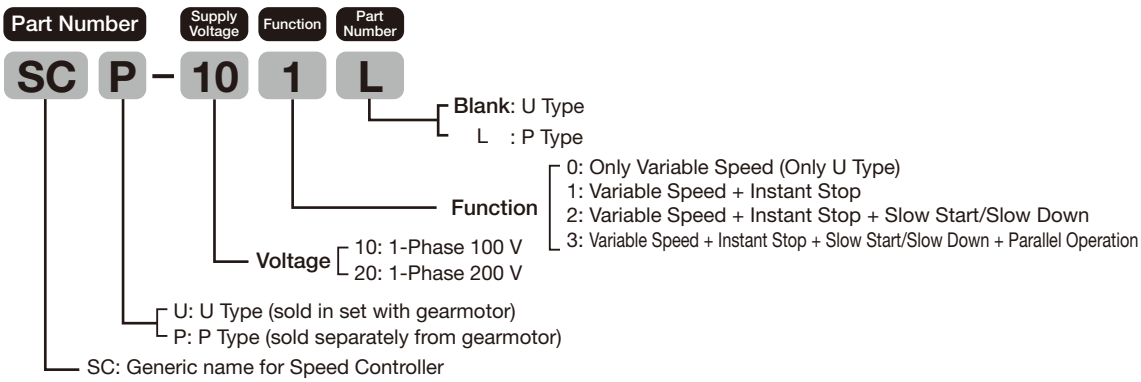

H2 Type Gearboxes (Double Shaft Type) MID Series

Mounting Type	Motor Type		Frame Size	Shaft Arrangement		Reduction Ratio		Motor Power Class	Option	Terminal Box	Option	Option Code
H2L		–	32	L	–	200	–	040				
H2F		–	22	T	–	50	–	020			X	
①	②		③	④		⑤		⑥	⑦	⑧	⑨	⑩

①Mounting Type	H2L : Right Angle Shaft Foot Mount		
	H2F : Right Angle Shaft Flange Mount (only frame size 22)		
②Motor Type	Blank : Without Motor (Double Shaft Type)		
③Frame Size and Output Shaft Diameter	Output Shaft Diameter		
④Shaft Arrangement	Viewing from the input Shaft (↑), the Output shaft would be on the left side 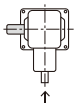	Viewing from the input Shaft (↑), the Output shaft would be on the right side 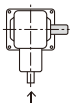	Viewing from the input Shaft(↑), the Output shaft would be on the both sides 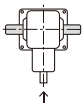
	L	R	T
⑤Reduction Ratio	5: 1/5 to 1500: 1/1500		
⑥Motor Designation and Power	020 : 0.2 kW Class		
	040 : 0.4 kW Class		
	075 : 0.75 kW Class		
	150 : 1.5 kW Class		
	220 : 2.2 kW Class		
⑦ ⑧Options	Blank : Standard Specification There is no applicable option.		
⑨Option	Blank : Standard Specification		
	X : Special Specification Code		
⑩Option Code (Note 1)	Blank : Standard Specification		

Note 1: The option code will not be shown in the nomenclature on the nameplate. But it will be shown in the Option code row of the nameplate.

Model and Type Codes

H2 Type S-Type Gearboxes MID Series

Mounting Type	Motor Type		Frame Size	Shaft Arrangement		Reduction Ratio		Motor Power Class	Option	Terminal Box	Option
H2L	S	–	32	L	–	200	–	040			
H2F	S	–	22	T	–	50	–	020			X
①	②		③	④		⑤		⑥	⑦	⑧	⑨

①Mounting Type	H2L : Right Angle Shaft Foot Mount		
	H2F : Right Angle Shaft Flange Mount (only frame size 22)		
②Motor Type	S : Type That Can be Equipped with Designated Motor (S-Type)		
③Frame Size and Output Shaft Diameter	Output Shaft Diameter		
④Shaft Arrangement	Viewing from the input Shaft (↑), the Output shaft would be on the left side 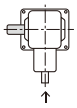	Viewing from the input Shaft (↑), the Output shaft would be on the right side 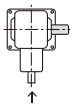	Viewing from the input Shaft(↑), the Output shaft would be on the both sides 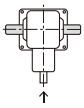
	L	R	T
⑤Reduction Ratio	5: 1/5 to 1500: 1/1500		
⑥Motor Designation and Power	020 : 0.2 kW Class		
	040 : 0.4 kW Class		
	075 : 0.75 kW Class		
	150 : 1.5 kW Class		
	220 : 2.2 kW Class		
⑦ ⑧Options	Blank : Standard Specification		
⑨Option	Blank : Standard Specification		
	X : Special Specification Code		

Standard Model Lineup

H Type Gearmotors/Gearmotors with Brake MINI Series

Part Number	4 Poles Motor Power	Frame Size	Shaft Arrangement	Reduction Ratio
Gearmotors / Gearmotors with Brake	3-Phase 15 W / 1-Phase 15 W	15	L, R, T	1/10, 1/15, 1/20, 1/25, 1/30, 1/40, 1/50, 1/60, 1/80, 1/100, 1/120, 1/160, 1/200, 1/240
		22	L, R, T	1/300, 1/375, 1/450, 1/600, 1/750, 1/900, 1/1200, 1/1500, 1/1800
	3-Phase 25 W / 1-Phase 25 W	15	L, R, T	1/10, 1/15, 1/20, 1/25, 1/30, 1/40, 1/50, 1/60, 1/80, 1/100, 1/120, 1/160, 1/200, 1/240
		22	L, R, T	1/300, 1/375, 1/450, 1/600, 1/750, 1/900
		28	L, R, T	1/1200, 1/1500, 1/1800
	3-Phase 40 W / 1-Phase 40 W	15	L, R, T	1/10, 1/15, 1/20, 1/25, 1/30, 1/40, 1/50, 1/60, 1/80, 1/100, 1/120
		18	L, R, T	1/160, 1/200, 1/240
		22	L, R, T	1/300, 1/375, 1/450
		28	L, R, T	1/600, 1/750, 1/900
		32	L, R, T	1/1200, 1/1500, 1/1800
	3-Phase 60 W / 1-Phase 60 W	(Note 2) 15	L, R, T	1/10, 1/15, 1/20, 1/25, 1/30, 1/40, 1/50, 1/60
		18	L, R, T	1/80, 1/100, 1/120, 1/160, 1/200, 1/240
		22	L, R, T	1/300, 1/375, 1/450
		28	L, R, T	1/600, 1/750, 1/900
		32	L, R, T	1/1200, 1/1500, 1/1800
	3-Phase 90 W / 1-Phase 90 W	18	L, R, T	1/10, 1/15, 1/20, 1/25, 1/30, 1/40, 1/50, 1/60, 1/80, 1/100, 1/120, 1/160, 1/200, 1/240
		28	L, R, T	1/300, 1/375, 1/450
		32	L, R, T	1/600, 1/750, 1/900
		40	L, R, T	1/1200, 1/1500, 1/1800

Note 1: Please note that mounting type HF is available only for frame sizes 15 to 22.
Note 2: The frame size for types other than three-phase standard voltage types is 18. The frame size for all single-phase types is 18.
Note 3: ⬭ indicates a limited torque type. Please make sure to check the allowable output shaft torque in the performance table.

H2 Type Gearmotors/Gearmotors with Brake MID Series

Part Number	4 Poles Motor Power	Frame Size	Shaft Arrangement	Reduction Ratio
Gearmotors / Gearmotors with Brake / Brakemotors with Manual Release	3-Phase 0.1 kW	22 (Note 1)	L, R, T	1/5, 1/10, 1/15, 1/20, 1/25, 1/30, 1/40, 1/50, 1/60, 1/80, 1/100, 1/120, 1/160, 1/200, **1/240**
		28	L, R, T	1/300, 1/375, 1/450
		32	L, R, T	1/600, 1/750, 1/900, **1/1200**, **1/1500**
	3-Phase 0.2 kW	22 (Note 1)	L, R, T	1/5, 1/10, 1/15, 1/20, 1/25, 1/30, 1/40, 1/50, 1/60
		28	L, R, T	1/80, 1/100, 1/120, 1/160, 1/200, 1/240
		32	L, R, T	1/300, 1/375, 1/450
		40	L, R, T	1/600, 1/750, **1/900**, **1/1200**, **1/1500**
	3-Phase 0.4 kW	28	L, R, T	1/5, 1/10, 1/15, 1/20, 1/25, 1/30, 1/40, 1/50, 1/60
		32	L, R, T	1/80, 1/100, 1/120, 1/160, 1/200, **1/240**
		40	L, R, T	1/300, 1/375, **1/450**
		50	L, R, T	1/600, **1/750**, **1/900**, **1/1200**, **1/1500**
	3-Phase 0.75 kW	32	L, R, T	1/5, 1/10, 1/15, 1/20, 1/25, 1/30, 1/40, 1/50, 1/60
		40	L, R, T	1/80, 1/100, 1/120, 1/160, **1/200**, **1/240**
		50	L, R, T	1/300, **1/375**, **1/450**
	3-Phase 1.5 kW	40	L, R, T	1/5, 1/10, 1/15, 1/20, 1/25, 1/30, 1/40, 1/50, 1/60
		50	L, R, T	1/80, 1/100, 1/120, **1/160**, **1/200**, **1/240**
	3-Phase 2.2 kW	50	L, R, T	1/5, 1/10, 1/15, 1/20, 1/25, 1/30, 1/40, 1/50, 1/60, 1/80, 1/100, **1/120**

Note 1: The flange mount type (H2F) is also available for frame size 22 only.
Note 2: ▭ indicates a limited torque type. Please make sure to check the allowable output shaft torque in the performance table.

H2 Type Gearmotors/Gearmotors with Brake MID Series

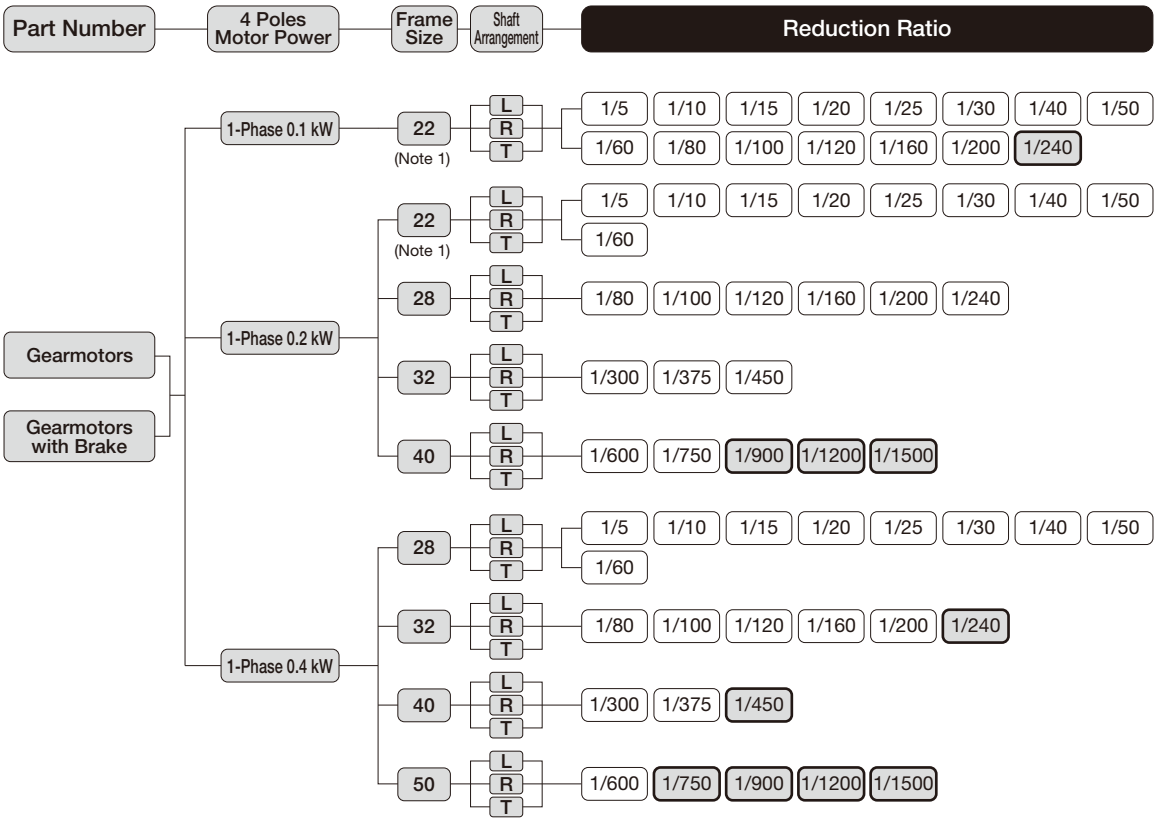

Note 1: The flange mount type (H2F) is also available for frame size 22 only.
Note 2: ▭ indicates a limited torque type. Please make sure to check the allowable output shaft torque in the performance table.

H Type IP65 Gearmotors/IP65 Gearmotors with Brake MINI Series

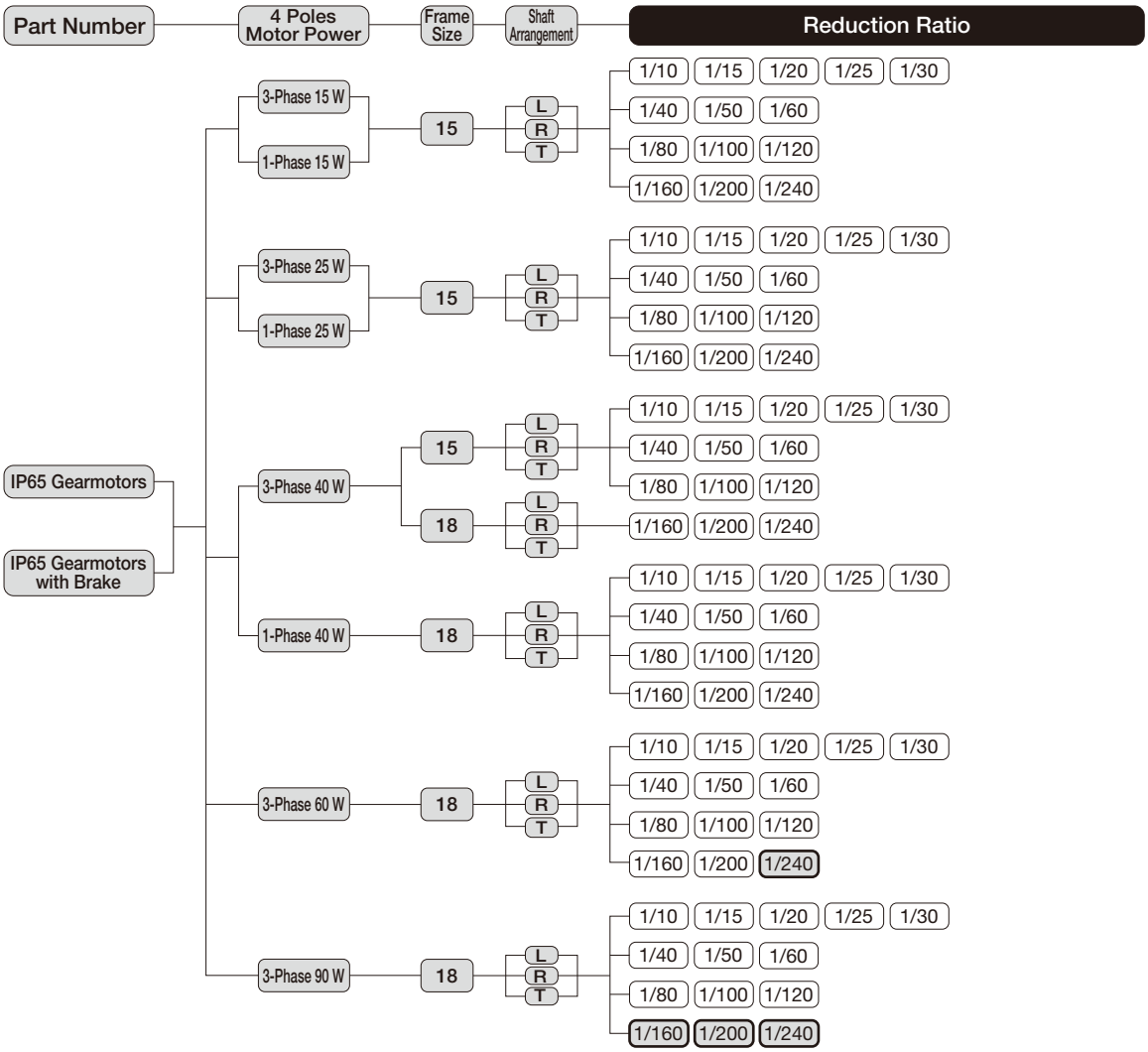

Note 1: Single-phase types are not available for 60 W and 90 W.
Note 2: ▭ indicates a limited torque type. Please make sure to check the allowable output shaft torque in the performance table.

H2 Type IP65 Gearmotors/IP65 Gearmotors with Brake MID Series

Part Number	4 Poles Motor Power	Frame Size	Shaft Arrangement	Reduction Ratio
IP65 Gearmotors / IP65 Gearmotors with Brake	3-Phase 0.1 kW	22 (Note 1)	L H R M T B	1/5 1/10 1/15 1/20 1/25 1/30 1/40 1/50 1/60 1/80 1/100 1/120 1/160 1/200 **1/240**
		28	L H R M T B	1/300 1/375 1/450
		32	L H R M T B	1/600 1/750 1/900 **1/1200** **1/1500**
	3-Phase 0.2 kW	22 (Note 1)	L H R M T B	1/5 1/10 1/15 1/20 1/25 1/30 1/40 1/50 1/60
		28	L H R M T B	1/80 1/100 1/120 1/160 1/200 1/240
		32	L H R M T B	1/300 1/375 1/450
		40	L H R M T B	1/600 1/750 **1/900** **1/1200** **1/1500**
	3-Phase 0.4 kW	28	L H R M T B	1/5 1/10 1/15 1/20 1/25 1/30 1/40 1/50 1/60
		32	L H R M T B	1/80 1/100 1/120 1/160 1/200 **1/240**
		40	L H R M T B	1/300 1/375 **1/450**
		50	L H R M T B	1/600 **1/750** **1/900** **1/1200** **1/1500**
	3-Phase 0.75 kW	32	L H R M T B	1/5 1/10 1/15 1/20 1/25 1/30 1/40 1/50 1/60
		40	L H R M T B	1/80 1/100 1/120 1/160 **1/200** **1/240**
		50	L H R M T B	1/300 **1/375** **1/450**
	(Note 2) 3-Phase 1.5 kW	40	L H R M T B	1/5 1/10 1/15 1/20 1/25 1/30 1/40 1/50 1/60
		50	L H R M T B	1/80 1/100 1/120 **1/160** **1/200** **1/240**
	(Note 2) 3-Phase 2.2 kW	50	L H R M T B	1/5 1/10 1/15 1/20 1/25 1/30 1/40 1/50 1/60 1/80 1/100 **1/120**

Note 1: The flange mount type (H2F) is also available for frame size 22 only.
Note 2: IP65 gearmotors with a brake are not available with motor powers of 1.5 kW and 2.2 kW.
Note 3: ▭ indicates a limited torque type. Please make sure to check the allowable output shaft torque in the performance table.

H2 Type Gearmotors with Clutch/Brake MID Series

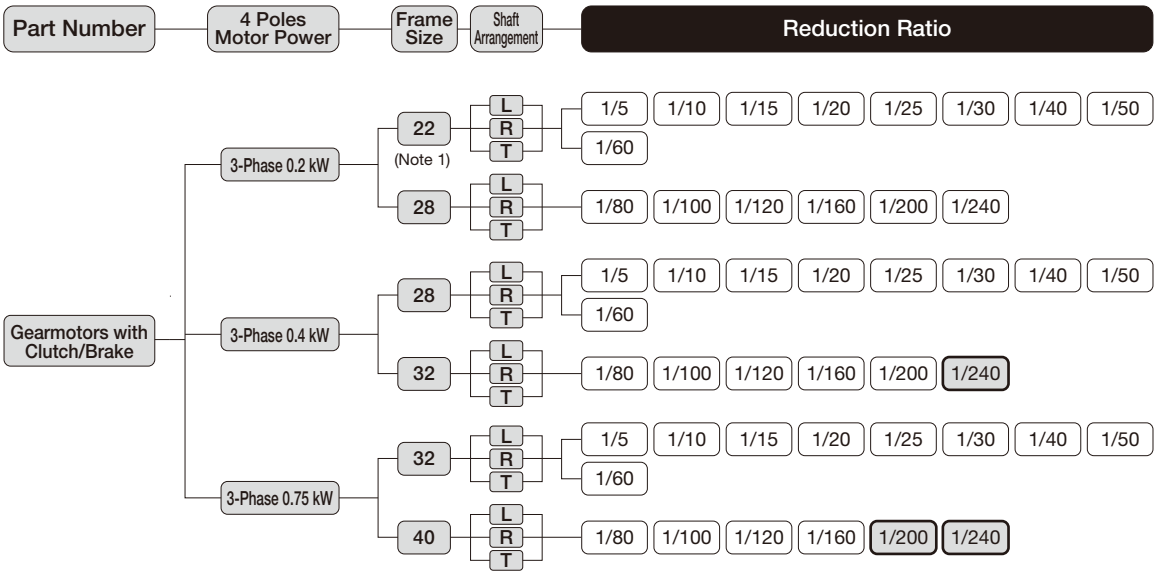

Note 1: The flange mount type (H2F) is also available for frame size 22 only.
Note 2: ▭ indicates a limited torque type. Please make sure to check the allowable output shaft torque in the performance table.
Note 3: Single-phase motors with a clutch/brake are not available.

H Type Speed Control Gearmotors MINI Series

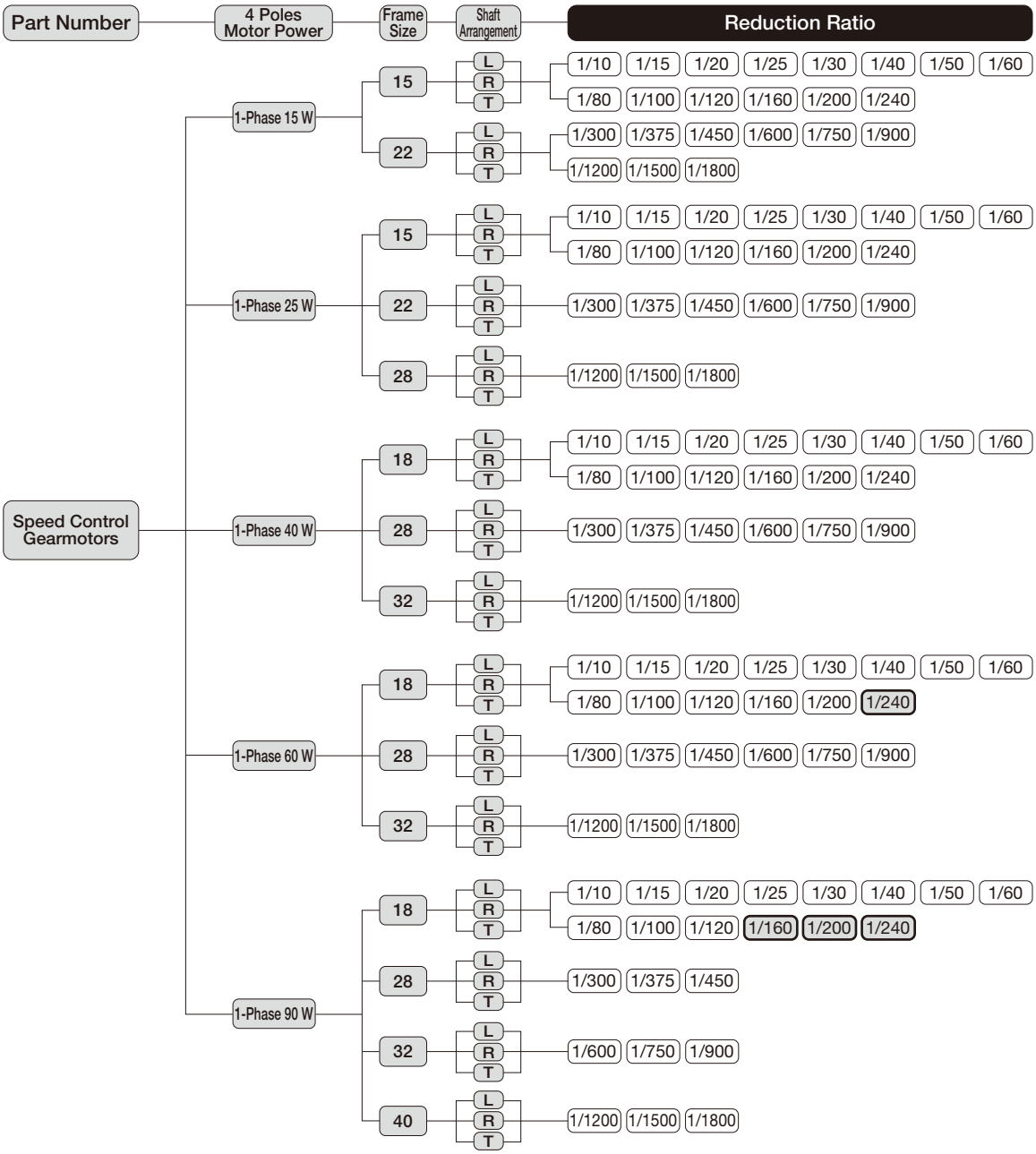

Note 1: Please note that mounting type HF is available only for frame sizes 15 to 22.
Note 2: ▭ indicates a limited torque type. Please make sure to check the allowable output shaft torque in the performance table.

H2 Type Gearboxes (Double Shaft Type) MID Series

Part Number	Motor Power Class	Frame Size	Shaft Arrangement	Reduction Ratio
Gearboxes (Double Shaft Type)	0.2 kW	22 (Note 1)	L, R, T	1/5, 1/10, 1/15, 1/20, 1/25, 1/30, 1/40, 1/50, 1/60
		28	L, R, T	1/80, 1/100, 1/120, 1/160, 1/200, 1/240
		32	L, R, T	1/300, 1/375, 1/450
		40	L, R, T	1/600, 1/750, **1/900**, **1/1200**, **1/1500**
	0.4 kW	28	L, R, T	1/5, 1/10, 1/15, 1/20, 1/25, 1/30, 1/40, 1/50, 1/60
		32	L, R, T	1/80, 1/100, 1/120, 1/160, 1/200, **1/240**
		40	L, R, T	1/300, 1/375, **1/450**
		50	L, R, T	1/600, **1/750**, **1/900**, **1/1200**, **1/1500**
	0.75 kW	32	L, R, T	1/5, 1/10, 1/15, 1/20, 1/25, 1/30, 1/40, 1/50, 1/60
		40	L, R, T	1/80, 1/100, 1/120, 1/160, **1/200**, **1/240**
		50	L, R, T	1/300, **1/375**, **1/450**
	1.5 kW	40	L, R, T	1/5, 1/10, 1/15, 1/20, 1/25, 1/30, 1/40, 1/50, 1/60
		50	L, R, T	1/80, 1/100, 1/120, **1/160**, **1/200**, **1/240**
	2.2 kW	50	L, R, T	1/5, 1/10, 1/15, 1/20, 1/25, 1/30, 1/40, 1/50, 1/60, 1/80, 1/100, **1/120**

Note 1: The flange mount type (H2F) is also available for frame size 22 only.
Note 2: ▭ indicates a limited torque type. Please make sure to check the allowable output shaft torque in the performance table.

H2 Type S-Type Gearboxes MID Series

Part Number	Motor Power Class	Frame Size	Shaft Arrangement	Reduction Ratio
S-Type Gearboxes	0.2 kW	22 (Note 1)	L, R, T	1/5, 1/10, 1/15, 1/20, 1/25, 1/30, 1/40, 1/50, 1/60
		28	L, R, T	1/80, 1/100, 1/120, 1/160, 1/200, 1/240
		32	L, R, T	1/300, 1/375, 1/450
		40	L, R, T	1/600, 1/750, **1/900**, **1/1200**, **1/1500**
	0.4 kW	28	L, R, T	1/5, 1/10, 1/15, 1/20, 1/25, 1/30, 1/40, 1/50, 1/60
		32	L, R, T	1/80, 1/100, 1/120, 1/160, 1/200, **1/240**
		40	L, R, T	1/300, 1/375, **1/450**
		50	L, R, T	1/600, **1/750**, **1/900**, **1/1200**, **1/1500**
	0.75 kW	32	L, R, T	1/5, 1/10, 1/15, 1/20, 1/25, 1/30, 1/40, 1/50, 1/60
		40	L, R, T	1/80, 1/100, 1/120, 1/160, **1/200**, **1/240**
		50	L, R, T	1/300, **1/375**, **1/450**
	1.5 kW	40	L, R, T	1/5, 1/10, 1/15, 1/20, 1/25, 1/30, 1/40, 1/50, 1/60
		50	L, R, T	1/80, 1/100, 1/120, **1/160**, **1/200**, **1/240**
	2.2 kW	50	L, R, T	1/5, 1/10, 1/15, 1/20, 1/25, 1/30, 1/40, 1/50, 1/60, 1/80, 1/100, **1/120**

Note 1: The flange mount type (H2F) is also available for frame size 22 only.
Note 2: ▭ indicates a limited torque type. Please make sure to check the allowable output shaft torque in the performance table.

MEMO

1. Gearmotors Gearmotors with Brake

1-1. Motor Characteristics Table

H Type 3-Phase Standard Voltage

Series	Power (W)	Voltage (V)	Frequency (Hz)	Frame Size	Rated Current (A)	Rated Speed (r/min)	Startup Current (A)
MINI	15	200/200/220	50/60/60	15	0.14/0.13/0.13	1350/1550/1600	0.30/0.28/0.31
				22	0.14/0.13/0.13	1350/1550/1600	0.30/0.28/0.31
	25	200/200/220	50/60/60	15	0.21/0.19/0.19	1350/1550/1600	0.44/0.42/0.46
				22	0.21/0.19/0.19	1350/1550/1600	0.44/0.42/0.46
				28	0.18/0.17/0.17	1350/1550/1600	0.43/0.41/0.46
	40	200/200/220	50/60/60	15	0.29/0.27/0.27	1350/1550/1600	0.67/0.62/0.68
				18	0.27/0.26/0.26	1350/1550/1550	0.73/0.69/0.76
				22	0.29/0.27/0.27	1350/1550/1600	0.67/0.62/0.68
				28	0.27/0.26/0.26	1350/1550/1550	0.73/0.69/0.76
				32	0.27/0.26/0.26	1350/1550/1550	0.73/0.69/0.76
	60	200/200/220	50/60/60	15	0.42/0.39/0.39	1350/1550/1550	0.94/0.86/1.00
				18	0.40/0.36/0.36	1350/1550/1600	1.04/0.97/1.07
				22	0.42/0.39/0.39	1350/1550/1550	0.94/0.86/1.00
				28	0.40/0.36/0.36	1350/1550/1600	1.04/0.97/1.07
				32	0.40/0.36/0.36	1350/1550/1600	1.04/0.97/1.07
	90	200/200/220	50/60/60	18	0.51/0.48/0.48	1350/1550/1550	1.42/1.36/1.49
				28	0.51/0.48/0.48	1350/1550/1550	1.42/1.36/1.49
				32	0.51/0.48/0.48	1350/1550/1550	1.42/1.36/1.49
				40	0.47/0.47/0.47	1350/1550/1600	1.59/1.51/1.66

The rated current in the motor characteristics table and performance table is the current data for the motor operating without a gearbox.
With regard to gearmotors with a brake, it is necessary to consider the current value flowing through the brake as needed.
For more details, please contact your nearest Sales Office or the CS Center.

H Type 3-Phase High Voltage (400 V Class)

Series	Power (W)	Voltage (V)	Frequency (Hz)	Frame Size	Rated Current (A)	Rated Speed (r/min)	Startup Current (A)
MINI	15	380/400/400/440	50/50/60/60	15	0.11/0.12/0.10/0.11	1400/1400/1700/1700	0.26/0.28/0.26/0.29
				22	0.11/0.12/0.10/0.11	1400/1400/1700/1700	0.26/0.28/0.26/0.29
	25	380/400/400/440	50/50/60/60	15	0.11/0.12/0.11/0.12	1350/1400/1600/1650	0.26/0.28/0.26/0.29
				22	0.11/0.12/0.11/0.12	1350/1400/1600/1650	0.26/0.28/0.26/0.29
				28	0.09/0.09/0.09/0.09	1300/1350/1550/1600	0.20/0.21/0.20/0.22
	40	380/400/400/440	50/50/60/60	15	0.14/0.14/0.14/0.14	1300/1350/1550/1600	0.30/0.32/0.30/0.33
				18	0.13/0.14/0.13/0.14	1300/1350/1550/1600	0.33/0.35/0.33/0.37
				22	0.14/0.14/0.14/0.14	1300/1350/1550/1600	0.30/0.32/0.30/0.33
				28	0.13/0.14/0.13/0.14	1300/1350/1550/1600	0.33/0.35/0.33/0.37
				32	0.13/0.14/0.13/0.14	1300/1350/1550/1600	0.33/0.35/0.33/0.37
	60	380/400/400/440	50/50/60/60	18	0.17/0.17/0.17/0.17	1300/1350/1550/1600	0.43/0.45/0.43/0.47
				22	0.20/0.20/0.20/0.20	1250/1300/1500/1550	0.38/0.40/0.38/0.41
				28	0.17/0.17/0.17/0.17	1300/1350/1550/1600	0.43/0.45/0.43/0.47
				32	0.17/0.17/0.17/0.17	1300/1350/1550/1600	0.43/0.45/0.43/0.47
	90	380/400/400/440	50/50/60/60	18	0.26/0.26/0.26/0.26	1300/1350/1550/1600	0.70/0.74/0.69/0.77
				28	0.26/0.26/0.26/0.26	1300/1350/1550/1600	0.70/0.74/0.69/0.77
				32	0.26/0.26/0.26/0.26	1300/1350/1550/1600	0.70/0.74/0.69/0.77
				40	0.23/0.23/0.24/0.24	1350/1350/1600/1650	0.73/0.78/0.74/0.81

The rated current in the motor characteristics table and performance table is the current data for the motor operating without a gearbox.
With regard to gearmotors with a brake, it is necessary to consider the current value flowing through the brake as needed.
For more details, please contact your nearest Sales Office or the CS Center.

1-1. Motor Characteristics Table

H Type 1-Phase Standard Voltage

Series	Power (W)	Voltage (V)	Frequency (Hz)	Frame Size	Rated Current (A)	Rated Speed (r/min)	Startup Current (A)	Capacitor (μF)
MINI	15	100/100	50/60	15	0.39/0.35	1350/1650	0.72/0.67	5
				22	0.39/0.35	1350/1650	0.72/0.67	5
	25	100/100	50/60	15	0.48/0.48	1350/1600	0.86/0.80	7
				22	0.48/0.48	1350/1600	0.86/0.80	7
				28	0.44/0.45	1350/1650	1.00/0.92	7
	40	100/100	50/60	15	0.67/0.80	1400/1650	1.26/1.23	12
				18	0.61/0.66	1350/1650	1.43/1.36	10
				22	0.67/0.80	1400/1650	1.26/1.23	12
				28	0.61/0.66	1350/1650	1.43/1.36	10
				32	0.61/0.66	1350/1650	1.43/1.36	10
	60	100/100	50/60	18	0.90/1.00	1350/1600	2.11/1.98	15
				22	0.90/1.10	1300/1500	1.33/1.34	15
				28	0.90/1.00	1350/1600	2.11/1.98	15
				32	0.90/1.00	1350/1600	2.11/1.98	15
	90	100/100	50/60	18	1.30/1.40	1350/1600	2.89/2.68	20
				28	1.30/1.40	1350/1600	2.89/2.68	20
				32	1.30/1.40	1350/1600	2.89/2.68	20
				40	1.20/1.40	1350/1600	3.27/3.04	20

The rated current in the motor characteristics table and performance table is the current data for the motor operating without a gearbox.
With regard to gearmotors with a brake, it is necessary to consider the current value flowing through the brake as needed.
For more details, please contact your nearest Sales Office or the CS Center.

H Type 1-Phase High Voltage (200 V Class)

Series	Power (W)	Voltage (V)	Frequency (Hz)	Frame Size	Rated Current (A)	Rated Speed (r/min)	Startup Current (A)	Capacitor (μF)
MINI	15	200/200	50/60	15	0.21/0.19	1350/1650	0.35/0.33	1.2
				22	0.21/0.19	1350/1650	0.35/0.33	1.2
	25	200/200	50/60	15	0.26/0.25	1350/1600	0.47/0.44	1.7
				22	0.26/0.25	1350/1600	0.47/0.44	1.7
				28	0.23/0.24	1350/1650	0.46/0.45	1.7
	40	200/200	50/60	15	0.34/0.33	1350/1600	0.66/0.60	2.5
				18	0.29/0.34	1350/1600	0.64/0.61	2.5
				22	0.34/0.33	1350/1600	0.66/0.60	2.5
				28	0.29/0.34	1350/1600	0.64/0.61	2.5
				32	0.29/0.34	1350/1600	0.64/0.61	2.5
	60	200/200	50/60	18	0.45/0.48	1350/1600	1.06/1.00	3.5
				22	0.43/0.50	1300/1500	0.67/0.64	3.5
				28	0.45/0.48	1350/1600	1.06/1.00	3.5
				32	0.45/0.48	1350/1600	1.06/1.00	3.5
	90	200/200	50/60	18	0.65/0.66	1350/1600	1.44/1.35	5
				28	0.65/0.66	1350/1600	1.44/1.35	5
				32	0.65/0.66	1350/1600	1.44/1.35	5
				40	0.59/0.65	1400/1650	1.67/1.58	5

The rated current in the motor characteristics table and performance table is the current data for the motor operating without a gearbox.
With regard to gearmotors with a brake, it is necessary to consider the current value flowing through the brake as needed.
For more details, please contact your nearest Sales Office or the CS Center.

H2 Type 3-Phase Standard Voltage/High Voltage (400 V Class)/Special Voltage

Series	Power	Power Supply/ Certification Codes	Voltage (V)	Frequency (Hz)	Rated Current (A)	Startup Current (A)	Rated Speed (r/min)
MID	0.1 kW	NN	200/200/220	50/60/60	0.61/0.54/0.54	2.39/2.27/2.52	1410/1690/1710
		WN	380/400/400/440	50/50/60/60	0.31/0.31/0.28/0.28	1.12/1.18/1.12/1.22	1400/1410/1690/1720
		KN	220/380	60/60	0.52/0.30	1.90/1.10	1680/1680
		CN	220/230/380	50/50/50	0.55/0.54/0.31	1.94/2.03/1.12	1400/1410/1400
		DN	220/220/380/380	50/60/50/60	0.55/0.52/0.31/0.30	1.94/1.90/1.12/1.10	1400/1680/1400/1680
		EN	415/440/480	50/50/60	0.30/0.29/0.26	1.06/1.12/1.17	1390/1420/1720
		AN	208/230/460/400	60/60/60/50	0.54/0.57/0.29/0.31	2.35/2.62/1.26/1.21	1690/1730/1730/1410
		MA	575	60	0.20	0.87	1700
	0.2 kW IE2	NN	200/200/220	50/60/60	1.1/1.0/1.0	4.70/4.35/4.85	1400/1680/1700
		WN	380/400/400/440	50/50/60/60	0.56/0.56/0.50/0.50	2.29/2.38/2.29/2.48	1390/1400/1680/1710
		KN	220/380	60/60	0.93/0.52	3.70/2.20	1680/1680
		CN	220/230/380	50/50/50	0.99/0.98/0.56	3.97/4.15/2.29	1400/1410/1390
		DN	220/220/380/380	50/60/50/60	0.99/0.93/0.56/0.52	3.97/3.70/2.29/2.20	1400/1680/1390/1680
		EN	415/440/480	50/50/60	0.50/0.50/0.45	1.75/1.86/2.00	1370/1400/1700
		AN	208/230/460/400	60/60/60/50	1.0/1.0/0.50/0.56	4.78/5.16/2.56/2.44	1680/1720/1720/1400
		MA	575	60	0.40	1.78	1710
	0.4 kW IE2	NN	200/200/220	50/60/60	2.1/1.8/1.8	9.60/8.54/9.21	1400/1680/1700
		WN	380/400/400/440	50/50/60/60	1.0/1.0/0.9/0.9	4.43/4.64/4.24/4.85	1390/1400/1680/1710
		KN	220/380	60/60	1.7/1.0	7.10/4.09	1670/1670
		CN	220/230/380	50/50/50	1.8/1.8/1.0	7.63/8.04/4.43	1390/1400/1390
		DN	220/220/380/380	50/60/50/60	1.8/1.7/1.0/1.0	7.63/7.10/4.43/4.09	1390/1670/1390/1670
		EN	415/440/480	50/50/60	0.96/0.95/0.82	4.45/4.56/4.52	1390/1410/1680
		AN	208/230/460/400	60/60/60/50	1.8/1.8/0.9/1.0	9.21/9.82/5.06/4.62	1680/1720/1720/1400
		MA	575	60	0.68	3.94	1700
	0.75 kW IE3	NN	200/200/220	50/60/60	3.5/3.2/3.1	21.8/19.0/21.1	1450/1740/1750
		WN	380/400/400/440	50/50/60/60	1.73/1.72/1.58/1.54	10.2/10.8/9.8/10.7	1440/1450/1740/1750
		KN	220/380	60/60	2.9/1.7	16.9/9.8	1740/1740
		CN	220/230/380	50/50/50	3.0/3.0/1.7	17.8/18.7/10.3	1450/1450/1440
		DN	220/220/380/380	50/60/50/60	3.1/2.9/1.8/1.7	19.3/16.9/11.2/9.8	1450/1740/1450/1740
		EN	415/440/480	50/50/60	1.54/1.52/1.36	8.6/9.3/9.0	1440/1450/1750
		UN	230/460/400	60/60/50	3.1/1.5/1.7	22.3/11.2/10.8	1760/1760/1450
		MA	575	60	1.16	7.2	1750
	1.5 kW IE3	NN	200/200/220	50/60/60	6.7/6.1/5.9	45.6/40.3/45.1	1450/1740/1760
		WN	380/400/400/440	50/50/60/60	3.4/3.4/3.1/3.0	21.9/23.2/20.4/22.8	1450/1450/1750/1760
		KN	220/380	60/60	5.9/3.4	45.1/25.8	1760/1760
		CN	220/230/380	50/50/50	5.9/5.9/3.4	38.5/40.4/22.1	1450/1450/1450
		EN	415/440/480	50/50/60	3.1/3.1/2.8	20.8/22.2/21.2	1450/1460/1760
		UN	230/460/400	60/60/50	5.9/2.9/3.3	44.9/22.6/23.2	1760/1760/1450
		MA	575	60	2.2	17.0	1760
	2.2 kW IE3	NN	200/200/220	50/60/60	9.3/8.6/8.2	70.3/56.9/63.7	1470/1760/1770
		WN	380/400/400/440	50/50/60/60	4.5/4.4/4.2/3.9	30.0/32.0/25.0/28.0	1440/1450/1740/1750
		KN	220/380	60/60	8.3/4.8	65.0/38.0	1770/1770
		CN	220/230/380	50/50/50	7.9/7.7/4.5	52.0/54.3/30.0	1460/1470/1440
		EN	415/440/480	50/50/60	4.3/4.3/3.8	33.1/35.5/29.8	1460/1470/1770
		UN	230/460/400	60/60/50	7.9/4.0/4.5	65.2/34.8/36.3	1770/1770/1470
		MA	575	60	3.3	24.4	1760

The rated current in the motor characteristics table and performance table is the current data for the motor operating without a gearbox.
With regard to gearmotors with a brake, it is necessary to consider the current value flowing through the brake as needed.
For more details, please contact your nearest Sales Office or the CS Center.

H2 Type 1-Phase Standard Voltage

Series	Power	Startup Method	Voltage (V)	Frequency (Hz)	Rated Current (A)	Startup Current (A)	Rated Speed (r/min)	Startup Torque (%)	Breakdown Torque (%)
MID	0.1 kW	Capacitor Run	100/100	50/60	1.7/1.9	4.40/4.07	1400/1700	60/70	165/172
	0.2 kW	Capacitor Start	100/100	50/60	5.1/4.5	20.0/20.0	1420/1700	276/294	194/187
	0.4 kW	Capacitor Start	100/100	50/60	8.7/7.9	32.0/32.0	1440/1730	210/205	189/178

The rated current in the motor characteristics table and performance table is the current data for the motor operating without a gearbox.
With regard to gearmotors with a brake, it is necessary to consider the current value flowing through the brake as needed.
For more details, please contact your nearest Sales Office or the CS Center.

H2 Type 1-Phase High Voltage (200 V Class)

Series	Power	Startup Method	Voltage (V)	Frequency (Hz)	Rated Current (A)	Startup Current (A)	Rated Speed (r/min)	Startup Torque (%)	Breakdown Torque (%)
MID	0.1 kW	Capacitor Run	200/200	50/60	0.82/0.96	2.10/2.00	1410/1700	65/81	163/178
	0.2 kW	Capacitor Start	200/200	50/60	2.5/2.2	10.0/10.0	1420/1700	254/250	203/205
	0.4 kW	Capacitor Start	200/200	50/60	4.3/3.9	19.0/18.0	1440/1730	181/190	240/217

The rated current in the motor characteristics table and performance table is the current data for the motor operating without a gearbox.
With regard to gearmotors with a brake, it is necessary to consider the current value flowing through the brake as needed.
For more details, please contact your nearest Sales Office or the CS Center.

1-2. Performance Table

H Type Gearmotors/Gearmotors with Brake

[Notes]
- The output shaft speed is the value relative to the synchronous speed of the motor and the reduction ratio.
- Three output shaft types, L, R, and T, are available for the H Type.
- Allowable output shaft O.H.L. is the value at the middle of the output shaft.
- The "*" mark indicates a limited torque type. Please make sure to check the allowable output shaft torque in the performance table.
- The reduction ratio in ▭ in the performance table indicates that the output shaft rotates in the directions shown below when the connection is made as shown on page 546 (CW). (Refer to the figure on the right)
  3-phase: L shaft in the CW direction and R and T shafts in the CCW direction when viewed from the output shaft side
  1-phase: L shaft in the CCW direction and R and T shafts in the CW direction when viewed from the output shaft side

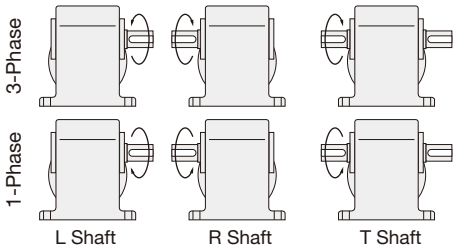

Series	Motor Power	Frame Size	Reduction Ratio	Actual Reduction Ratio	Output Shaft Speed r/min 50 Hz	Output Shaft Speed r/min 60 Hz	Allowable Output Shaft Torque N·m	Allowable Output Shaft O.H.L. N	Drawings Foot Mount	Drawings Flange Mount
MINI	15 W	15	1/10	1/10	150	180	0.69	343	P.254	P.270
			1/15	1/15	100	120	0.98	441		
			1/20	1/20	75	90	1.27	539		
			1/25	1/25	60	72	1.67	588		
			1/30	1/30	50	60	1.96	686		
			1/40	1/40	37.5	45	2.65	784		
			1/50	1/50	30	36	3.33	882		
			1/60	1/60	25	30	3.92	882		
			1/80	1/80	18.8	22.5	5.00	980		
			1/100	1/100	15	18	6.27	980		
			1/120	1/120	12.5	15	7.45	1080		
			1/160	1/160	9.4	11.2	9.80	1080		
			1/200	1/200	7.5	9	12.7	1080		
			1/240	1/240	6.3	7.5	14.7	1080		
		22	1/300	1/300	5	6	16.7	1760	P.256	P.272
			1/375	1/375	4	4.8	20.6	1760		
			1/450	2/885	3.3	4	25.5	1760		
			1/600	1/600	2.5	3	33.3	1760		
			1/750	1/750	2	2.4	42.1	1760		
			1/900	1/885	1.7	2	50.0	1760		
			1/1200	1/1160	1.3	1.5	66.6	1760		
			1/1500	1/1450	1	1.2	83.3	1760		
			1/1800	1/1711	0.8	1	98.0	1760		
	25 W	15	1/10	4/41	150	180	1.08	343	P.254	P.270
			1/15	8/123	100	120	1.67	441		
			1/20	2/41	75	90	2.25	539		
			1/25	8/205	60	72	2.74	588		
			1/30	4/123	50	60	3.33	686		
			1/40	1/41	37.5	45	4.41	784		
			1/50	4/205	30	36	5.49	882		
			1/60	20/1189	25	30	6.66	882		
			1/80	1/82	18.8	22.5	8.43	980		
			1/100	2/205	15	18	10.8	980		
			1/120	1/123	12.5	15	12.7	1080		
			1/160	1/164	9.4	11.2	16.7	1080		
			1/200	1/205	7.5	9	20.6	1080		
			1/240	5/1189	6.3	7.5	25.5	1080		
		22	1/300	1/300	5	6	28.4	1760	P.256	P.272
			1/375	1/375	4	4.8	35.3	1760		
			1/450	2/885	3.3	4	42.1	1760		
			1/600	1/600	2.5	3	55.9	1760		
			1/750	1/750	2	2.4	69.6	1760		
			1/900	1/885	1.7	2	84.3	1760		
		28	1/1200	1/1160	1.3	1.5	108	2740	P.259	-
			1/1500	1/1450	1	1.2	137	2740		
			1/1800	1/1711	0.8	1	167	2740		

1-2. Performance Table

Series	Motor Power	Frame Size	Reduction Ratio	Actual Reduction Ratio	Output Shaft Speed r/min 50 Hz	Output Shaft Speed r/min 60 Hz	Allowable Output Shaft Torque N·m	Allowable Output Shaft O.H.L. N	Drawings Foot Mount	Drawings Flange Mount
MINI	40 W	15	1/10	4/41	150	180	1.76	343	P.254	P.270
			1/15	8/123	100	120	2.65	441		
			1/20	2/41	75	90	3.53	539		
			1/25	8/205	60	72	4.41	588		
			1/30	4/123	50	60	5.29	686		
			1/40	1/41	37.5	45	7.06	784		
			1/50	4/205	30	36	8.82	882		
			1/60	20/1189	25	30	10.8	882		
			1/80	1/82	18.8	22.5	13.7	980		
			1/100	2/205	15	18	16.7	980		
			1/120	1/123	12.5	15	20.6	1080		
		18	1/160	1/164	9.4	11.2	26.5	1370	P.255	P.271
			1/200	1/205	7.5	9	33.3	1370		
			1/240	1/246	6.3	7.5	40.2	1370		
		22	1/300	1/300	5	6	45.1	1760	P.256	P.272
			1/375	1/375	4	4.8	55.9	1760		
			1/450	2/885	3.3	4	67.6	1760		
		28	1/600	1/600	2.5	3	90.2	1760	P.259	-
			1/750	1/750	2	2.4	118	2740		
			1/900	1/885	1.7	2	137	2740		
		32	1/1200	1/1200	1.3	1.5	176	5100	P.262	-
			1/1500	1/1500	1	1.2	225	5100		
			1/1800	1/1800	0.8	1	274	5100		
	60 W	15 (Note 1)	1/10	4/41	150	180	2.74	343	P.254	P.270
			1/15	8/123	100	120	4.12	441		
			1/20	2/41	75	90	5.49	539		
			1/25	8/205	60	72	6.96	588		
			1/30	4/123	50	60	8.33	686		
			1/40	1/41	37.5	45	10.8	784		
			1/50	4/205	30	36	13.7	882		
			1/60	20/1189	50	30	16.7	882		
		18 (Note 1)	1/10	4/41	150	180	2.74	343	P.255	P.271
			1/15	8/123	100	120	4.12	441		
			1/20	2/41	75	90	5.49	539		
			1/25	8/205	60	72	6.96	588		
			1/30	4/123	50	60	8.33	686		
			1/40	1/41	37.5	45	10.8	784		
			1/50	4/205	30	36	13.7	882		
			1/60	2/123	25	30	16.7	882		
		18	1/80	1/82	18.8	22.5	20.6	1270	P.255	P.271
			1/100	2/205	15	18	26.5	1270		
			1/120	1/123	12.5	15	31.4	1370		
			1/160	1/164	9.4	11.2	42.1	1370		
			1/200	1/205	7.5	9	52.9	1370		
			* 1/240	1/246	6.3	7.5	53.9	1370		
		22	1/300	1/300	5	6	70.6	1760	P.256	P.272
			1/375	1/375	4	4.8	88.2	1760		
			1/450	2/885	3.3	4	108	1760		
		28	1/600	1/600	2.5	3	137	2740	P.259	-
			1/750	1/750	2	2.4	176	2740		
			1/900	1/885	1.7	2	216	2740		
		32	1/1200	1/1200	1.3	1.5	284	5100	P.262	-
			1/1500	1/1500	1	1.2	353	5100		
			1/1800	1/1800	0.8	1	421	5100		

Note 1: Please note that with regard to reduction ratios of 1/10 to 1/30 of 60 W gearmotors, the frame size for Three-phase standard voltages (200 V class) is 15, but the frame size for Three-phase high voltage (400 V class) and Single-phase voltages is 18.

Series	Motor Power	Frame Size	Reduction Ratio	Actual Reduction Ratio	Output Shaft Speed r/min 50 Hz	Output Shaft Speed r/min 60 Hz	Allowable Output Shaft Torque N·m	Allowable Output Shaft O.H.L. N	Drawings Foot Mount	Drawings Flange Mount
MINI	90 W	18	1/10	4/41	150	180	4.12	441	P.255	P.271
			1/15	8/123	100	120	6.17	588		
			1/20	2/41	75	90	8.33	735		
			1/25	8/205	60	72	10.8	882		
			1/30	4/123	50	60	12.7	980		
			1/40	1/41	37.5	45	16.7	1080		
			1/50	4/205	30	36	20.6	1180		
			1/60	2/123	25	30	24.5	1180		
			1/80	1/82	18.8	22.5	31.4	1270		
			1/100	2/205	15	18	39.2	1270		
			1/120	1/123	12.5	15	47.0	1370		
			* 1/160	1/164	9.4	11.2	53.9	1370		
			* 1/200	1/205	7.5	9	53.9	1370		
			* 1/240	1/246	6.3	7.5	53.9	1370		
		28	1/300	1/300	5	6	108	2740	P.259	-
			1/375	1/375	4	4.8	137	2740		
			1/450	2/885	3.3	4	157	2740		
		32	1/600	1/600	2.5	3	216	5100	P.262	-
			1/750	1/750	2	2.4	265	5100		
			1/900	1/900	1.7	2	314	5100		
		40	1/1200	1/1200	1.3	1.5	421	7060	P.265	-
			1/1500	1/1500	1	1.2	529	7060		
			1/1800	1/1800	0.8	1	637	7060		

Note 1: Please be sure to read the notes on page 246.

H2 Type Gearmotors/Gearmotors with Brake

[Notes]

- The values in parentheses ( ) in the drawings are the indications for gearmotors with brake.
- The output shaft speed is the value relative to the synchronous speed of the motor and the reduction ratio.
- In the performance table, ▭ indicates that the L shaft rotates clockwise and the R and T shafts rotate counterclockwise when viewed from the output shaft direction when the connection is made as shown on page 547 (CW). (Refer to the figure on the right)
- Allowable output shaft O.H.L. is the value at the middle of the output shaft.
- The "*" mark indicates a limited torque type. Please make sure to check the allowable output shaft torque in the performance table.

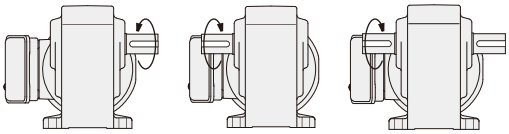

L Shaft R Shaft T Shaft

Series	Motor Power	Frame Size	Reduction Ratio	Actual Reduction Ratio	Output Shaft Speed r/min 50 Hz	Output Shaft Speed r/min 60 Hz	Allowable Output Shaft Torque N·m 50 Hz	Allowable Output Shaft Torque N·m 60 Hz	Allowable Output Shaft O.H.L. N	Drawings Foot Mount	Drawings Flange Mount
MID	3-Phase 0.1 kW	22	1/5	1/5	300	360	2.8	2.4	588	P.257	P.273
			1/10	1/10	150	180	5.7	4.8	931		
			1/15	1/15	100	120	8.6	7.2	1030		
			1/20	1/20	75	90	12	9.5	1180		
			1/25	1/25	60	72	15	12	1270		
			1/30	1/30	50	60	18	15	1370		
			1/40	1/40	37.5	45	23	19	1570		
			1/50	1/50	30	36	28	24	1720		
			1/60	1/59	25	30	34	28	1760		
			1/80	1/80	18.8	22.5	44	37	1760		
			1/100	1/100	15	18	55	46	1760		
			1/120	1/120	12.5	15	67	55	1760		
			1/160	1/160	9.4	11.2	88	74	1760		
			1/200	1/200	7.5	9	111	92	1760		
			* 1/240	1/236	6.3	7.5	118	111	1760		
		28	1/300	7/2120	5	6	145	121	2840	P.260	-
			1/375	7/2650	4	4.8	181	151	2840		
			1/450	7/3127	3.3	4	218	181	2840		
		32	1/600	7/4240	2.5	3	286	238	4120	P.263	-
			1/750	7/5300	2	2.4	358	298	4120		
			1/900	7/6360	1.7	2	429	358	4120		
			* 1/1200	7/8480	1.3	1.5	431	431	4120		
			* 1/1500	7/10600	1	1.2	431	431	4120		
	3-Phase 0.2 kW	22	1/5	1/5	300	360	5.7	4.8	588	P.257	P.273
			1/10	1/10	150	180	12	9.5	931		
			1/15	1/15	100	120	18	15	1030		
			1/20	1/20	75	90	23	19	1180		
			1/25	1/25	60	72	28	24	1270		
			1/30	1/30	50	60	34	28	1370		
			1/40	1/40	37.5	45	46	38	1570		
			1/50	1/50	30	36	57	48	1720		
			1/60	1/59	25	30	69	57	1810		
		28	1/80	1/80	18.8	22.5	88	74	2450	P.260	-
			1/100	1/100	15	18	111	92	2650		
			1/120	1/120	12.5	15	133	111	2740		
			1/160	1/160	9.4	11.2	177	148	2840		
			1/200	1/200	7.5	9	221	184	2840		
			1/240	1/236	6.3	7.5	245	221	2840		
		32	1/300	7/2120	5	6	294	245	3820	P.263	-
			1/375	7/2650	4	4.8	368	306	4120		
			1/450	7/3127	3.3	4	431	368	4120		
		40	1/600	7/4240	2.5	3	588	490	6760	P.266	-
			1/750	7/5300	2	2.4	735	613	6760		
			* 1/900	7/6360	1.7	2	764	735	6760		
			* 1/1200	7/8480	1.3	1.5	764	764	6760		
			* 1/1500	7/10600	1	1.2	764	764	6760		

Series	Motor Power	Frame Size	Reduction Ratio	Actual Reduction Ratio	Output Shaft Speed r/min 50 Hz	Output Shaft Speed r/min 60 Hz	Allowable Output Shaft Torque N·m 50 Hz	Allowable Output Shaft Torque N·m 60 Hz	Allowable Output Shaft O.H.L. N	Drawings Foot Mount
MID	3-Phase 0.4 kW	28	1/5	1/5	300	360	12	9.5	931	P.260
			1/10	1/10	150	180	23	19	1470	
			1/15	1/15	100	120	34	28	1670	
			1/20	1/20	75	90	46	38	1860	
			1/25	1/25	60	72	57	48	2010	
			1/30	1/30	50	60	69	57	2210	
			1/40	1/40	37.5	45	92	76	2450	
			1/50	1/50	30	36	115	95	2650	
			1/60	1/59	25	30	137	115	2740	
		32	1/80	1/80	18.8	22.5	177	148	3430	P.263
			1/100	1/100	15	18	221	184	3820	
			1/120	1/120	12.5	15	266	221	4120	
			1/160	1/160	9.4	11.2	355	295	4120	
			1/200	1/200	7.5	9	431	369	4120	
			* 1/240	1/236	6.3	7.5	431	431	4120	
		40	1/300	7/2080	5	6	572	477	6760	P.266
			1/375	7/2600	4	4.8	715	597	6760	
			* 1/450	7/3120	3.3	4	764	715	6760	
		50	1/600	21/12220	2.5	3	1150	955	9510	P.268
			* 1/750	1/728	2	2.4	1230	1190	9510	
			* 1/900	7/6240	1.7	2	1230	1230	9510	
			* 1/1200	21/24440	1.3	1.5	1230	1230	9510	
			* 1/1500	1/1456	1	1.2	1230	1230	9510	
	3-Phase 0.75 kW	32	1/5	1/5	300	360	22	18	1520	P.263
			1/10	1/10	150	180	43	36	2010	
			1/15	1/15	100	120	65	54	2210	
			1/20	1/20	75	90	86	72	2450	
			1/25	1/25	60	72	108	89	2740	
			1/30	1/30	50	60	128	107	2940	
			1/40	1/40	37.5	45	172	143	3430	
			1/50	1/50	30	36	215	179	3820	
			1/60	1/59	25	30	258	215	4120	
		40	1/80	1/80	18.8	22.5	332	277	5780	P.266
			1/100	1/100	15	18	416	346	6080	
			1/120	1/120	12.5	15	498	415	6270	
			1/160	1/160	9.4	11.2	664	554	6470	
			* 1/200	1/200	7.5	9	764	692	6660	
			* 1/240	1/240	6.3	7.5	764	764	6660	
		50	1/300	7/2120	5	6	1070	895	7740	P.268
			* 1/375	7/2650	4	4.8	1230	1120	8040	
			* 1/450	7/3180	3.3	4	1230	1230	8530	

Note 1: Please be sure to read the notes on page 249.

1-2. Performance Table

Series	Motor Power	Frame Size	Reduction Ratio	Actual Reduction Ratio	Output Shaft Speed r/min 50 Hz	Output Shaft Speed r/min 60 Hz	Allowable Output Shaft Torque N·m 50 Hz	Allowable Output Shaft Torque N·m 60 Hz	Allowable Output Shaft O.H.L. N	Drawings Foot Mount
MID	3-Phase 1.5 kW	40	1/ 5	1/5	300	360	43	36	2650	P.266
			1/ 10	1/10	150	180	86	72	3530	
			1/ 15	1/15	100	120	128	107	4410	
			1/ 20	1/20	75	90	172	143	4700	
			1/ 25	1/25	60	72	215	179	5100	
			1/ 30	1/30	50	60	258	215	5290	
			1/ 40	1/40	37.5	45	344	277	5590	
			1/ 50	1/50	30	36	429	346	5880	
			1/ 60	1/60	25	30	515	415	6080	
		50	1/ 80	3/235	18.8	22.5	664	554	8530	P.268
			1/100	1/98	15	18	830	692	8820	
			1/120	1/120	12.5	15	1000	830	9020	
			* 1/160	3/470	9.4	11.2	1230	1110	9310	
			* 1/200	1/196	7.5	9	1230	1230	9510	
			* 1/240	1/240	6.3	7.5	1230	1230	9510	
	3-Phase 2.2 kW	50	1/5	1/5	300	360	63	53	3920	P.268
			1/10	1/10	150	180	126	105	4410	
			1/15	1/15	100	120	189	157	4900	
			1/20	12/235	75	90	252	210	5490	
			1/25	2/49	60	72	315	263	6080	
			1/30	1/30	50	60	378	315	6570	
			1/40	1/40	37.5	45	487	406	7060	
			1/50	1/50	30	36	609	507	7550	
			1/60	1/60	25	30	731	609	8130	
			1/80	3/235	18.8	22.5	974	812	8430	
			1/100	1/98	15	18	1220	1010	8820	
			* 1/120	1/120	12.5	15	1230	1220	8820	

Note 1: Please be sure to read the notes on page 249.

H2 Type Gearmotors/Gearmotors with Brake

[Notes]

- The values in parentheses ( ) in the drawings are the indications for gearmotors with brake.
- The output shaft speed is the value relative to the synchronous speed of the motor and the reduction ratio.
- In the performance table, ▭ indicates that the L shaft rotates clockwise and the R and T shafts rotate counterclockwise when viewed from the output shaft side when the connection is made as shown on page 548 (CW). (Refer to the figure on the right)
- The startup torque of the single-phase 0.1 kW motor is 60 to 80 % because a capacitor run motor is adopted.
- Allowable output shaft O.H.L. is the value at the middle of the output shaft.
- The "*" mark indicates a limited torque type. Please make sure to check the allowable output shaft torque in the performance table.

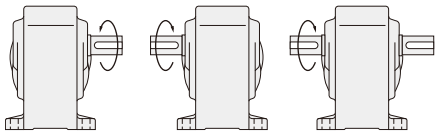

L Shaft R Shaft T Shaft

Series	Motor Power	Frame Size	Reduction Ratio	Actual Reduction Ratio	Output Shaft Speed r/min 50 Hz	Output Shaft Speed r/min 60 Hz	Allowable Output Shaft Torque N·m 50 Hz	Allowable Output Shaft Torque N·m 60 Hz	Allowable Output Shaft O.H.L. N	Drawings Foot Mount	Drawings Flange Mount
MID	1-Phase 0.1 kW	22	1/5	1/5	300	360	2.8	2.4	588	P.258	P.274
			1/10	1/10	150	180	5.7	4.8	931		
			1/15	1/15	100	120	8.6	7.2	1030		
			1/20	1/20	75	90	12	9.5	1180		
			1/25	1/25	60	72	15	12	1270		
			1/30	1/30	50	60	18	15	1370		
			1/40	1/40	37.5	45	23	19	1570		
			1/50	1/50	30	36	28	24	1720		
			1/60	1/59	25	30	34	28	1760		
			1/80	1/80	18.8	22.5	44	37	1760		
			1/100	1/100	15	18	55	46	1760		
			1/120	1/120	12.5	15	67	55	1760		
			1/160	1/160	9.4	11.2	88	74	1760		
			1/200	1/200	7.5	9	111	92	1760		
			* 1/240	1/236	6.3	7.5	118	111	1760		
	1-Phase 0.2 kW	22	1/5	1/5	300	360	5.7	4.8	588	P.258	P.274
			1/10	1/10	150	180	12	9.5	931		
			1/15	1/15	100	120	18	15	1030		
			1/20	1/20	75	90	23	19	1180		
			1/25	1/25	60	72	28	24	1270		
			1/30	1/30	50	60	34	28	1370		
			1/40	1/40	37.5	45	46	38	1570		
			1/50	1/50	30	36	57	48	1720		
			1/60	1/59	25	30	69	57	1810		
		28	1/80	1/80	18.8	22.5	88	74	2450	P.261	-
			1/100	1/100	15	18	111	92	2650		
			1/120	1/120	12.5	15	133	111	2740		
			1/160	1/160	9.4	11.2	177	148	2840		
			1/200	1/200	7.5	9	221	184	2840		
			1/240	1/236	6.3	7.5	245	221	2840		
		32	1/300	7/2120	5	6	294	245	3820	P.264	-
			1/375	7/2650	4	4.8	368	306	4120		
			1/450	7/3127	3.3	4	431	368	4120		
		40	1/600	7/4240	2.5	3	588	490	6760	P.267	-
			1/750	7/5300	2	2.4	735	613	6760		
			* 1/900	7/6360	1.7	2	764	735	6760		
			* 1/1200	7/8480	1.3	1.5	764	764	6760		
			* 1/1500	7/10600	1	1.2	764	764	6760		

1-2. Performance Table

Series	Motor Power	Frame Size	Reduction Ratio	Actual Reduction Ratio	Output Shaft Speed		Allowable Output Shaft Torque		Allowable Output Shaft O.H.L.	Drawings	
					r/min		N·m		N	Foot Mount	Flange Mount
					50 Hz	60 Hz	50 Hz	60 Hz			
MID	1-Phase 0.4 kW	28	1/5	1/5	300	360	12	9.5	931	P.261	-
			1/10	1/10	150	180	23	19	1470		
			1/15	1/15	100	120	34	28	1670		
			1/20	1/20	75	90	46	38	1860		
			1/25	1/25	60	72	57	48	2010		
			1/30	1/30	50	60	69	57	2210		
			1/40	1/40	37.5	45	92	76	2450		
			1/50	1/50	30	36	115	95	2650		
			1/60	1/59	25	30	137	115	2740		
		32	1/80	1/80	18.8	22.5	177	148	3430	P.264	-
			1/100	1/100	15	18	221	184	3820		
			1/120	1/120	12.5	15	266	221	4120		
			1/160	1/160	9.4	11.2	355	295	4120		
			1/200	1/200	7.5	9	431	369	4120		
			* 1/240	1/236	6.3	7.5	431	431	4120		
		40	1/300	7/2080	5	6	572	477	6760	P.267	-
			1/375	7/2600	4	4.8	715	597	6760		
			* 1/450	7/3120	3.3	4	764	715	6760		
		50	1/600	21/12220	2.5	3	1150	955	9510	P.269	-
			* 1/750	1/728	2	2.4	1230	1190	9510		
			* 1/900	7/6240	1.7	2	1230	1230	9510		
			* 1/1200	21/24440	1.3	1.5	1230	1230	9510		
			* 1/1500	1/1456	1	1.2	1230	1230	9510		

1-3. Drawings

H Type Right Angle Shaft | Shaft Diameter **15** | **Foot** Mounting

The values in parentheses ( ) are the indications for gearmotors with brake.

<Figure 1>

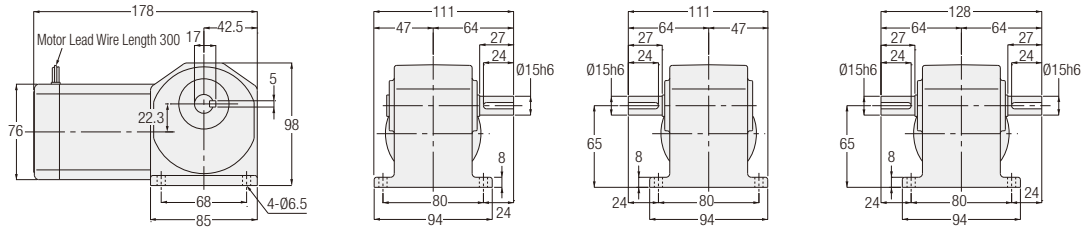

<Figure 2>

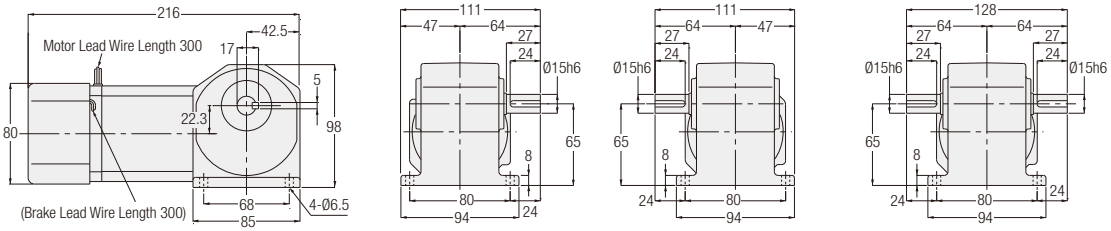

L Shaft R Shaft T Shaft

Number of Phases	Power	Part Number	Reduction Ratio	Figure Number	Brake	Approx. Weight (kg)
3-Phase	15 W	HLM-15#-∗∗∗-T15	10, 15, 20, 25, 30, 40, 50, 60, 80, 100, 120, 160, 200, 240	1	No	3
		HLM-15#-∗∗∗-T15W				
		HLMN-15#-∗∗∗-T15	10, 15, 20, 25, 30, 40, 50, 60, 80, 100, 120, 160, 200, 240	2	Yes	3
		HLMN-15#-∗∗∗-T15W				
	25 W	HLM-15#-∗∗∗-T25	10, 15, 20, 25, 30, 40, 50, 60, 80, 100, 120, 160, 200, 240	1	No	3
		HLM-15#-∗∗∗-T25W				
		HLMN-15#-∗∗∗-T25	10, 15, 20, 25, 30, 40, 50, 60, 80, 100, 120, 160, 200, 240	2	Yes	3
		HLMN-15#-∗∗∗-T25W				
	40 W	HLM-15#-∗∗∗-T40	10, 15, 20, 25, 30, 40, 50, 60, 80, 100, 120	1	No	3
		HLM-15#-∗∗∗-T40W		2		
		HLMN-15#-∗∗∗-T40	10, 15, 20, 25, 30, 40, 50, 60, 80, 100, 120	2	Yes	3
		HLMN-15#-∗∗∗-T40W				
	60 W	HLM-15#-∗∗∗-T60	10, 15, 20, 25, 30, 40, 50, 60	2	No	3
		HLMN-15#-∗∗∗-T60		2	Yes	
1-Phase	15 W	HLM-15#-∗∗∗-S15	10, 15, 20, 25, 30, 40, 50, 60, 80, 100, 120, 160, 200, 240	1	No	3
		HLM-15#-∗∗∗-S15W				
		HLMN-15#-∗∗∗-S15	10, 15, 20, 25, 30, 40, 50, 60, 80, 100, 120, 160, 200, 240	2	Yes	3
		HLMN-15#-∗∗∗-S15W				
	25 W	HLM-15#-∗∗∗-S25	10, 15, 20, 25, 30, 40, 50, 60, 80, 100, 120, 160, 200, 240	1	No	3
		HLM-15#-∗∗∗-S25W				
		HLMN-15#-∗∗∗-S25	10, 15, 20, 25, 30, 40, 50, 60, 80, 100, 120, 160, 200, 240	2	Yes	3
		HLMN-15#-∗∗∗-S25W				
	40 W	HLM-15#-∗∗∗-S40	10, 15, 20, 25, 30, 40, 50, 60, 80, 100, 120	2	No	3
		HLM-15#-∗∗∗-S40W				
		HLMN-15#-∗∗∗-S40	10, 15, 20, 25, 30, 40, 50, 60, 80, 100, 120	2	Yes	3
		HLMN-15#-∗∗∗-S40W				

Note: A shaft arrangement (L, R, T) will be indicated as # in the nomenclature. In addition, a reduction ratio will be indicated as ∗∗∗.
Note: Please refer to page 246 for the performance table.

H Type Right Angle Shaft | Shaft Diameter 18 | **Foot** Mounting

The values in parentheses ( ) are the indications for gearmotors with brake.

<Figure 1>

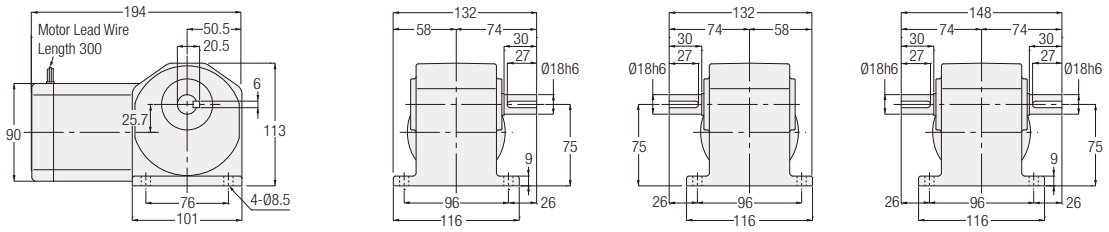

<Figure 2>

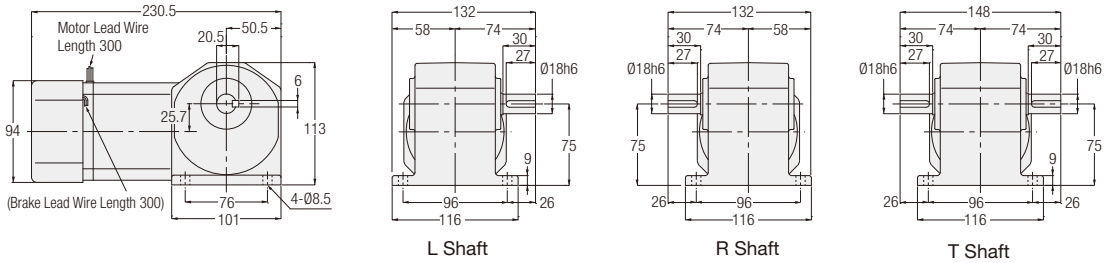

L Shaft R Shaft T Shaft

Number of Phases	Power	Part Number	Reduction Ratio	Figure Number	Brake	Approx. Weight (kg)
3-Phase	40 W	HLM-18#-∗∗∗-T40	160, 200, 240	1	No	4
		HLM-18#-∗∗∗-T40W				
		HLMN-18#-∗∗∗-T40	160, 200, 240	2	Yes	4
		HLMN-18#-∗∗∗-T40W				
	60 W	HLM-18#-∗∗∗-T60	80, 100, 120, 160, 200, 240	1	No	4
		HLM-18#-∗∗∗-T60W				
		HLMN-18#-∗∗∗-T60	80, 100, 120, 160, 200, 240	2	Yes	4
		HLMN-18#-∗∗∗-T60W				
	90 W	HLM-18#-∗∗∗-T90	10, 15, 20, 25, 30, 40, 50, 60, 80, 100, 120, 160, 200, 240	1	No	4
		HLM-18#-∗∗∗-T90W		2		
		HLMN-18#-∗∗∗-T90	10, 15, 20, 25, 30, 40, 50, 60, 80, 100, 120, 160, 200, 240	2	Yes	4
		HLMN-18#-∗∗∗-T90W				
1-Phase	40 W	HLM-18#-∗∗∗-S40	160, 200, 240	1	No	4
		HLM-18#-∗∗∗-S40W				
		HLMN-18#-∗∗∗-S40	160, 200, 240	2	Yes	4
		HLMN-18#-∗∗∗-S40W				
	60 W	HLM-18#-∗∗∗-S60	10, 15, 20, 25, 30, 40, 50, 60, 80, 100, 120, 160, 200, 240	2	No	4
		HLM-18#-∗∗∗-S60W				
		HLMN-18#-∗∗∗-S60	80, 100, 120, 160, 200, 240	2	Yes	4
		HLMN-18#-∗∗∗-S60W				
	90 W	HLM-18#-∗∗∗-S90	10, 15, 20, 25, 30, 40, 50, 60, 80, 100, 120, 160, 200, 240	2	No	4
		HLM-18#-∗∗∗-S90W				
		HLMN-18#-∗∗∗-S90	10, 15, 20, 25, 30, 40, 50, 60, 80, 100, 120, 160, 200, 240	2	Yes	4
		HLMN-18#-∗∗∗-S90W				

Note: A shaft arrangement (L, R, T) will be indicated as # in the nomenclature. In addition, a reduction ratio will be indicated as ∗∗∗.
Note: Please refer to page 247 for the performance table.

H Type Right Angle Shaft | Shaft Diameter 22 | **Foot** Mounting

The values in parentheses ( ) are the indications for gearmotors with brake.

<Figure 1>

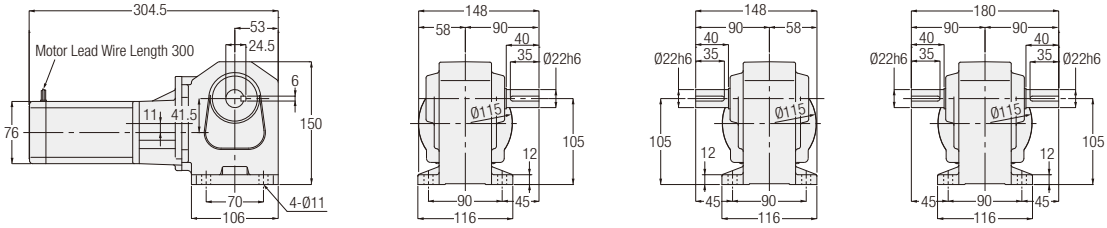

<Figure 2>

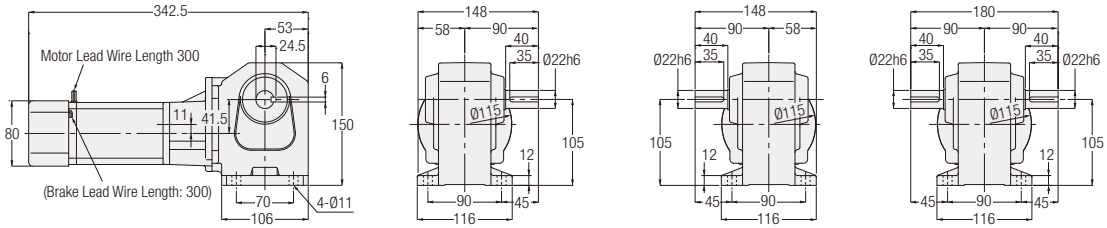

L Shaft R Shaft T Shaft

Number of Phases	Power	Part Number	Reduction Ratio	Figure Number	Brake	Approx. Weight (kg)
3-Phase	15 W	HLM-22#-∗∗∗-T15	300, 375, 450, 600, 750, 900, 1200, 1500, 1800	1	No	6
		HLM-22#-∗∗∗-T15W				
		HLMN-22#-∗∗∗-T15	300, 375, 450, 600, 750, 900, 1200, 1500, 1800	2	Yes	6
		HLMN-22#-∗∗∗-T15W				
	25 W	HLM-22#-∗∗∗-T25	300, 375, 450, 600, 750, 900	1	No	6
		HLM-22#-∗∗∗-T25W				
		HLMN-22#-∗∗∗-T25	300, 375, 450, 600, 750, 900	2	Yes	6
		HLMN-22#-∗∗∗-T25W				
	40 W	HLM-22#-∗∗∗-T40	300, 375, 450	1	No	6
		HLM-22#-∗∗∗-T40W		2		
		HLMN-22#-∗∗∗-T40	300, 375, 450	2	Yes	6
		HLMN-22#-∗∗∗-T40W				
	60 W	HLM-22#-∗∗∗-T60	300, 375, 450	2	No	6
		HLM-22#-∗∗∗-T60W				
		HLMN-22#-∗∗∗-T60	300, 375, 450	2	Yes	6
		HLMN-22#-∗∗∗-T60W				
1-Phase	15 W	HLM-22#-∗∗∗-S15	300, 375, 450, 600, 750, 900, 1200, 1500, 1800	1	No	6
		HLM-22#-∗∗∗-S15W				
		HLMN-22#-∗∗∗-S15	300, 375, 450, 600, 750, 900, 1200, 1500, 1800	2	Yes	6
		HLMN-22#-∗∗∗-S15W				
	25 W	HLM-22#-∗∗∗-S25	300, 375, 450, 600, 750, 900	1	No	6
		HLM-22#-∗∗∗-S25W				
		HLMN-22#-∗∗∗-S25	300, 375, 450, 600, 750, 900	2	Yes	6
		HLMN-22#-∗∗∗-S25W				
	40 W	HLM-22#-∗∗∗-S40	300, 375, 450	2	No	6
		HLM-22#-∗∗∗-S40W				
		HLMN-22#-∗∗∗-S40	300, 375, 450	2	Yes	6
		HLMN-22#-∗∗∗-S40W				
	60 W	HLM-22#-∗∗∗-S60	300, 375, 450	2	No	6
		HLM-22#-∗∗∗-S60W				
		HLMN-22#-∗∗∗-S60	300, 375, 450	2	Yes	6
		HLMN-22#-∗∗∗-S60W				

Note: A shaft arrangement (L, R, T) will be indicated as # in the nomenclature. In addition, a reduction ratio will be indicated as ∗∗∗.
Note: Please refer to page 246 for the performance table.

H2 Type Right Angle Shaft | Shaft Diameter 22 | **Foot** Mounting

The values in parentheses ( ) are the indications for gearmotors with brake.

<Figure 1>

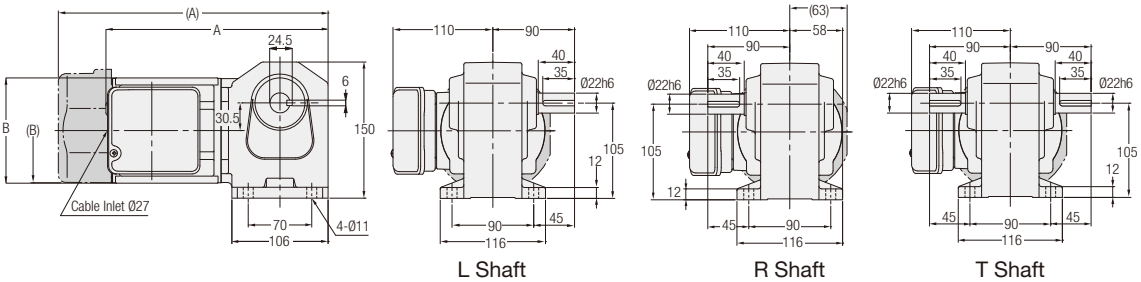

L Shaft R Shaft T Shaft

Number of Phases	Power	Part Number	Reduction Ratio	Figure Number	Brake	Approx. Weight (kg)	A	B
3-Phase	0.1 kW	H2L22#∗∗∗-MM01T◇◇TN	5, 10, 15, 20, 25, 30, 40, 50, 60, 80, 100, 120, 160, 200, 240	1	No	6.5	232	116
		H2L22#∗∗∗-MM01T◇◇TB◆			Yes	8	272	□126
	0.2 kW	H2L22#∗∗∗-MM02T◇◇TN	5, 10, 15, 20, 25, 30, 40, 50, 60	1	No	7.5	247	116
		H2L22#∗∗∗-MM02T◇◇TB◆			Yes	9	297.5	□126

Note: A shaft arrangement (L, R, T) will be indicated as # in the nomenclature. In addition, a reduction ratio will be indicated as ∗∗∗, a supply voltage/ certification code will be indicated as ◇◇, and a brake specification will be indicated as ◆.

Note: Please refer to page 249 for the performance table.

H2 Type Right Angle Shaft | Shaft Diameter 22 | Foot Mounting

The values in parentheses ( ) are the indications for gearmotors with brake.

<Figure 1>

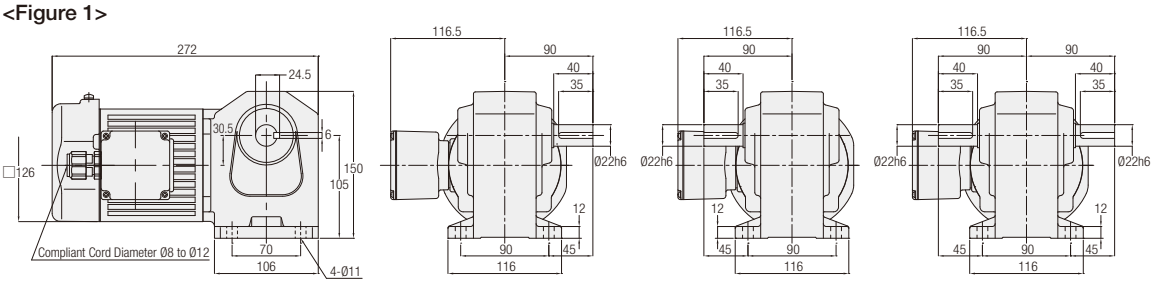

<Figure 2>

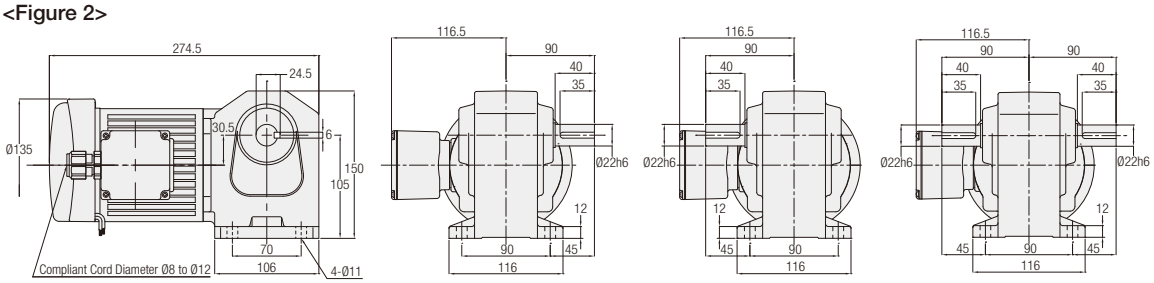

<Figure 3>

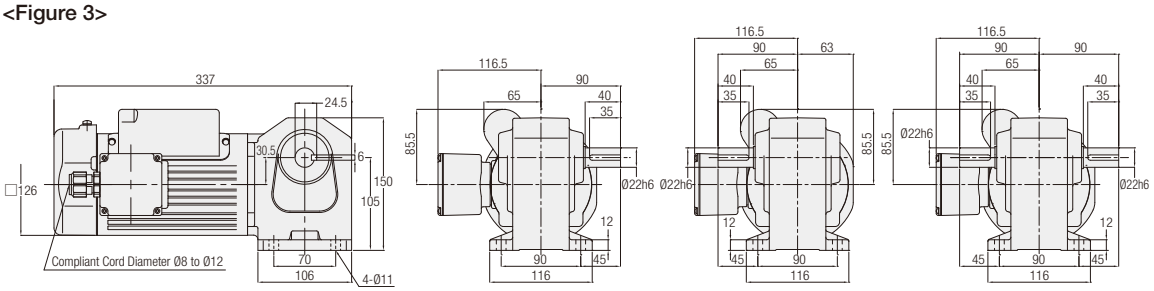

<Figure 4>

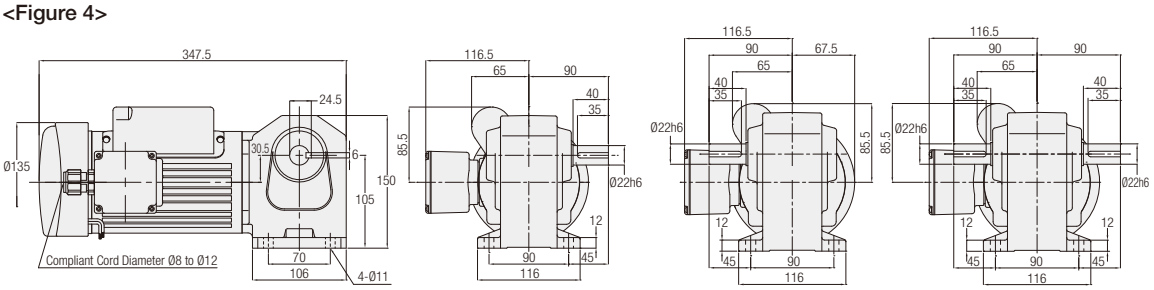

L Shaft R Shaft T Shaft

Number of Phases	Power	Part Number	Reduction Ratio	Figure Number	Brake	Approx. Weight (kg)
1-Phase	0.1 kW	H2L22#***-MM01S◇JAN	5, 10, 15, 20, 25, 30, 40, 50, 60, 80, 100, 120, 160, 200, 240	1	No	7
		H2L22#***-MM01S◇JAB2		2	Yes	8
	0.2 kW	H2L22#***-MM02C◇JAN	5, 10, 15, 20, 25, 30, 40, 50, 60	3	No	9.5
		H2L22#***-MM02C◇JAB2		4	Yes	11

Note: A shaft arrangement (L, R, T) will be indicated as # in the nomenclature. In addition, a reduction ratio will be indicated as *** and a supply voltage code will be indicated as ◇.

Note: Please refer to page 252 for the performance table.

H Type Right Angle Shaft | Shaft Diameter **28** | **Foot** Mounting

The values in parentheses ( ) are the indications for gearmotors with brake.

<Figure 1>

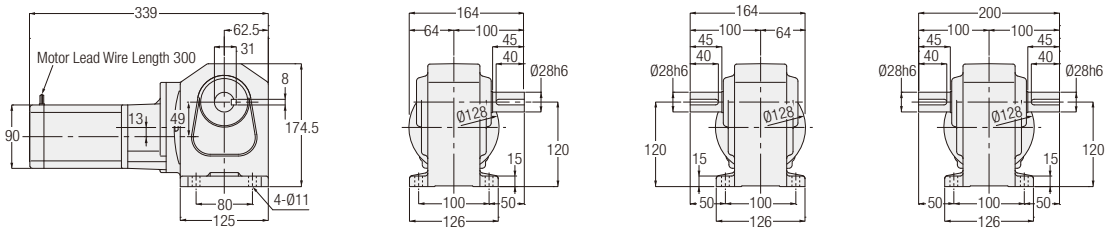

<Figure 2>

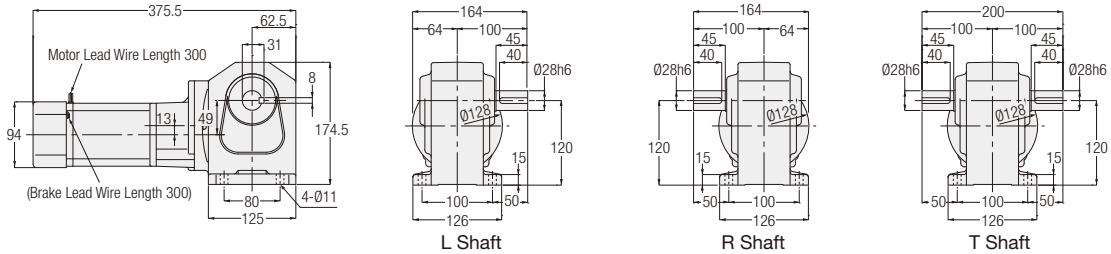

L Shaft R Shaft T Shaft

Number of Phases	Power	Part Number	Reduction Ratio	Figure Number	Brake	Approx. Weight (kg)
3-Phase	25 W	HLM-28#-∗∗∗-T25	1200, 1500, 1800	1	No	9
		HLM-28#-∗∗∗-T25W				
		HLMN-28#-∗∗∗-T25	1200, 1500, 1800	2	Yes	9
		HLMN-28#-∗∗∗-T25W				
	40 W	HLM-28#-∗∗∗-T40	600, 750, 900	1	No	9
		HLM-28#-∗∗∗-T40W				
		HLMN-28#-∗∗∗-T40	600, 750, 900	2	Yes	9
		HLMN-28#-∗∗∗-T40W				
	60 W	HLM-28#-∗∗∗-T60	600, 750, 900	1	No	9
		HLM-28#-∗∗∗-T60W				
		HLMN-28#-∗∗∗-T60	600, 750, 900	2	Yes	9
		HLMN-28#-∗∗∗-T60W				
	90 W	HLM-28#-∗∗∗-T90	300, 375, 450	1	No	9
		HLM-28#-∗∗∗-T90W		2		
		HLMN-28#-∗∗∗-T90	300, 375, 450	2	Yes	9
		HLMN-28#-∗∗∗-T90W				
1-Phase	25 W	HLM-28#-∗∗∗-S25	1200, 1500, 1800	1	No	9
		HLM-28#-∗∗∗-S25W				
		HLMN-28#-∗∗∗-S25	1200, 1500, 1800	2	Yes	9
		HLMN-28#-∗∗∗-S25W				
	40 W	HLM-28#-∗∗∗-S40	600, 750, 900	1	No	9
		HLM-28#-∗∗∗-S40W				
		HLMN-28#-∗∗∗-S40	600, 750, 900	2	Yes	9
		HLMN-28#-∗∗∗-S40W				
	60 W	HLM-28#-∗∗∗-S60	600, 750, 900	2	No	9
		HLM-28#-∗∗∗-S60W				
		HLMN-28#-∗∗∗-S60	600, 750, 900	2	Yes	9
		HLMN-28#-∗∗∗-S60W				
	90 W	HLM-28#-∗∗∗-S90	300, 375, 450	2	No	9
		HLM-28#-∗∗∗-S90W				
		HLMN-28#-∗∗∗-S90	300, 375, 450	2	Yes	9
		HLMN-28#-∗∗∗-S90W				

Note: A shaft arrangement (L, R, T) will be indicated as # in the nomenclature. In addition, a reduction ratio will be indicated as ∗∗∗.
Note: Please refer to page 246 for the performance table.

H2 Type Right Angle Shaft | Shaft Diameter **28** | **Foot** Mounting

The values in parentheses ( ) are the indications for gearmotors with brake.

<Figure 1>

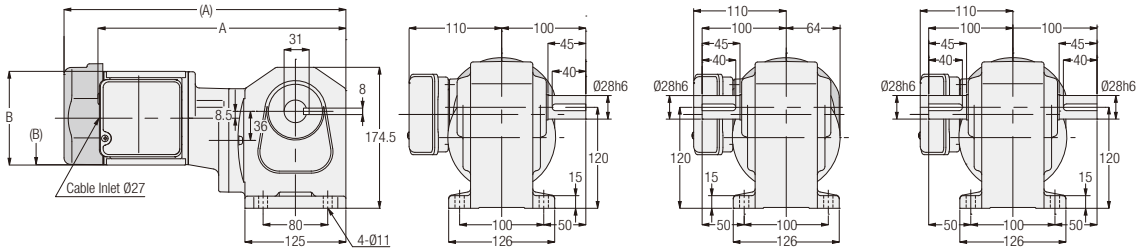

<Figure 2>

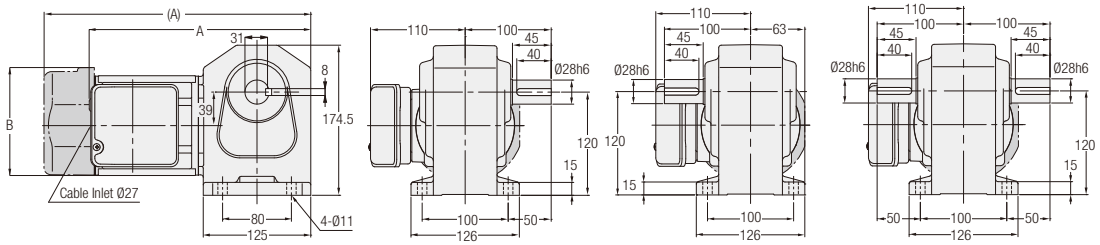

<Figure 3>

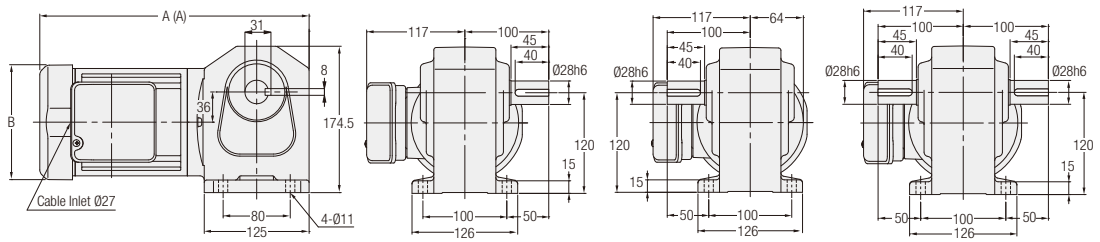

L Shaft R Shaft T Shaft

Number of Phases	Power	Part Number	Reduction Ratio	Figure Number	Brake	Approx. Weight (kg)	A	B
3-Phase	0.1 kW	H2L28#∗∗∗-MM01T◇◇TN	300, 375, 450	1	No	10	309	Ø115
		H2L28#∗∗∗-MM01T◇◇TB◆			Yes	11.5	349	□126
	0.2 kW	H2L28#∗∗∗-MM02T◇◇TN	80, 100, 120, 160, 200, 240	2	No	9.5	259.5	Ø115
		H2L28#∗∗∗-MM02T◇◇TB◆			Yes	11	310	□126
	0.4 kW	H2L28#∗∗∗-MM04T◇◇TN	5, 10, 15, 20, 25, 30, 40, 50, 60	3	No	11	321	□137
		H2L28#∗∗∗-MM04T◇◇TB◆			Yes	12.5	341	□137

Note: A shaft arrangement (L, R, T) will be indicated as # in the nomenclature. In addition, a reduction ratio will be indicated as ∗∗∗, a supply voltage/certification code will be indicated as ◇◇, and a brake specification will be indicated as ◆.

Note: Please refer to page 249 for the performance table.

H2 Type Right Angle Shaft | Shaft Diameter 28 | **Foot** Mounting

The values in parentheses ( ) are the indications for gearmotors with brake.

<Figure 1>

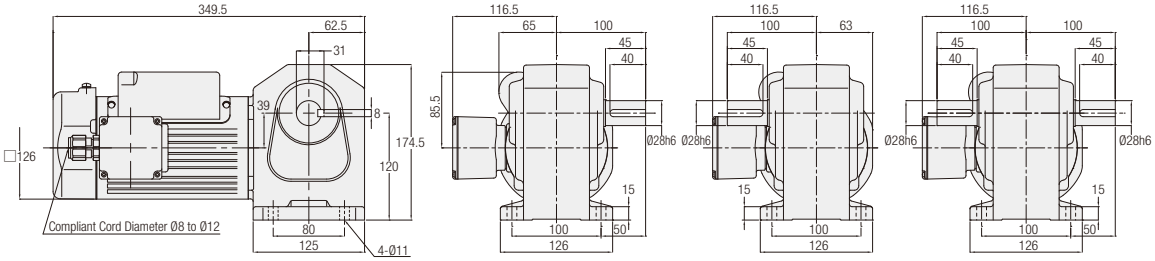

<Figure 2>

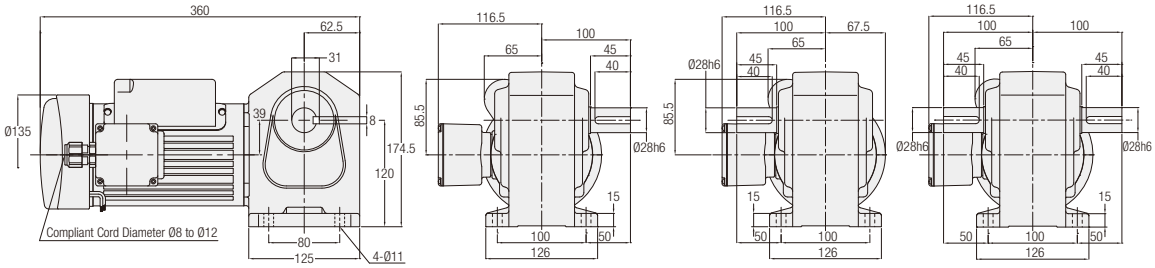

<Figure 3>

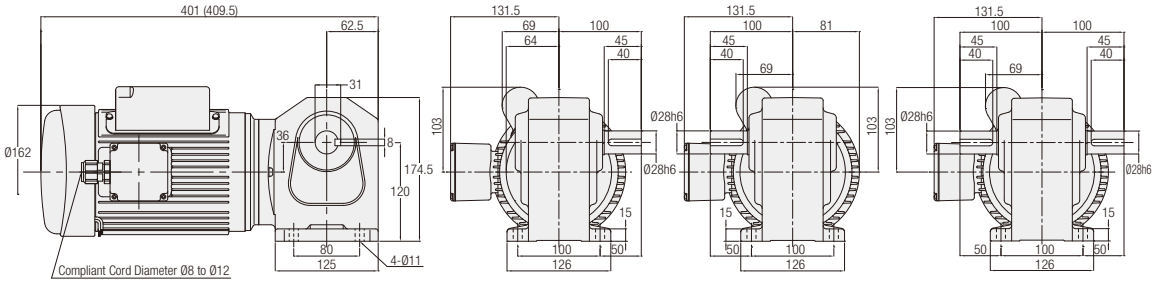

L Shaft R Shaft T Shaft

Number of Phases	Power	Part Number	Reduction Ratio	Figure Number	Brake	Approx. Weight (kg)
1-Phase	0.2 kW	H2L28#***-MM02C◇JAN	80, 100, 120, 160, 200, 240	1	No	11.5
		H2L28#***-MM02C◇JAB2	80, 100, 120, 160, 200, 240	2	Yes	13
	0.4 kW	H2L28#***-MM04C◇JAN	5, 10, 15, 20, 25, 30, 40, 50, 60	3	No	16.5
		H2L28#***-MM04C◇JAB2			Yes	19

Note: A shaft arrangement (L, R, T) will be indicated as # in the nomenclature. In addition, a reduction ratio will be indicated as *** and a supply voltage code will be indicated as ◇.

Note: Please refer to page 252 for the performance table.

H Type Right Angle Shaft | Shaft Diameter **32** | **Foot** Mounting

The values in parentheses ( ) are the indications for gearmotors with brake.

<Figure 1>

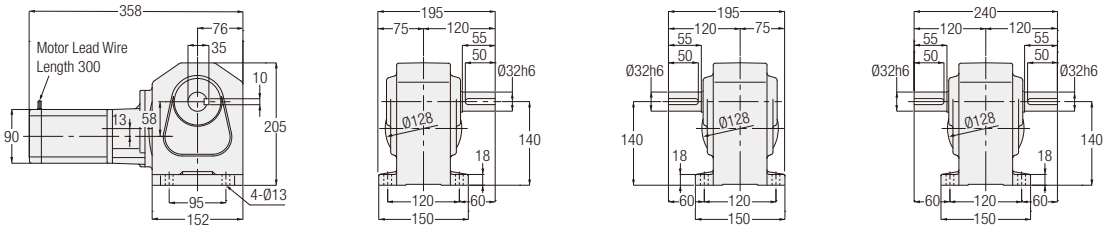

<Figure 2>

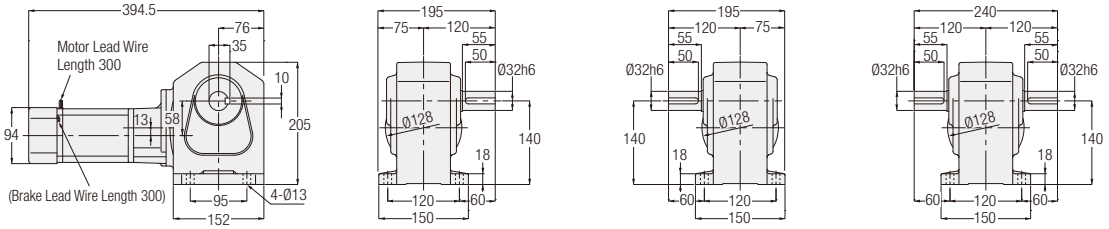

L Shaft R Shaft T Shaft

Number of Phases	Power	Part Number	Reduction Ratio	Figure Number	Brake	Approx. Weight (kg)
3-Phase	40 W	HLM-32#-∗∗∗-T40	1200, 1500, 1800	1	No	15
		HLM-32#-∗∗∗-T40W				
		HLMN-32#-∗∗∗-T40	1200, 1500, 1800	2	Yes	15
		HLMN-32#-∗∗∗-T40W				
	60 W	HLM-32#-∗∗∗-T60	1200, 1500, 1800	1	No	15
		HLM-32#-∗∗∗-T60W				
		HLMN-32#-∗∗∗-T60	1200, 1500, 1800	2	Yes	15
		HLMN-32#-∗∗∗-T60W				
	90 W	HLM-32#-∗∗∗-T90	600, 750, 900	1	No	15
		HLM-32#-∗∗∗-T90W		2		
		HLMN-32#-∗∗∗-T90	600, 750, 900	2	Yes	15
		HLMN-32#-∗∗∗-T90W				
1-Phase	40 W	HLM-32#-∗∗∗-S40	1200, 1500, 1800	1	No	15
		HLM-32#-∗∗∗-S40W				
		HLMN-32#-∗∗∗-S40	1200, 1500, 1800	2	Yes	15
		HLMN-32#-∗∗∗-S40W				
	60 W	HLM-32#-∗∗∗-S60	1200, 1500, 1800	2	No	15
		HLM-32#-∗∗∗-S60W				
		HLMN-32#-∗∗∗-S60	1200, 1500, 1800	2	Yes	15
		HLMN-32#-∗∗∗-S60W				
	90 W	HLM-32#-∗∗∗-S90	600, 750, 900	2	No	15
		HLM-32#-∗∗∗-S90W				
		HLMN-32#-∗∗∗-S90	600, 750, 900	2	Yes	15
		HLMN-32#-∗∗∗-S90W				

Note: A shaft arrangement (L, R, T) will be indicated as # in the nomenclature. In addition, a reduction ratio will be indicated as ∗∗∗.
Note: Please refer to page 247 for the performance table.

H2 Type Right Angle Shaft | Shaft Diameter 32 | **Foot** Mounting

The values in parentheses ( ) are the indications for gearmotors with brake.

<Figure 1>

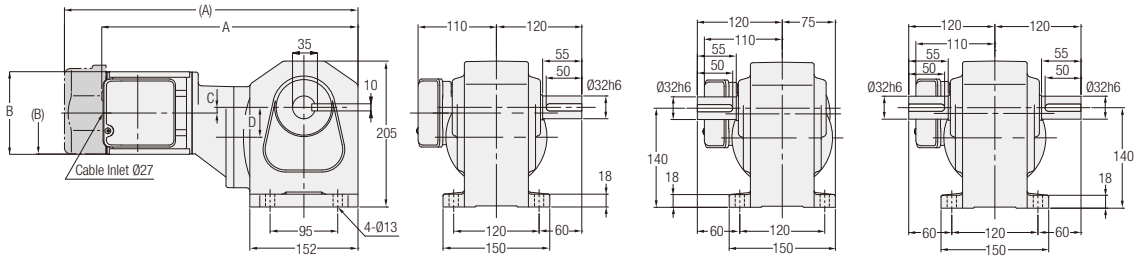

<Figure 2>

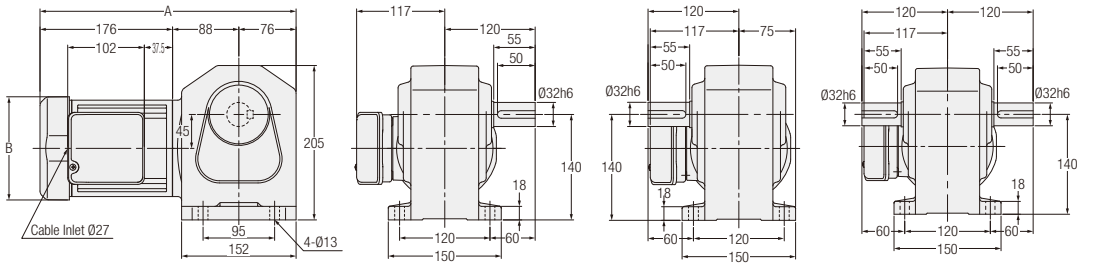

<Figure 3>

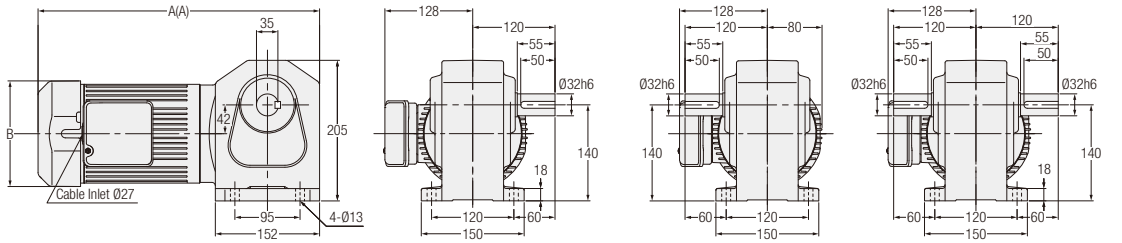

L Shaft R Shaft T Shaft

Number of Phases	Power	Part Number	Reduction Ratio	Figure Number	Brake	Approx. Weight (kg)	A	B	C	D
3-Phase	0.1 kW	H2L32#∗∗∗-MM01T◇◇TN	600, 750, 900, 1200, 1500	1	No	13	328	Ø115	17.5	45
		H2L32#∗∗∗-MM01T◇◇TB◆			Yes	14.5	368	□126	17.5	45
	0.2 kW	H2L32#∗∗∗-MM02T◇◇TN	300, 375, 450	1	No	13.5	362	Ø115	8	42
		H2L32#∗∗∗-MM02T◇◇TB◆			Yes	15	412.5	□126	8	42
	0.4 kW	H2L32#∗∗∗-MM04T◇◇TN	80, 100, 120, 160, 200, 240	2	No	14	340	□137	-	-
		H2L32#∗∗∗-MM04T◇◇TB◆			Yes	15.5	360	□137	-	-
	0.75 kW	H2L32#∗∗∗-MR08T◇◇TN	5, 10, 15, 20, 25, 30, 40, 50, 60	3	No	21	391.5	□154	-	-
		H2L32#∗∗∗-MR08T◇◇TB◆			Yes	23.5	410.5	□154	-	-

Note: A shaft arrangement (L, R, T) will be indicated as # in the nomenclature. In addition, a reduction ratio will be indicated as ∗∗∗, a supply voltage/certification code will be indicated as ◇◇, and a brake specification will be indicated as ◆.

Note: Please refer to page 249 for the performance table.

H2 Type Right Angle Shaft | Shaft Diameter 32 | **Foot** Mounting

The values in parentheses ( ) are the indications for gearmotors with brake.

<Figure 1>

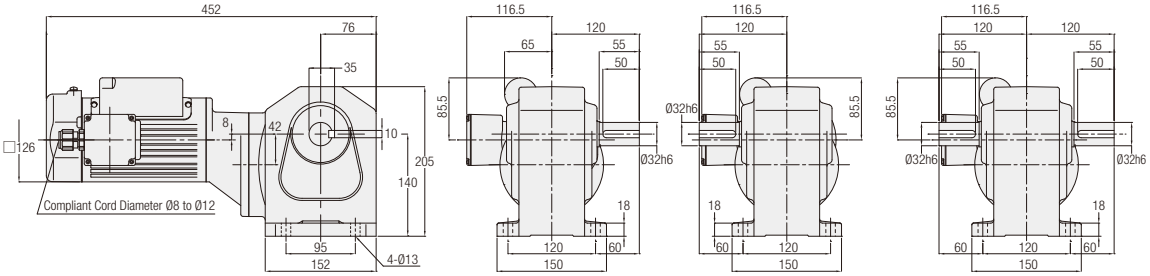

<Figure 2>

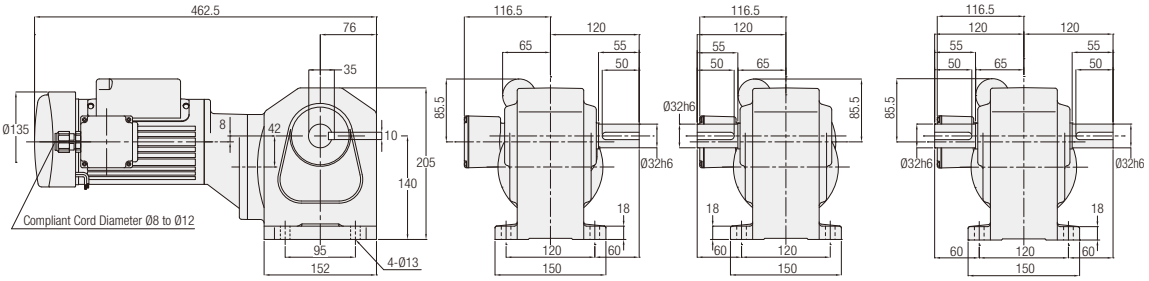

<Figure 3>

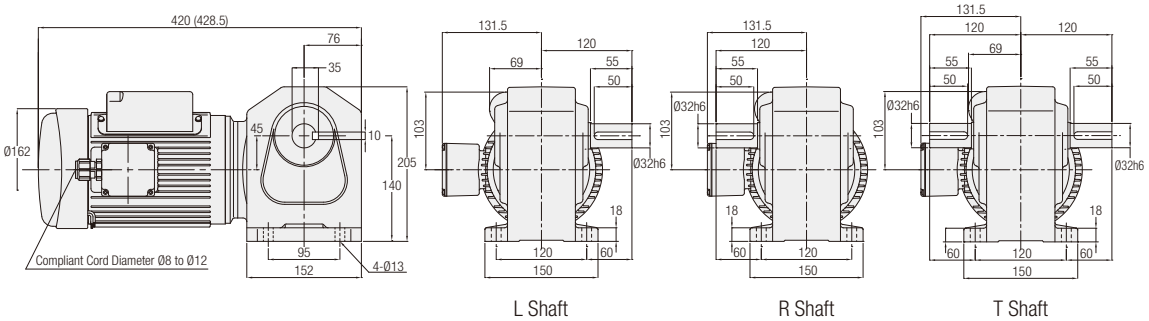

Number of Phases	Power	Part Number	Reduction Ratio	Figure Number	Brake	Approx. Weight (kg)
1-Phase	0.2 kW	H2L32#∗∗∗-MM02C◇JAN	300, 375, 450	1	No	15.5
		H2L32#∗∗∗-MM02C◇JAB2	300, 375, 450	2	Yes	17
	0.4 kW	H2L32#∗∗∗-MM04C◇JAN	80, 100, 120, 160, 200, 240	3	No	19.5
		H2L32#∗∗∗-MM04C◇JAB2			Yes	22

Note: A shaft arrangement (L, R, T) will be indicated as # in the nomenclature. In addition, a reduction ratio will be indicated as ∗∗∗ and a supply voltage code will be indicated as ◇.

Note: Please refer to page 252 for the performance table.

H Type Right Angle Shaft | Shaft Diameter **40** | **Foot** Mounting

The values in parentheses ( ) are the indications for gearmotors with brake.

<Figure 1>

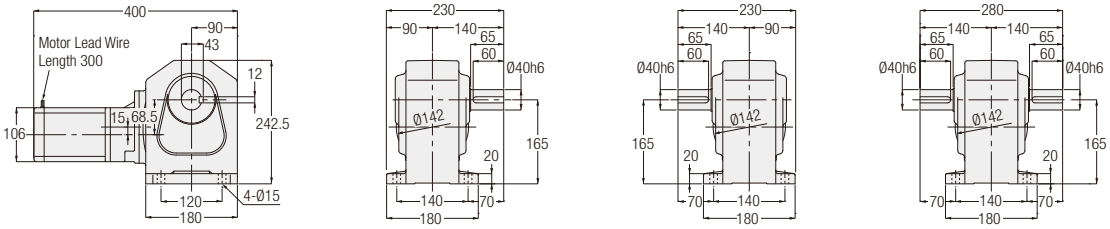

<Figure 2>

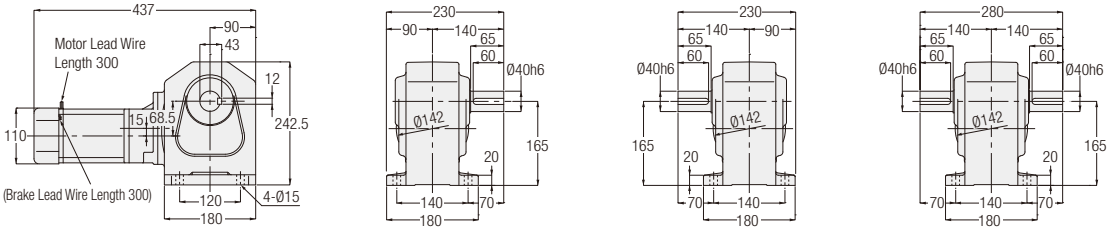

L Shaft R Shaft T Shaft

Number of Phases	Power	Part Number	Reduction Ratio	Figure Number	Brake	Approx. Weight (kg)
3-Phase	90 W	HLM-40#-∗∗∗-T90	1200, 1500, 1800	1	No	22
		HLM-40#-∗∗∗-T90W				
		HLMN-40#-∗∗∗-T90	1200, 1500, 1800	2	Yes	22
		HLMN-40#-∗∗∗-T90W				
1-Phase	90 W	HLM-40#-∗∗∗-S90	1200, 1500, 1800	2	No	22
		HLM-40#-∗∗∗-S90W				
		HLMN-40#-∗∗∗-S90			Yes	22
		HLMN-40#-∗∗∗-S90W				

Note: A shaft arrangement (L, R, T) will be indicated as # in the nomenclature. In addition, a reduction ratio will be indicated as ∗∗∗.
Note: Please refer to page 248 for the performance table.

H2 Type Right Angle Shaft | Shaft Diameter 40 | **Foot** Mounting

The values in parentheses ( ) are the indications for gearmotors with brake.

<Figure 1>

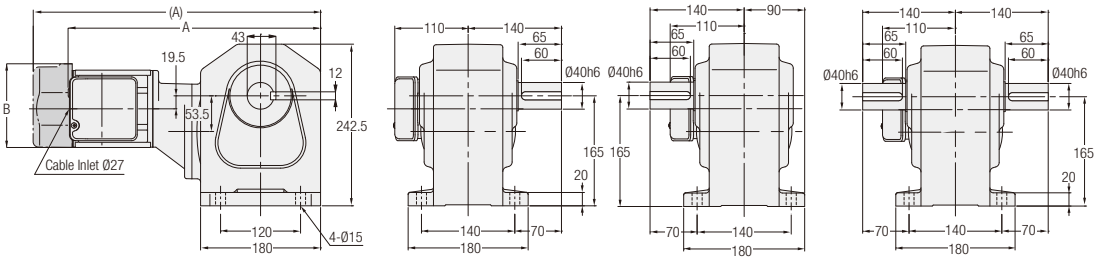

<Figure 2>

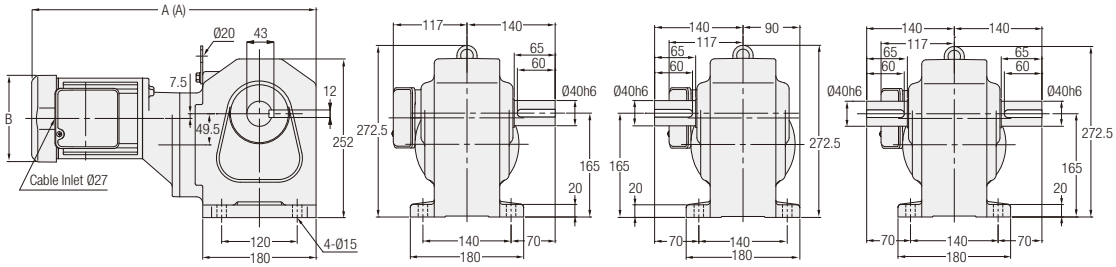

<Figure 3>

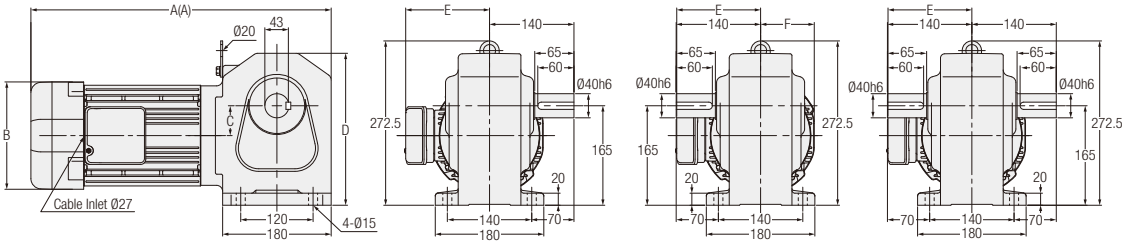

L Shaft R Shaft T Shaft

Note: Gearmotors with a motor power of 0.75 kW does not include the hanging plate.

Number of Phases	Power	Part Number	Reduction Ratio	Figure Number	Brake	Approx. Weight (kg)	A	B	C	D	E	F
3-Phase	0.2 kW	H2L40#***-MM02T◇◇TN	600, 750, 900, 1200, 1500	1	No	22	380.5	Ø115	-	-	-	-
		H2L40#***-MM02T◇◇TB◆			Yes	23.5	431	□126	-	-	-	-
	0.4 kW	H2L40#***-MM04T◇◇TN	300, 375, 450	2	No	24.5	451.5	□137	-	-	-	-
		H2L40#***-MM04T◇◇TB◆			Yes	26	471.5	□137	-	-	-	-
	0.75 kW	H2L40#***-MR08T◇◇TN	80, 100, 120, 160, 200, 240	3	No	29.5	410	□154	53.5	242.5	128	80
		H2L40#***-MR08T◇◇TB◆			Yes	32	429	□154	53.5	242.5	128	80
	1.5 kW	H2L40#***-MR15T◇◇TN	5, 10, 15, 20, 25, 30, 40, 50, 60	3	No	36.5	469	□178	49.5	252	139	89
		H2L40#***-MR15T◇◇TB◆			Yes	40	498	□178	49.5	252	139	89

Note: A shaft arrangement (L, R, T) will be indicated as # in the nomenclature. In addition, a reduction ratio will be indicated as ***, a supply voltage/certification code will be indicated as ◇◇, and a brake specification will be indicated as ◆.

Note: Please refer to page 249 for the performance table.

H2 Type Right Angle Shaft | Shaft Diameter 40 | **Foot** Mounting

The values in parentheses ( ) are the indications for gearmotors with brake.

<Figure 1>

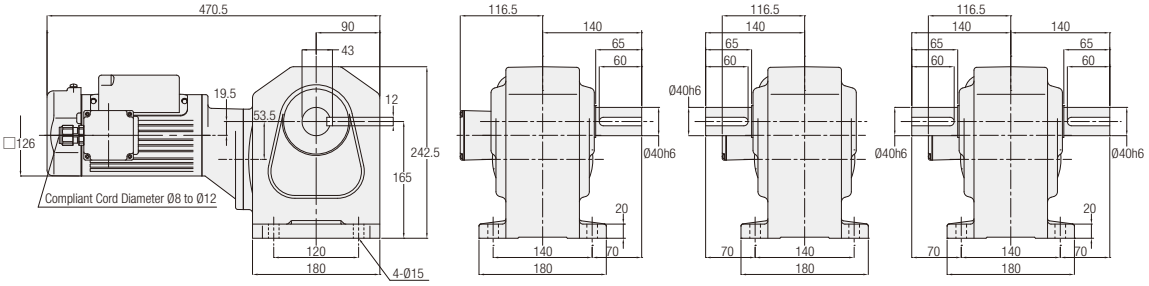

<Figure 2>

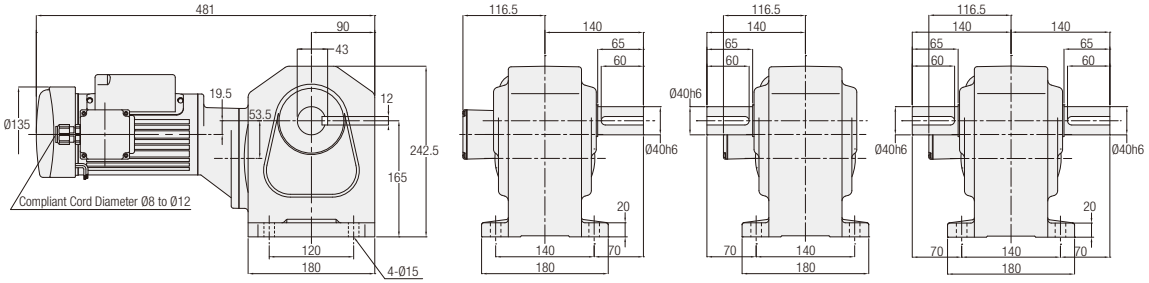

<Figure 3>

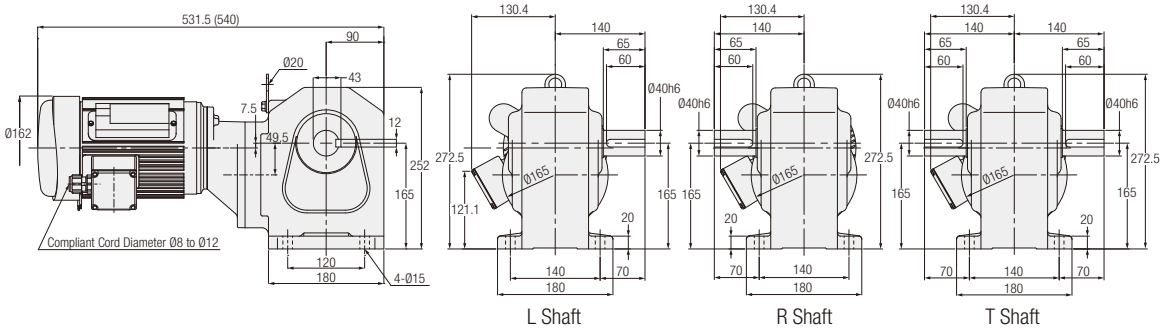

Number of Phases	Power	Part Number	Reduction Ratio	Figure Number	Brake	Approx. Weight (kg)
1-Phase	0.2 kW	H2L40#∗∗∗-MM02C◇JAN	600, 750, 900, 1200, 1500	1	No	24
		H2L40#∗∗∗-MM02C◇JAB2	600, 750, 900, 1200, 1500	2	Yes	24.5
	0.4 kW	H2L40#∗∗∗-MM04C◇JAN	300, 375, 450	3	No	30
		H2L40#∗∗∗-MM04C◇JAB2			Yes	32.5

Note: A shaft arrangement (L, R, T) will be indicated as # in the nomenclature. In addition, a reduction ratio will be indicated as ∗∗∗ and a supply voltage code will be indicated as ◇.

Note: Please refer to page 252 for the performance table.

H2 Type Right Angle Shaft | Shaft Diameter **50** | **Foot** Mounting

The values in parentheses ( ) are the indications for gearmotors with brake.

<Figure 1>

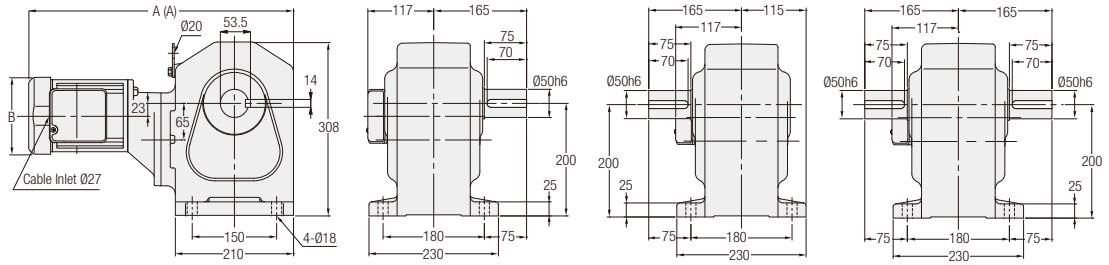

<Figure 2>

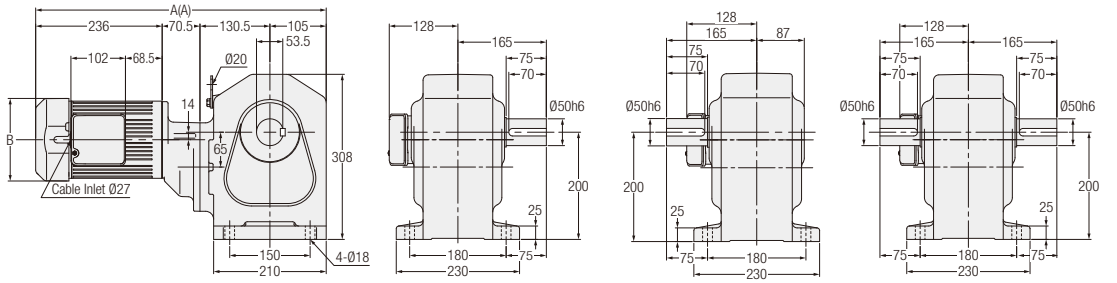

<Figure 3>

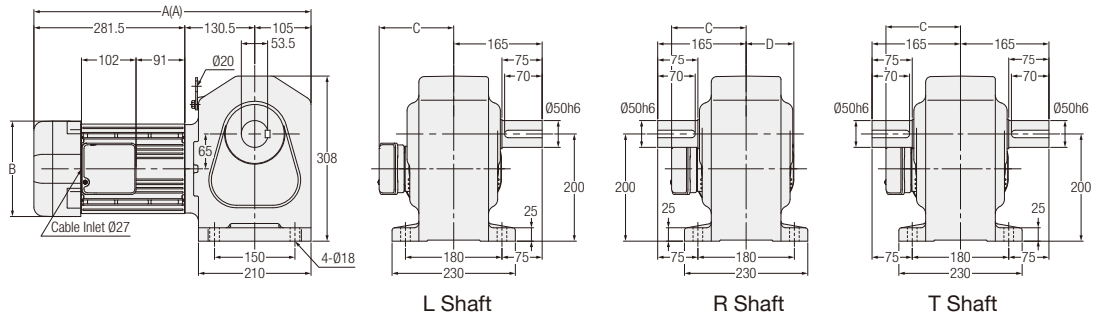

L Shaft R Shaft T Shaft

Number of Phases	Power	Part Number	Reduction Ratio	Figure Number	Brake	Approx. Weight (kg)	A	B	C	D
3-Phase	0.4 kW	H2L50#∗∗∗-MM04T◇◇TN	600, 750, 900, 1200, 1500	1	No	54.5	470.5	□137	-	-
		H2L50#∗∗∗-MM04T◇◇TB◆			Yes	56	490.5	□137	-	-
	0.75 kW	H2L50#∗∗∗-MR08T◇◇TN	300, 375, 450	2	No	62	523	□154	-	-
		H2L50#∗∗∗-MR08T◇◇TB◆			Yes	64.5	542	□154	-	-
	1.5 kW	H2L50#∗∗∗-MR15T◇◇TN	80, 100, 120, 160, 200, 240	3	No	65.5	488	□178	139	89
		H2L50#∗∗∗-MR15T◇◇TB◆			Yes	69	517	□178	139	89
	2.2 kW	H2L50#∗∗∗-MR22T◇◇TN	5, 10, 15, 20, 25, 30, 40, 50, 60, 80, 100, 120	3	No	72.5	537.5	□192	149	96
		H2L50#∗∗∗-MR22T◇◇TB◆			Yes	76	566.5	□192	149	96

Note: A shaft arrangement (L, R, T) will be indicated as # in the nomenclature. In addition, a reduction ratio will be indicated as ∗∗∗, a supply voltage/certification code will be indicated as ◇◇, and a brake specification will be indicated as ◆.

Note: Please refer to page 250 for the performance table.

H2 Type Right Angle Shaft | Shaft Diameter 50 | **Foot** Mounting

The values in parentheses ( ) are the indications for gearmotors with brake.

<Figure 1>

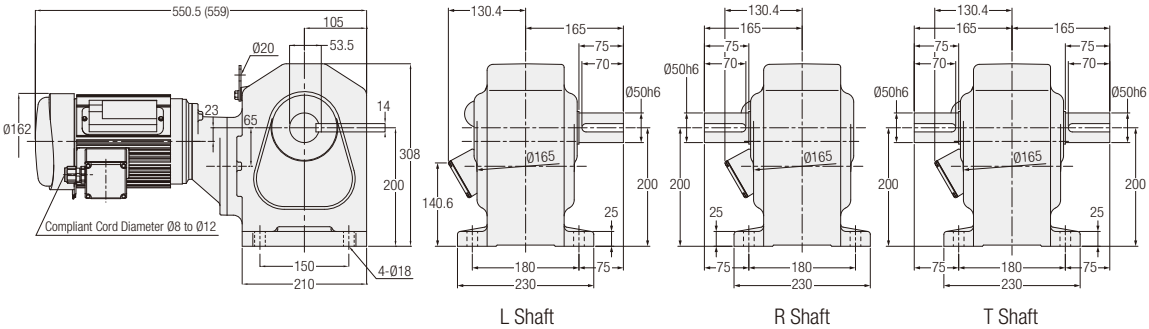

Number of Phases	Power	Part Number	Reduction Ratio	Figure Number	Brake	Approx. Weight (kg)
1-Phase	0.4 kW	H2L50#∗∗∗-MM04C◇JAN	600, 750, 900, 1200, 1500	1	No	60
		H2L50#∗∗∗-MM04C◇JAB2			Yes	62.5

Note: A shaft arrangement (L, R, T) will be indicated as # in the nomenclature. In addition, a reduction ratio will be indicated as ∗∗∗ and a supply voltage code will be indicated as ◇.

Note: Please refer to page 253 for the performance table.

H Type Right Angle Shaft | Shaft Diameter **15** | **Flange** Mounting

The values in parentheses ( ) are the indications for gearmotors with brake.

<Figure 1>

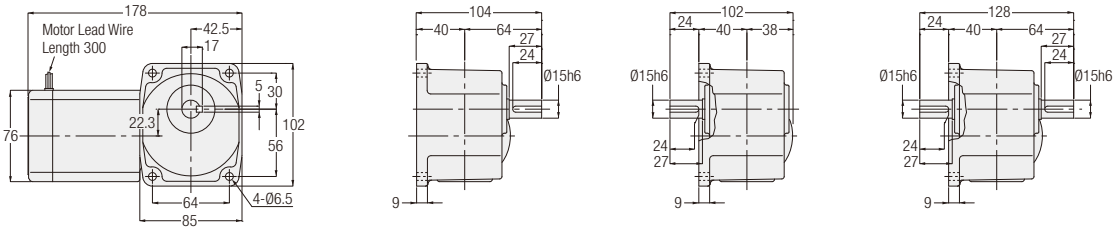

<Figure 2>

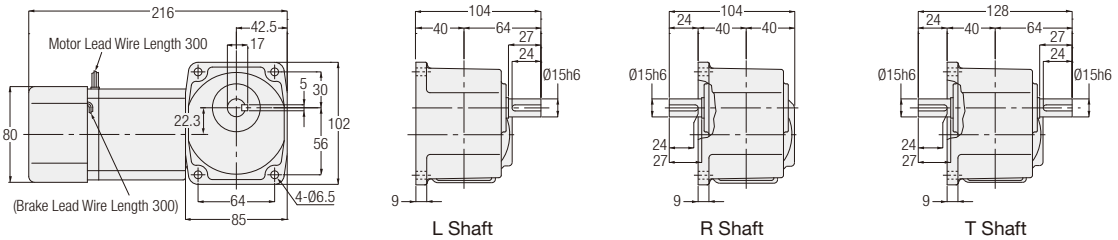

Number of Phases	Power	Part Number	Reduction Ratio	Figure Number	Brake	Approx. Weight (kg)
3-Phase	15 W	HFM-15#-***-T15	10, 15, 20, 25, 30, 40, 50, 60, 80, 100, 120, 160, 200, 240	1	No	3
		HFM-15#-***-T15W				
		HFMN-15#-***-T15	10, 15, 20, 25, 30, 40, 50, 60, 80, 100, 120, 160, 200, 240	2	Yes	3
		HFMN-15#-***-T15W				
	25 W	HFM-15#-***-T25	10, 15, 20, 25, 30, 40, 50, 60, 80, 100, 120, 160, 200, 240	1	No	3
		HFM-15#-***-T25W				
		HFMN-15#-***-T25	10, 15, 20, 25, 30, 40, 50, 60, 80, 100, 120, 160, 200, 240	2	Yes	3
		HFMN-15#-***-T25W				
	40 W	HFM-15#-***-T40	10, 15, 20, 25, 30, 40, 50, 60, 80, 100, 120	1	No	3
		HFM-15#-***-T40W		2		
		HFMN-15#-***-T40	10, 15, 20, 25, 30, 40, 50, 60, 80, 100, 120	2	Yes	3
		HFMN-15#-***-T40W				
	60 W	HFM-15#-***-T60	10, 15, 20, 25, 30, 40, 50, 60	2	No	3
		HFMN-15#-***-T60		2	Yes	
1-Phase	15 W	HFM-15#-***-S15	10, 15, 20, 25, 30, 40, 50, 60, 80, 100, 120, 160, 200, 240	1	No	3
		HFM-15#-***-S15W				
		HFMN-15#-***-S15	10, 15, 20, 25, 30, 40, 50, 60, 80, 100, 120, 160, 200, 240	2	Yes	3
		HFMN-15#-***-S15W				
	25 W	HFM-15#-***-S25	10, 15, 20, 25, 30, 40, 50, 60, 80, 100, 120, 160, 200, 240	1	No	3
		HFM-15#-***-S25W				
		HFMN-15#-***-S25	10, 15, 20, 25, 30, 40, 50, 60, 80, 100, 120, 160, 200, 240	2	Yes	3
		HFMN-15#-***-S25W				
	40 W	HFM-15#-***-S40	10, 15, 20, 25, 30, 40, 50, 60, 80, 100, 120	2	No	3
		HFM-15#-***-S40W				
		HFMN-15#-***-S40	10, 15, 20, 25, 30, 40, 50, 60, 80, 100, 120	2	Yes	3
		HFMN-15#-***-S40W				

Note: A shaft arrangement (L, R, T) will be indicated as # in the nomenclature. In addition, a reduction ratio will be indicated as ***.
Note: Please refer to page 246 for the performance table.

H Type Right Angle Shaft | Shaft Diameter **18** | **Flange** Mounting

The values in parentheses ( ) are the indications for gearmotors with brake.

<Figure 1>

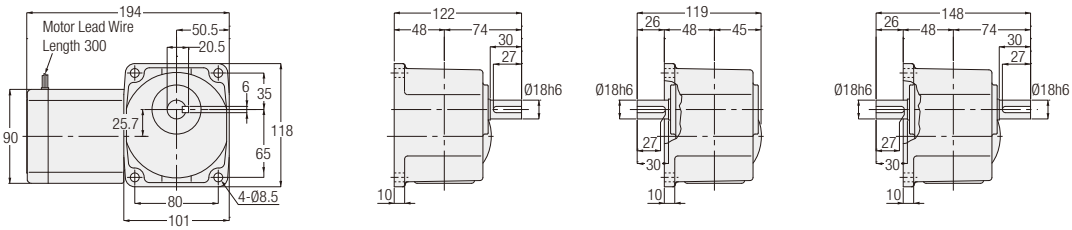

<Figure 2>

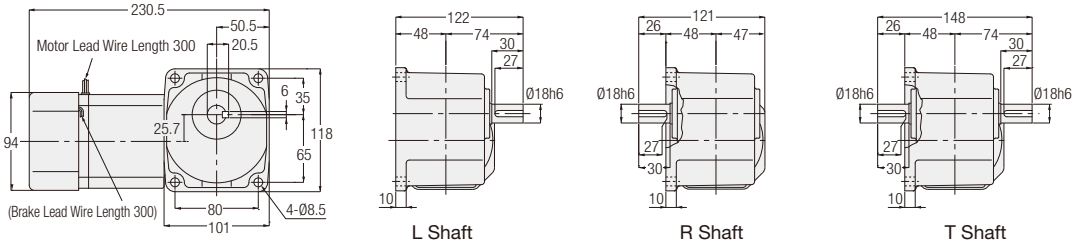

L Shaft R Shaft T Shaft

Number of Phases	Power	Part Number	Reduction Ratio	Figure Number	Brake	Approx. Weight (kg)
3-Phase	40 W	HFM-18#-***-T40	160, 200, 240	1	No	4
		HFM-18#-***-T40W				
		HFMN-18#-***-T40	160, 200, 240	2	Yes	4
		HFMN-18#-***-T40W				
	60 W	HFM-18#-***-T60	80, 100, 120, 160, 200, 240	1	No	4
		HFM-18#-***-T60W				
		HFMN-18#-***-T60	80, 100, 120, 160, 200, 240	2	Yes	4
		HFMN-18#-***-T60W				
	90 W	HFM-18#-***-T90	10, 15, 20, 25, 30, 40, 50, 60, 80, 100, 120, 160, 200, 240	1	No	4
		HFM-18#-***-T90W		2		
		HFMN-18#-***-T90	10, 15, 20, 25, 30, 40, 50, 60, 80, 100, 120, 160, 200, 240	2	Yes	4
		HFMN-18#-***-T90W				
1-Phase	40 W	HFM-18#-***-S40	160, 200, 240	1	No	4
		HFM-18#-***-S40W				
		HFMN-18#-***-S40	160, 200, 240	2	Yes	4
		HFMN-18#-***-S40W				
	60 W	HFM-18#-***-S60	10, 15, 20, 25, 30, 40, 50, 60, 80, 100, 120, 160, 200, 240	2	No	4
		HFM-18#-***-S60W				
		HFMN-18#-***-S60	80, 100, 120, 160, 200, 240	2	Yes	4
		HFMN-18#-***-S60W				
	90 W	HFM-18#-***-S90	10, 15, 20, 25, 30, 40, 50, 60, 80, 100, 120, 160, 200, 240	2	No	4
		HFM-18#-***-S90W				
		HFMN-18#-***-S90	10, 15, 20, 25, 30, 40, 50, 60, 80, 100, 120, 160, 200, 240	2	Yes	4
		HFMN-18#-***-S90W				

Note: A shaft arrangement (L, R, T) will be indicated as # in the nomenclature. In addition, a reduction ratio will be indicated as ***.
Note: Please refer to page 247 for the performance table.

H Type Right Angle Shaft | Shaft Diameter 22 | **Flange** Mounting

The values in parentheses ( ) are the indications for gearmotors with brake.

<Figure 1>

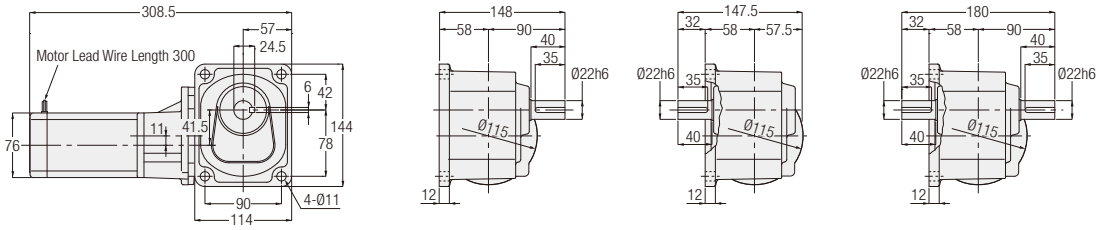

<Figure 2>

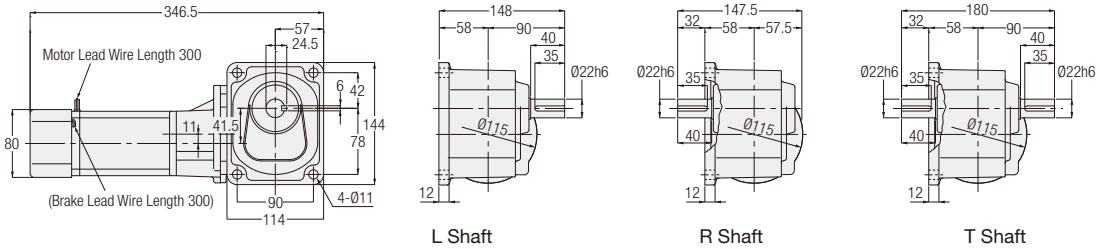

L Shaft R Shaft T Shaft

Number of Phases	Power	Part Number	Reduction Ratio	Figure Number	Brake	Approx. Weight (kg)
3-Phase	15 W	HFM-22#-∗∗∗-T15	300, 375, 450, 600, 750, 900, 1200, 1500, 1800	1	No	6
		HFM-22#-∗∗∗-T15W				
		HFMN-22#-∗∗∗-T15	300, 375, 450, 600, 750, 900, 1200, 1500, 1800	2	Yes	6
		HFMN-22#-∗∗∗-T15W				
	25 W	HFM-22#-∗∗∗-T25	300, 375, 450, 600, 750, 900	1	No	6
		HFM-22#-∗∗∗-T25W				
		HFMN-22#-∗∗∗-T25	300, 375, 450, 600, 750, 900	2	Yes	6
		HFMN-22#-∗∗∗-T25W				
	40 W	HFM-22#-∗∗∗-T40	300, 375, 450	1	No	6
		HFM-22#-∗∗∗-T40W		2		
		HFMN-22#-∗∗∗-T40	300, 375, 450	2	Yes	6
		HFMN-22#-∗∗∗-T40W				
	60 W	HFM-22#-∗∗∗-T60	300, 375, 450	2	No	6
		HFM-22#-∗∗∗-T60W				
		HFMN-22#-∗∗∗-T60	300, 375, 450	2	Yes	6
		HFMN-22#-∗∗∗-T60W				
1-Phase	15 W	HFM-22#-∗∗∗-S15	300, 375, 450, 600, 750, 900, 1200, 1500, 1800	1	No	6
		HFM-22#-∗∗∗-S15W				
		HFMN-22#-∗∗∗-S15	300, 375, 450, 600, 750, 900, 1200, 1500, 1800	2	Yes	6
		HFMN-22#-∗∗∗-S15W				
	25 W	HFM-22#-∗∗∗-S25	300, 375, 450, 600, 750, 900	1	No	6
		HFM-22#-∗∗∗-S25W				
		HFMN-22#-∗∗∗-S25	300, 375, 450, 600, 750, 900	2	Yes	6
		HFMN-22#-∗∗∗-S25W				
	40 W	HFM-22#-∗∗∗-S40	300, 375, 450	2	No	6
		HFM-22#-∗∗∗-S40W				
		HFMN-22#-∗∗∗-S40	300, 375, 450	2	Yes	6
		HFMN-22#-∗∗∗-S40W				
	60 W	HFM-22#-∗∗∗-S60	300, 375, 450	2	No	6
		HFM-22#-∗∗∗-S60W				
		HFMN-22#-∗∗∗-S60	300, 375, 450	2	Yes	6
		HFMN-22#-∗∗∗-S60W				

Note: A shaft arrangement (L, R, T) will be indicated as # in the nomenclature. In addition, a reduction ratio will be indicated as ∗∗∗.
Note: Please refer to page 246 for the performance table.

H2 Type Right Angle Shaft | Shaft Diameter 22 | **Flange** Mounting

The values in parentheses ( ) are the indications for gearmotors with brake.

<Figure 1>

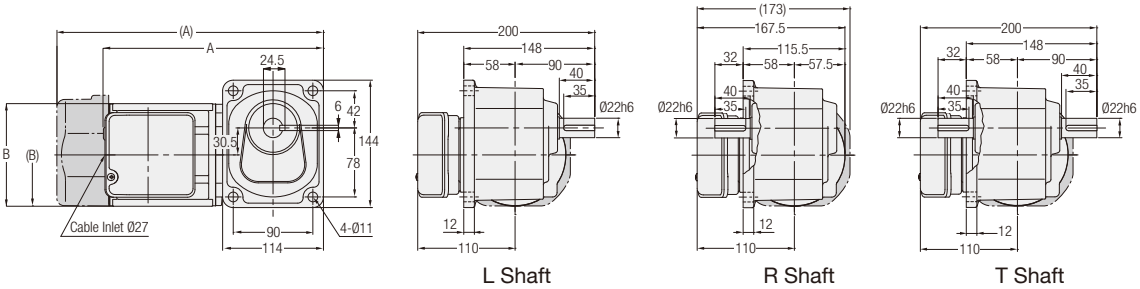

L Shaft R Shaft T Shaft

Number of Phases	Power	Part Number	Reduction Ratio	Figure Number	Brake	Approx. Weight (kg)	A	B
3-Phase	0.1 kW	H2F22#∗∗∗-MM01T◇◇TN	5, 10, 15, 20, 25, 30, 40, 50, 60, 80, 100, 120, 160, 200, 240	1	No	6.5	236	Ø115
		H2F22#∗∗∗-MM01T◇◇TB◆			Yes	8	276	□126
	0.2 kW	H2F22#∗∗∗-MM02T◇◇TN	5, 10, 15, 20, 25, 30, 40, 50, 60	1	No	7.5	251	Ø115
		H2F22#∗∗∗-MM02T◇◇TB◆			Yes	9	301.5	□126

Note: A shaft arrangement (L, R, T) will be indicated as # in the nomenclature. In addition, a reduction ratio will be indicated as ∗∗∗, a supply voltage/certification code will be indicated as ◇◇, and a brake specification will be indicated as ◆.

Note: Please refer to page 249 for the performance table.

H2 Type Right Angle Shaft | Shaft Diameter 22 | **Flange** Mounting

The values in parentheses ( ) are the indications for gearmotors with brake.

<Figure 1>

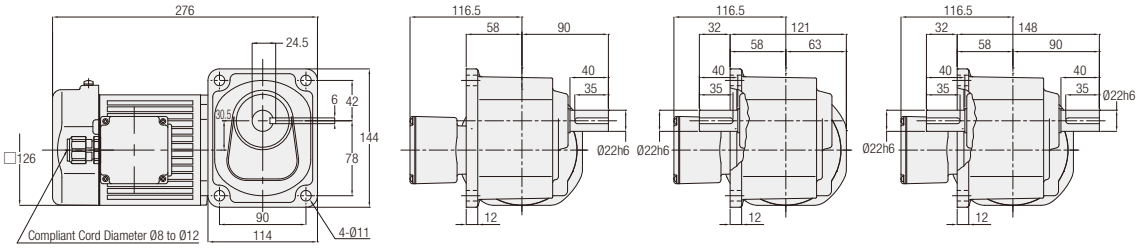

<Figure 2>

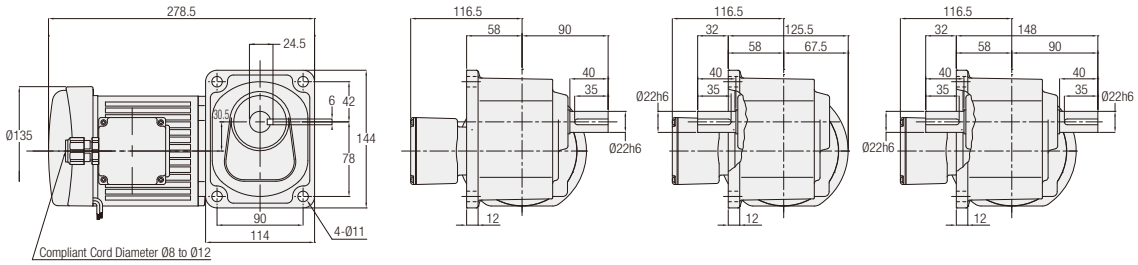

<Figure 3>

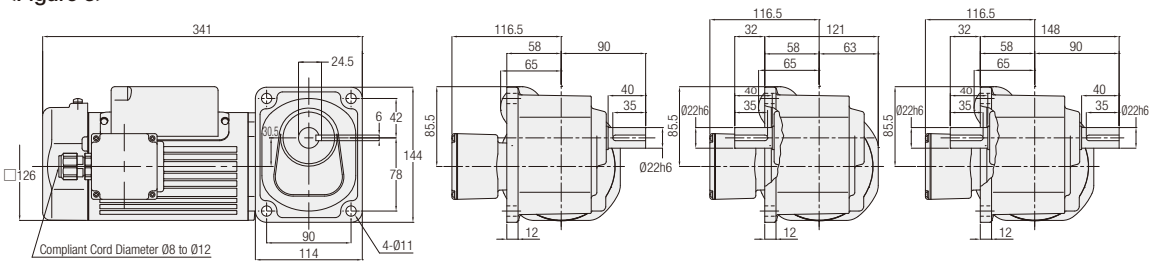

<Figure 4>

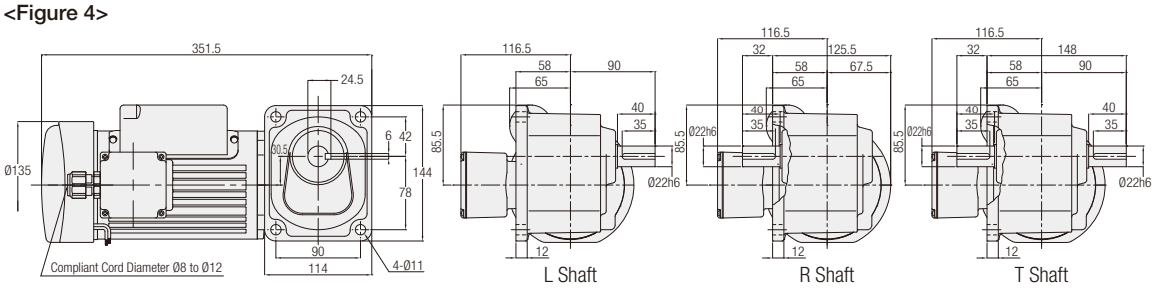

Number of Phases	Power	Part Number	Reduction Ratio	Figure Number	Brake	Approx. Weight (kg)
1-Phase	0.1 kW	H2F22#∗∗∗-MM01S◇JAN	5, 10, 15, 20, 25, 30, 40, 50, 60, 80, 100, 120, 160, 200, 240	1	No	7
		H2F22#∗∗∗-MM01S◇JAB2	5, 10, 15, 20, 25, 30, 40, 50, 60, 80, 100, 120, 160, 200, 240	2	Yes	9.5
	0.2 kW	H2F22#∗∗∗-MM02C◇JAN	5, 10, 15, 20, 25, 30, 40, 50, 60	3	No	8
		H2F22#∗∗∗-MM02C◇JAB2	5, 10, 15, 20, 25, 30, 40, 50, 60	4	Yes	11

Note: A shaft arrangement (L, R, T) will be indicated as # in the nomenclature. In addition, a reduction ratio will be indicated as ∗∗∗ and a supply voltage code will be indicated as ◇.

Note: Please refer to page 252 for the performance table.

MEMO

2. IP65 Gearmotors
IP65 Gearmotors with Brake

2-1. Motor Characteristics Table

H Type 3-Phase Standard Voltage

Series	Power (W)	Voltage (V)	Frequency (Hz)	Frame Size	Rated Current (A)	Rated Speed (r/min)	Startup Current (A)
MINI	15	200/200/220	50/60/60	15	0.14/0.13/0.13	1350/1550/1600	0.30/0.28/0.31
	25	200/200/220	50/60/60	15	0.21/0.19/0.19	1350/1550/1600	0.44/0.42/0.46
	40	200/200/220	50/60/60	15	0.29/0.27/0.27	1350/1550/1600	0.67/0.62/0.68
				18	0.27/0.26/0.26	1350/1550/1550	0.73/0.69/0.76
	60	200/200/220	50/60/60	18	0.40/0.36/0.36	1350/1550/1600	1.04/0.97/1.07
	90	200/200/220	50/60/60	18	0.51/0.48/0.48	1350/1550/1550	1.42/1.36/1.49

The rated current in the motor characteristics table and performance table is the current data for the motor operating without a gearbox.
With regard to gearmotors with a brake, it is necessary to consider the current value flowing through the brake as needed.
For more details, please contact your nearest Sales Office or the CS Center.

H Type 1-Phase Standard Voltage

Series	Power (W)	Voltage (V)	Frequency (Hz)	Frame Size	Rated Current (A)	Rated Speed (r/min)	Startup Current (A)	Capacitor (μF)
MINI	15	100/100	50/60	15	0.39/0.35	1350/1650	0.72/0.67	5
	25	100/100	50/60	15	0.48/0.48	1350/1600	0.86/0.80	7
	40	100/100	50/60	18	0.61/0.66	1350/1650	1.43/1.36	10

The rated current in the motor characteristics table and performance table is the current data for the motor operating without a gearbox.
With regard to gearmotors with a brake, it is necessary to consider the current value flowing through the brake as needed.
For more details, please contact your nearest Sales Office or the CS Center.

2-1. Motor Characteristics Table

H2 Type 3-Phase Standard Voltage/High Voltage (400 V Class)/Special Voltage

Series	Power	Power Supply/ Certification Codes	Voltage (V)	Frequency (Hz)	Rated Current (A)	Startup Current (A)	Rated Speed (r/min)
MID	0.1 kW	NN	200/200/220	50/60/60	0.61/0.54/0.54	2.39/2.27/2.52	1410/1690/1710
		WN	380/400/400/440	50/50/60/60	0.31/0.31/0.28/0.28	1.12/1.18/1.12/1.22	1400/1410/1690/1720
		KN	220/380	60/60	0.52/0.30	1.90/1.10	1680/1680
		CN	220/230/380	50/50/50	0.55/0.54/0.31	1.94/2.03/1.12	1400/1410/1400
		DN	220/220/380/380	50/60/50/60	0.55/0.52/0.31/0.30	1.94/1.90/1.12/1.10	1400/1680/1400/1680
		EN	415/440/480	50/50/60	0.30/0.29/0.26	1.06/1.12/1.17	1390/1420/1720
		AN	208/230/460/400	60/60/60/50	0.54/0.57/0.29/0.31	2.35/2.62/1.26/1.21	1690/1730/1730/1410
		MA	575	60	0.20	0.87	1700
	0.2 kW IE2	NN	200/200/220	50/60/60	1.1/1.0/1.0	4.70/4.35/4.85	1400/1680/1700
		WN	380/400/400/440	50/50/60/60	0.56/0.56/0.50/0.50	2.29/2.38/2.29/2.48	1390/1400/1680/1710
		KN	220/380	60/60	0.93/0.52	3.70/2.20	1680/1680
		CN	220/230/380	50/50/50	0.99/0.98/0.56	3.97/4.15/2.29	1400/1410/1390
		DN	220/220/380/380	50/60/50/60	0.99/0.93/0.56/0.52	3.97/3.70/2.29/2.20	1400/1680/1390/1680
		EN	415/440/480	50/50/60	0.50/0.50/0.45	1.75/1.86/2.00	1370/1400/1700
		AN	208/230/460/400	60/60/60/50	1.0/1.0/0.50/0.56	4.78/5.16/2.56/2.44	1680/1720/1720/1400
		MA	575	60	0.40	1.78	1710
	0.4 kW IE2	NN	200/200/220	50/60/60	2.1/1.8/1.8	9.60/8.54/9.21	1400/1680/1700
		WN	380/400/400/440	50/50/60/60	1.0/1.0/0.9/0.9	4.43/4.64/4.24/4.85	1390/1400/1680/1710
		KN	220/380	60/60	1.7/1.0	7.10/4.09	1670/1670
		CN	220/230/380	50/50/50	1.8/1.8/1.0	7.63/8.04/4.43	1390/1400/1390
		DN	220/220/380/380	50/60/50/60	1.8/1.7/1.0/1.0	7.63/7.10/4.43/4.09	1390/1670/1390/1670
		EN	415/440/480	50/50/60	0.96/0.95/0.82	4.45/4.56/4.52	1390/1410/1680
		AN	208/230/460/400	60/60/60/50	1.8/1.8/0.9/1.0	9.21/9.82/5.06/4.62	1680/1720/1720/1400
		MA	575	60	0.68	3.94	1700
	0.75 kW IE3	NN	200/200/220	50/60/60	3.5/3.2/3.1	21.8/19.0/21.1	1450/1740/1750
		WN	380/400/400/440	50/50/60/60	1.73/1.72/1.58/1.54	10.2/10.8/9.8/10.7	1440/1450/1740/1750
		KN	220/380	60/60	2.9/1.7	16.9/9.8	1740/1740
		CN	220/230/380	50/50/50	3.0/3.0/1.7	17.8/18.7/10.3	1450/1450/1440
		DN	220/220/380/380	50/60/50/60	3.1/2.9/1.8/1.7	19.3/16.9/11.2/9.8	1450/1740/1450/1740
		EN	415/440/480	50/50/60	1.54/1.52/1.36	8.6/9.3/9.0	1440/1450/1750
		UN	230/460/400	60/60/50	3.1/1.5/1.7	22.3/11.2/10.8	1760/1760/1450
		MA	575	60	1.16	7.2	1750
	1.5 kW IE3	NN	200/200/220	50/60/60	6.7/6.1/5.9	45.6/40.3/45.1	1450/1740/1760
		WN	380/400/400/440	50/50/60/60	3.4/3.4/3.1/3.0	21.9/23.2/20.4/22.8	1450/1450/1750/1760
		KN	220/380	60/60	5.9/3.4	45.1/25.8	1760/1760
		CN	220/230/380	50/50/50	5.9/5.9/3.4	38.5/40.4/22.1	1450/1450/1450
		EN	415/440/480	50/50/60	3.1/3.1/2.8	20.8/22.2/21.2	1450/1460/1760
		UN	230/460/400	60/60/50	5.9/2.9/3.3	44.9/22.6/23.2	1760/1760/1450
		MA	575	60	2.2	17.0	1760
	2.2 kW IE3	NN	200/200/220	50/60/60	9.3/8.6/8.2	70.3/56.9/63.7	1470/1760/1770
		WN	380/400/400/440	50/50/60/60	4.5/4.4/4.2/3.9	30.0/32.0/25.0/28.0	1440/1450/1740/1750
		KN	220/380	60/60	8.3/4.8	65.0/38.0	1770/1770
		CN	220/230/380	50/50/50	7.9/7.7/4.5	52.0/54.3/30.0	1460/1470/1440
		EN	415/440/480	50/50/60	4.3/4.3/3.8	33.1/35.5/29.8	1460/1470/1770
		UN	230/460/400	60/60/50	7.9/4.0/4.5	65.2/34.8/36.3	1770/1770/1470
		MA	575	60	3.3	24.4	1760

The rated current in the motor characteristics table and performance table is the current data for the motor operating without a gearbox.
With regard to gearmotors with a brake, it is necessary to consider the current value flowing through the brake as needed.
For more details, please contact your nearest Sales Office or the CS Center.

2-2. Performance Table

H Type IP65 Gearmotors/IP65 Gearmotors with Brake

[Notes]

- The values in parentheses ( ) in the drawings are the indications for gearmotors with brake.
- The output shaft speed is the value relative to the synchronous speed of the motor and the reduction ratio.
- Three output shaft types, L, R, and T, are available for the H Type.
- Allowable output shaft O.H.L. is the at the middle of the output shaft.
- The "*" mark indicates a limited torque type. Please make sure to check the allowable output shaft torque in the performance table.
- The reduction ratio in ▭ in the performance table indicates that the output shaft rotates in the directions shown below when the connection is made as shown on page 546 (CW). (Refer to the figure on the right)
  3-phase: L shaft in the CW direction and R and T shafts in the CCW direction when viewed from the output shaft side
  1-phase: L shaft in the CCW direction and R and T shafts in the CW direction when viewed from the output shaft side

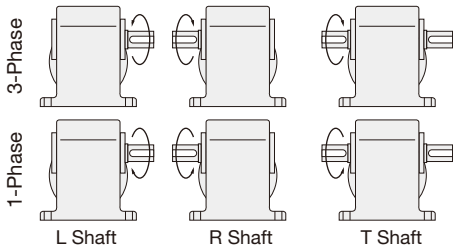

Series	Motor Power	Frame Size	Reduction Ratio	Actual Reduction Ratio	Output Shaft Speed r/min 50 Hz	Output Shaft Speed r/min 60 Hz	Allowable Output Shaft Torque N·m	Allowable Output Shaft O.H.L. N	Drawings Foot Mount	Drawings Flange Mount
MINI	15 W	15	1/10	1/10	150	180	0.69	343	P.283	P.290
			1/15	1/15	100	120	0.98	441		
			1/20	1/20	75	90	1.27	539		
			1/25	1/25	60	72	1.67	588		
			1/30	1/30	50	60	1.96	686		
			1/40	1/40	37.5	45	2.65	784		
			1/50	1/50	30	36	3.33	882		
			1/60	1/60	25	30	3.92	882		
			1/80	1/80	18.8	22.5	5.00	980		
			1/100	1/100	15	18	6.27	980		
			1/120	1/120	12.5	15	7.45	1080		
			1/160	1/160	9.4	11.2	9.80	1080		
			1/200	1/200	7.5	9	12.7	1080		
			1/240	1/240	6.3	7.5	14.7	1080		
	25 W	15	1/10	4/41	150	180	1.08	343	P.283	P.290
			1/15	8/123	100	120	1.67	441		
			1/20	2/41	75	90	2.25	539		
			1/25	8/205	60	72	2.74	588		
			1/30	4/123	50	60	3.33	686		
			1/40	1/41	37.5	45	4.41	784		
			1/50	4/205	30	36	5.49	882		
			1/60	20/1189	25	30	6.66	882		
			1/80	1/82	18.8	22.5	8.43	980		
			1/100	2/205	15	18	10.8	980		
			1/120	1/123	12.5	15	12.7	1080		
			1/160	1/164	9.4	11.2	16.7	1080		
			1/200	1/205	7.5	9	20.6	1080		
			1/240	5/1189	6.3	7.5	25.5	1080		
	40 W	15	1/10	4/41	150	180	1.76	343	P.283	P.290
			1/15	8/123	100	120	2.65	441		
			1/20	2/41	75	90	3.53	539		
			1/25	8/205	60	72	4.41	588		
			1/30	4/123	50	60	5.29	686		
			1/40	1/41	37.5	45	7.06	784		
			1/50	4/205	30	36	8.82	882		
			1/60	20/1189	25	30	10.8	882		
			1/80	1/82	18.8	22.5	13.7	980		
			1/100	2/205	15	18	16.7	980		
			1/120	1/123	12.5	15	20.6	1080		
		18	1/160	1/164	9.4	11.2	26.5	1370	P.284	P.291
			1/200	1/205	7.5	9	33.3	1370		
			1/240	1/246	6.3	7.5	40.2	1370		

2-2. Performance Table

Series	Motor Power	Frame Size	Reduction Ratio	Actual Reduction Ratio	Output Shaft Speed r/min 50 Hz	Output Shaft Speed r/min 60 Hz	Allowable Output Shaft Torque N·m	Allowable Output Shaft O.H.L. N	Drawings Foot Mount	Drawings Flange Mount
MINI	60 W	18	1/10	4/41	150	180	2.74	343	P.284	P.291
			1/15	8/123	100	120	4.12	441		
			1/20	2/41	75	90	5.49	539		
			1/25	8/205	60	72	6.96	588		
			1/30	4/123	50	60	8.33	686		
			1/40	1/41	37.5	45	10.8	784		
			1/50	4/205	30	36	13.7	882		
			1/60	2/123	25	30	16.7	882		
			1/80	1/82	18.8	22.5	20.6	1270		
			1/100	2/205	15	18	26.5	1270		
			1/120	1/123	12.5	15	31.4	1370		
			1/160	1/164	9.4	11.2	42.1	1370		
			1/200	1/205	7.5	9	52.9	1370		
			* /240	1/246	6.3	7.5	53.9	1370		
	90 W	18	1/10	4/41	150	180	4.12	441	P.284	P.291
			1/15	8/123	100	120	6.17	588		
			1/20	2/41	75	90	8.33	735		
			1/25	8/205	60	72	10.8	882		
			1/30	4/123	50	60	12.7	980		
			1/40	1/41	37.5	45	16.7	1080		
			1/50	4/205	30	36	20.6	1180		
			1/60	2/123	25	30	24.5	1180		
			1/80	1/82	18.8	22.5	31.4	1270		
			1/100	2/205	15	18	39.2	1270		
			1/120	1/123	12.5	15	47.0	1370		
			* /160	1/164	9.4	11.2	53.9	1370		
			* /200	1/205	7.5	9	53.9	1370		
			* /240	1/246	6.3	7.5	53.9	1370		

H2 Type IP65 Gearmotors/IP65 Gearmotors with Brake

[Notes]

- The values in parentheses ( ) in the drawings are the indications for gearmotors with brake.
- The values in brackets [ ] in the drawings are the indications for carbon steel output shafts.
- The output shaft speed is the value relative to the synchronous speed of the motor and the reduction ratio.
- ▭ in the performance table indicates that the H and L shafts rotate clockwise and the M, B, R, and T shafts rotate counterclockwise when viewed from the output shaft side when the connection is made as shown on page 547 (CW). (Refer to the figure on the right)
- Allowable output shaft O.H.L. is the value at the middle of the output shaft.
- The "*" mark indicates a limited torque type. Please make sure to check the allowable output shaft torque in the performance table.

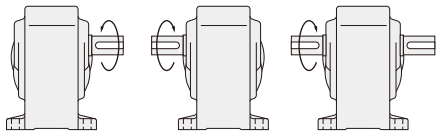

H Shaft
L Shaft

M Shaft
R Shaft

B Shaft
T Shaft

Series	Motor Power	Frame Size	Reduction Ratio	Actual Reduction Ratio	Output Shaft Speed r/min 50 Hz	Output Shaft Speed r/min 60 Hz	Allowable Output Shaft Torque N·m 50 Hz	Allowable Output Shaft Torque N·m 60 Hz	Allowable Output Shaft O.H.L. N	Drawings Foot Mount	Drawings Flange Mount
MID	3-Phase 0.1 kW	22	1/5	1/5	300	360	2.8	2.4	588	P.285	P.292
			1/10	1/10	150	180	5.7	4.8	931		
			1/15	1/15	100	120	8.6	7.2	1030		
			1/20	1/20	75	90	12	9.5	1180		
			1/25	1/25	60	72	15	12	1270		
			1/30	1/30	50	60	18	15	1370		
			1/40	1/40	37.5	45	23	19	1570		
			1/50	1/50	30	36	28	24	1720		
			1/60	1/59	25	30	34	28	1760		
			1/80	1/80	18.8	22.5	44	37	1760		
			1/100	1/100	15	18	55	46	1760		
			1/120	1/120	12.5	15	67	55	1760		
			1/160	1/160	9.4	11.2	88	74	1760		
			1/200	1/200	7.5	9	111	92	1760		
			* 1/240	1/236	6.3	7.5	118	111	1760		
		28	1/300	7/2120	5	6	145	121	2840	P.286	-
			1/375	7/2650	4	4.8	181	151	2840		
			1/450	7/3127	3.3	4	218	181	2840		
		32	1/600	7/4240	2.5	3	286	238	4120	P.287	-
			1/750	7/5300	2	2.4	358	298	4120		
			1/900	7/6360	1.7	2	429	358	4120		
			* 1/1200	7/8480	1.3	1.5	431	431	4120		
			* 1/1500	7/10600	1	1.2	431	431	4120		
	3-Phase 0.2 kW	22	1/5	1/5	300	360	5.7	4.8	588	P.285	P.292
			1/10	1/10	150	180	12	9.5	931		
			1/15	1/15	100	120	18	15	1030		
			1/20	1/20	75	90	23	19	1180		
			1/25	1/25	60	72	28	24	1270		
			1/30	1/30	50	60	34	28	1370		
			1/40	1/40	37.5	45	46	38	1570		
			1/50	1/50	30	36	57	48	1720		
			1/60	1/59	25	30	69	57	1810		
		28	1/80	1/80	18.8	22.5	88	74	2450	P.286	-
			1/100	1/100	15	18	111	92	2650		
			1/120	1/120	12.5	15	133	111	2740		
			1/160	1/160	9.4	11.2	177	148	2840		
			1/200	1/200	7.5	9	221	184	2840		
			1/240	1/236	6.3	7.5	245	221	2840		
		32	1/300	7/2120	5	6	294	245	3820	P.287	-
			1/375	7/2650	4	4.8	368	306	4120		
			1/450	7/3127	3.3	4	431	368	4120		
		40	1/600	7/4240	2.5	3	588	490	6760	P.288	-
			1/750	7/5300	2	2.4	735	613	6760		
			* 1/900	7/6360	1.7	2	764	735	6760		
			* 1/1200	7/8480	1.3	1.5	764	764	6760		
			* 1/1500	7/10600	1	1.2	764	764	6760		

2-2. Performance Table

Series	Motor Power	Frame Size	Reduction Ratio	Actual Reduction Ratio	Output Shaft Speed r/min 50 Hz	Output Shaft Speed r/min 60 Hz	Allowable Output Shaft Torque N·m 50 Hz	Allowable Output Shaft Torque N·m 60 Hz	Allowable Output Shaft O.H.L. N	Drawings Foot Mount
MID	3-Phase 0.4 kW	28	1/5	1/5	300	360	12	9.5	931	P.286
			1/10	1/10	150	180	23	19	1470	
			1/15	1/15	100	120	34	28	1670	
			1/20	1/20	75	90	46	38	1860	
			1/25	1/25	60	72	57	48	2010	
			1/30	1/30	50	60	69	57	2210	
			1/40	1/40	37.5	45	92	76	2450	
			1/50	1/50	30	36	115	95	2650	
			1/60	1/59	25	30	137	115	2740	
		32	1/80	1/80	18.8	22.5	177	148	3430	P.287
			1/100	1/100	15	18	221	184	3820	
			1/120	1/120	12.5	15	266	221	4120	
			1/160	1/160	9.4	11.2	355	295	4120	
			1/200	1/200	7.5	9	431	369	4120	
			* 1/240	1/236	6.3	7.5	431	431	4120	
		40	1/300	7/2080	5	6	572	477	6760	P.288
			1/375	7/2600	4	4.8	715	597	6760	
			* 1/450	7/3120	3.3	4	764	715	6760	
		50	1/600	21/12220	2.5	3	1150	955	9510	P.289
			* 1/750	1/728	2	2.4	1230	1190	9510	
			* 1/900	7/6240	1.7	2	1230	1230	9510	
			* 1/1200	21/24440	1.3	1.5	1230	1230	9510	
			* 1/1500	1/1456	1	1.2	1230	1230	9510	
	3-Phase 0.75 kW	32	1/5	1/5	300	360	22	18	1520	P.287
			1/10	1/10	150	180	43	36	2010	
			1/15	1/15	100	120	65	54	2210	
			1/20	1/20	75	90	86	72	2450	
			1/25	1/25	60	72	108	89	2740	
			1/30	1/30	50	60	128	107	2940	
			1/40	1/40	37.5	45	172	143	3430	
			1/50	1/50	30	36	215	179	3820	
			1/60	1/59	25	30	258	215	4120	
		40	1/80	1/80	18.8	22.5	332	277	5780	P.288
			1/100	1/100	15	18	416	346	6080	
			1/120	1/120	12.5	15	498	415	6270	
			1/160	1/160	9.4	11.2	664	554	6470	
			* 1/200	1/200	7.5	9	764	692	6660	
			* 1/240	1/240	6.3	7.5	764	764	6660	
		50	1/300	7/2120	5	6	1070	895	7740	P.289
			* 1/375	7/2650	4	4.8	1230	1120	8040	
			* 1/450	7/3180	3.3	4	1230	1230	8530	

Series	Motor Power	Frame Size	Reduction Ratio	Actual Reduction Ratio	Output Shaft Speed r/min 50 Hz	Output Shaft Speed r/min 60 Hz	Allowable Output Shaft Torque N·m 50 Hz	Allowable Output Shaft Torque N·m 60 Hz	Allowable Output Shaft O.H.L. N	Drawings Foot Mount
MID	3-Phase 1.5 kW	40	1/5	1/5	300	360	43	36	2650	P.288
			1/10	1/10	150	180	86	72	3530	
			1/15	1/15	100	120	128	107	4410	
			1/20	1/20	75	90	172	143	4700	
			1/25	1/25	60	72	215	179	5100	
			1/30	1/30	50	60	258	215	5290	
			1/40	1/40	37.5	45	344	277	5590	
			1/50	1/50	30	36	429	346	5880	
			1/60	1/60	25	30	515	415	6080	
		50	1/80	3/235	18.8	22.5	664	554	8530	P.289
			1/100	1/98	15	18	830	692	8820	
			1/120	1/120	12.5	15	1000	830	9020	
			* 1/160	3/470	9.4	11.2	1230	1110	9310	
			* 1/200	1/196	7.5	9	1230	1230	9510	
			* 1/240	1/240	6.3	7.5	1230	1230	9510	
	3-Phase 2.2 kW	50	1/5	1/5	300	360	63	53	3920	P.289
			1/10	1/10	150	180	126	105	4410	
			1/15	1/15	100	120	189	157	4900	
			1/20	12/235	75	90	252	210	5490	
			1/25	2/49	60	72	315	263	6080	
			1/30	1/30	50	60	378	315	6570	
			1/40	1/40	37.5	45	487	406	7060	
			1/50	1/50	30	36	609	507	7550	
			1/60	1/60	25	30	731	609	8130	
			1/80	3/235	18.8	22.5	974	812	8430	
			1/100	1/98	15	18	1220	1010	8820	
			* 1/120	1/120	12.5	15	1230	1220	8820	

Note 1: Please be sure to read the notes on page 280.

2-3. Drawings

H Type Right Angle Shaft | Shaft Diameter 15 | **Foot** Mounting

The values in parentheses ( ) are the indications for gearmotors with brake.

<Figure 1>

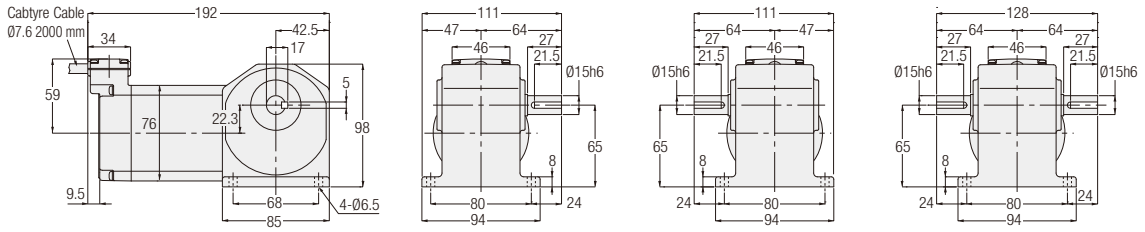

<Figure 2>

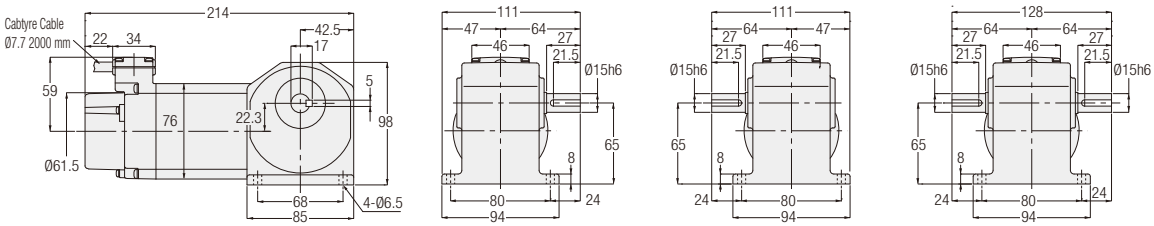

L Shaft R Shaft T Shaft

Number of Phases	Power	Part Number	Reduction Ratio	Figure Number	Brake	Approx. Weight (kg)
3-Phase	15 W	HLW-15#-∗∗∗-T15	10, 15, 20, 25, 30, 40, 50, 60, 80, 100, 120, 160, 200, 240	1	No	3
		HLV-15#-∗∗∗-T15		2	Yes	
	25 W	HLW-15#-∗∗∗-T25	10, 15, 20, 25, 30, 40, 50, 60, 80, 100, 120, 160, 200, 240	1	No	3
		HLV-15#-∗∗∗-T25		2	Yes	
	40 W	HLW-15#-∗∗∗-T40	10, 15, 20, 25, 30, 40, 50, 60, 80, 100, 120	1	No	3
		HLV-15#-∗∗∗-T40		2	Yes	
1-Phase	15 W	HLW-15#-∗∗∗-S15	10, 15, 20, 25, 30, 40, 50, 60, 80, 100, 120, 160, 200, 240	1	No	3
		HLV-15#-∗∗∗-S15		2	Yes	
	25 W	HLW-15#-∗∗∗-S25	10, 15, 20, 25, 30, 40, 50, 60, 80, 100, 120, 160, 200, 240	1	No	3
		HLV-15#-∗∗∗-S25		2	Yes	

Note: A shaft arrangement (L, R, T) will be indicated as # in the nomenclature. In addition, a reduction ratio will be indicated as ∗∗∗.
Note: Please refer to page 278 for the performance table.

H Type Right Angle Shaft | Shaft Diameter **18** | **Foot** Mounting

The values in parentheses ( ) are the indications for gearmotors with brake.

<Figure 1>

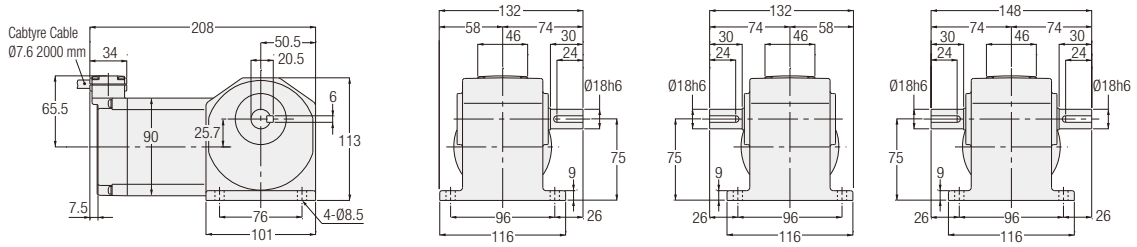

<Figure 2>

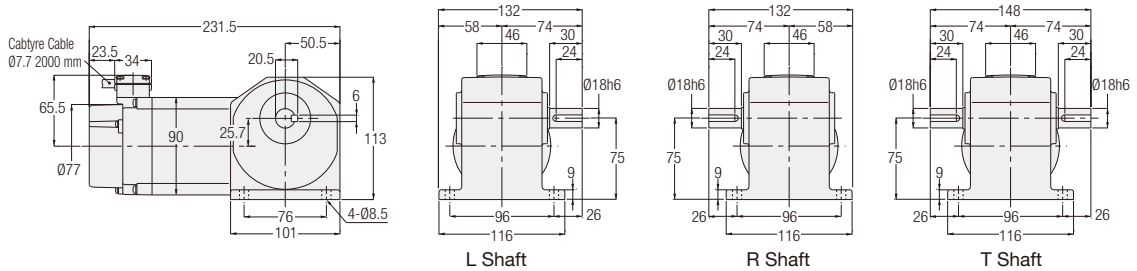

L Shaft R Shaft T Shaft

Number of Phases	Power	Part Number	Reduction Ratio	Figure Number	Brake	Approx. Weight (kg)
3-Phase	40 W	HLW-18#-***-T40	160, 200, 240	1	No	4
		HLV-18#-***-T40		2	Yes	
	60 W	HLW-18#-***-T60	10, 15, 20, 25, 30, 40, 50, 60, 80, 100, 120, 160, 200, 240	1	No	4
		HLV-18#-***-T60		2	Yes	
	90 W	HLW-18#-***-T90	10, 15, 20, 25, 30, 40, 50, 60, 80, 100, 120, 160, 200, 240	1	No	4
		HLV-18#-***-T90		2	Yes	
1-Phase	40 W	HLW-18#-***-S40	10, 15, 20, 25, 30, 40, 50, 60, 80, 100, 120, 160, 200, 240	1	No	4
		HLV-18#-***-S40		2	Yes	

Note: A shaft arrangement (L, R, T) will be indicated as # in the nomenclature. In addition, a reduction ratio will be indicated as ***.
Note: Please refer to page 278 for the performance table.

H2 Type Right Angle Shaft | Shaft Diameter 22 | **Foot** Mounting

The values in parentheses ( ) are the indications for gearmotors with brake.
The values in brackets [ ] are the indications for carbon steel output shafts.

<Figure 1>

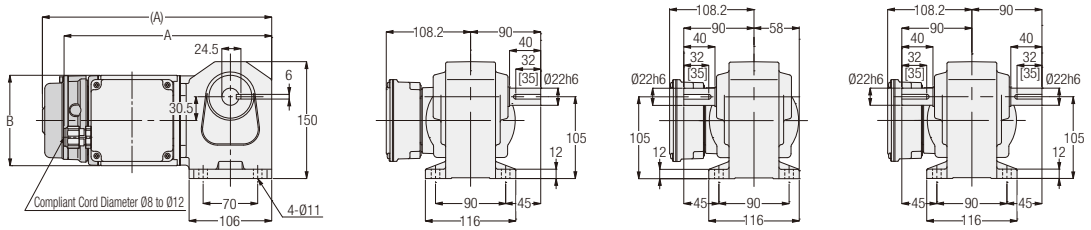

<Figure 2>

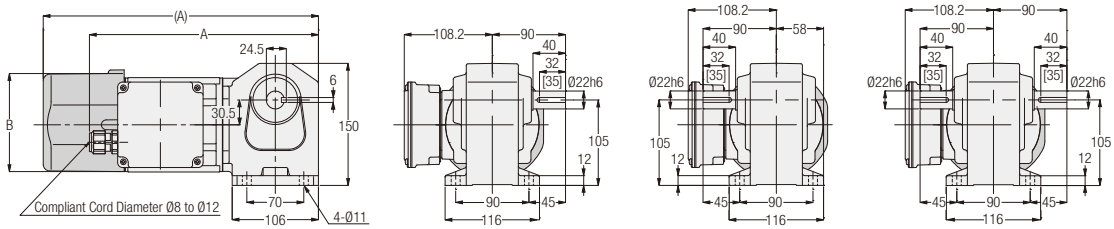

H Shaft
L Shaft

M Shaft
R Shaft

B Shaft
T Shaft

Number of Phases	Power	Part Number	Reduction Ratio	Figure Number	Brake	Approx. Weight (kg)	A	B
3-Phase	0.1 kW	H2L22#✱✱✱-WM01T◇◇EN	5, 10, 15, 20, 25, 30, 40, 50, 60, 80, 100, 120, 160, 200, 240	1	No	6.5	267	Ø115
		H2L22#✱✱✱-WM01T◇◇EV◆			Yes	8	294.5	Ø115
	0.2 kW	H2L22#✱✱✱-WM02T◇◇EN	5, 10, 15, 20, 25, 30, 40, 50, 60	2	No	7.5	282	Ø115
		H2L22#✱✱✱-WM02T◇◇EV◆			Yes	9	338.5	□126

Note: H, M, or B will be indicated as # in the nomenclature when the shaft material is stainless steel, L, R, or T will be indicated as # when it is carbon steel.
In addition, a reduction ratio will be indicated as ✱✱✱, a supply voltage code will be indicated as ◇◇, and a brake specification will be indicated as ◆.
Note: Please refer to page 280 for the performance table.

H2 Type Right Angle Shaft | Shaft Diameter **28** | **Foot** Mounting

The values in parentheses ( ) are the indications for gearmotors with brake.
The values in brackets [ ] are the indications for carbon steel output shafts.

<Figure 1>

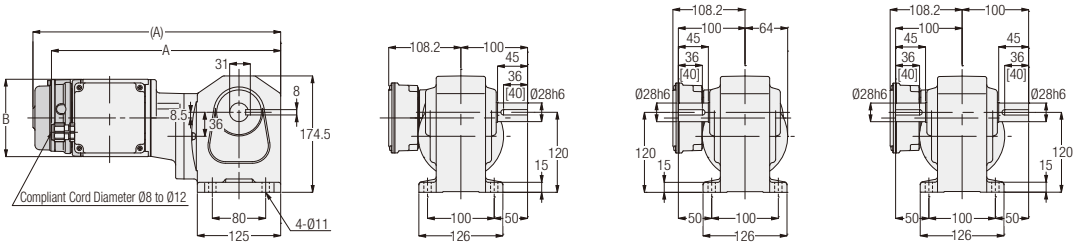

<Figure 2>

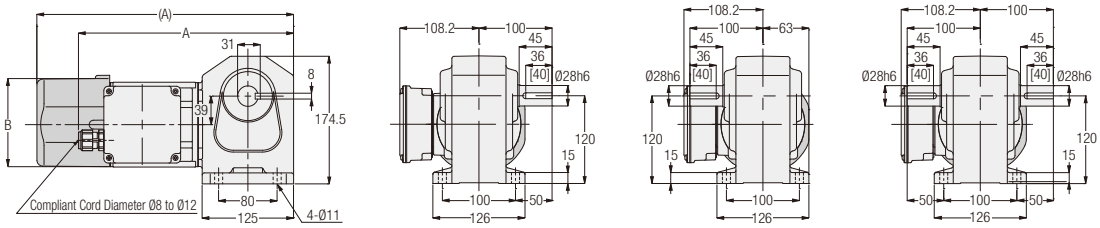

<Figure 3>

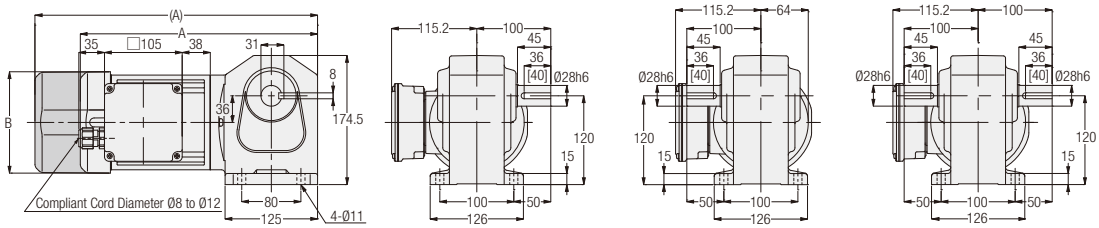

H Shaft
L Shaft

M Shaft
R Shaft

B Shaft
T Shaft

Number of Phases	Power	Part Number	Reduction Ratio	Figure Number	Brake	Approx. Weight (kg)	A	B
3-Phase	0.1 kW	H2L28#✱✱✱-WM01T◇◇EN	300, 375, 450	1	No	10	344	Ø115
		H2L28#✱✱✱-WM01T◇◇EV◆			Yes	11.5	371.5	Ø115
	0.2 kW	H2L28#✱✱✱-WM02T◇◇EN	80, 100, 120, 160, 200, 240	2	No	9.5	294.5	Ø115
		H2L28#✱✱✱-WM02T◇◇EV◆			Yes	11	351	□126
	0.4 kW	H2L28#✱✱✱-WM04T◇◇EN	5, 10, 15, 20, 25, 30, 40, 50, 60	3	No	11	321	□137
		H2L28#✱✱✱-WM04T◇◇EV◆			Yes	12.5	382	□137

Note: H, M, or B will be indicated as # in the nomenclature when the shaft material is stainless steel, L, R, or T will be indicated as # when it is carbon steel.
In addition, a reduction ratio will be indicated as ✱✱✱, a supply voltage code will be indicated as ◇◇, and a brake specification will be indicated as ◆.
Note: Please refer to page 280 for the performance table.

H2 Type Right Angle Shaft | Shaft Diameter **32** | **Foot** Mounting

The values in parentheses ( ) are the indications for gearmotors with brake.
The values in brackets [ ] are the indications for carbon steel output shafts.

<Figure 1>

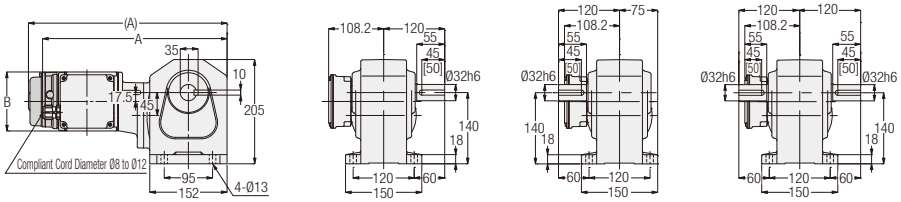

<Figure 2>

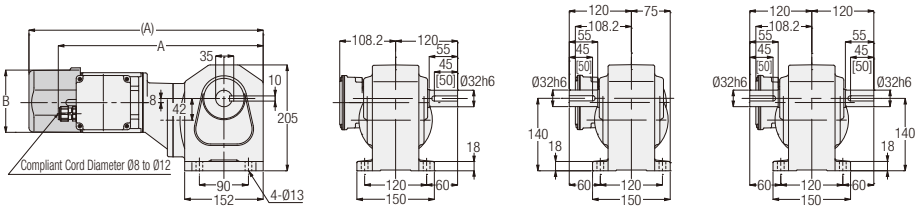

<Figure 3>

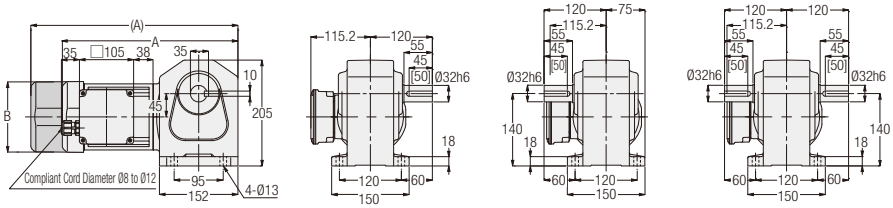

<Figure 4>

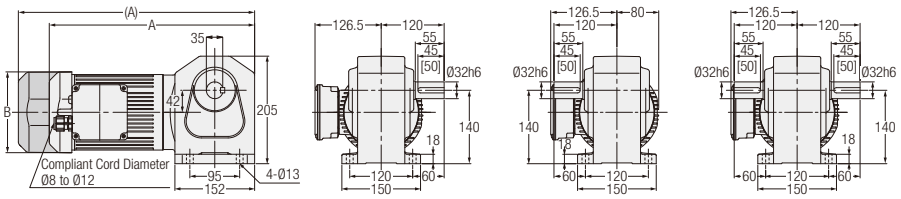

H Shaft
L Shaft

M Shaft
R Shaft

B Shaft
T Shaft

Number of Phases	Power	Part Number	Reduction Ratio	Figure Number	Brake	Approx. Weight (kg)	A	B
3-Phase	0.1 kW	H2L32#***-WM01T◇◇EN	600, 750, 900,1200, 1500	1	No	13	363	Ø115
		H2L32#***-WM01T◇◇EV◆			Yes	14.5	390.5	Ø115
	0.2 kW	H2L32#***-WM02T◇◇EN	300, 375, 450	2	No	13.5	397	Ø115
		H2L32#***-WM02T◇◇EV◆			Yes	15	453.5	□126
	0.4 kW	H2L32#***-WM04T◇◇EN	80, 100, 120, 160, 200, 240	3	No	14	340	□137
		H2L32#***-WM04T◇◇EV◆			Yes	15.5	401	□137
	0.75 kW	H2L32#***-WR08T◇◇EN	5, 10, 15, 20, 25, 30, 40, 50, 60	4	No	21	391.5	□154
		H2L32#***-WR08T◇◇EV◆			Yes	23.5	450.5	□154

Note: H, M, or B will be indicated as # in the nomenclature when the shaft material is stainless steel, L, R, or T will be indicated as # when it is carbon steel.
In addition, a reduction ratio will be indicated as ***, a supply voltage code will be indicated as ◇◇, and a brake specification will be indicated as ◆.
Note: Please refer to page 280 for the performance table.

H2 Type Right Angle Shaft | Shaft Diameter **40** | **Foot** Mounting

The values in parentheses ( ) are the indications for gearmotors with brake.
The values in brackets [ ] are the indications for carbon steel output shafts.

<Figure 1>

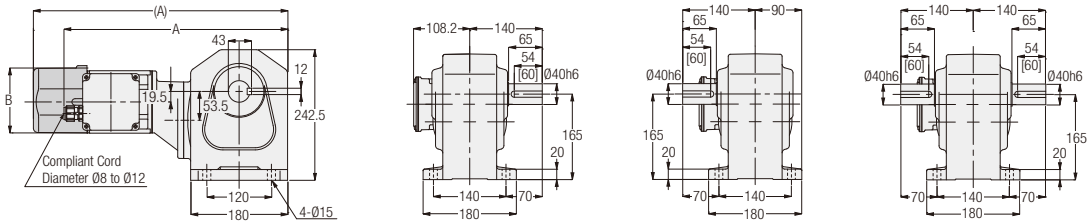

<Figure 2>

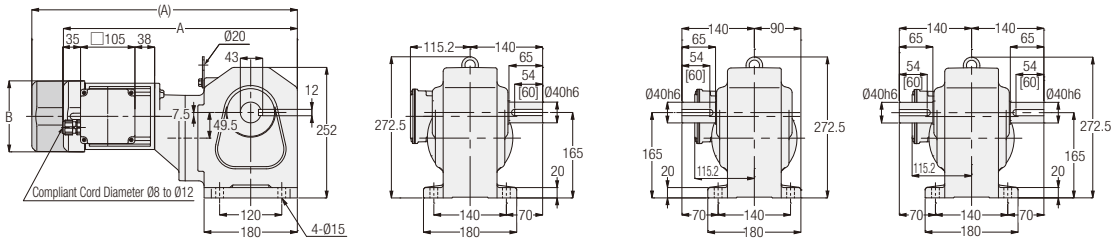

<Figure 3>

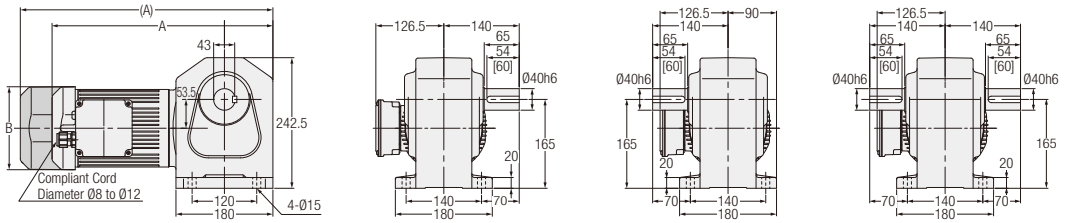

Note: Gearmotors with a motor power of 0.75 kW does not include the hanging plate.

<Figure 4>

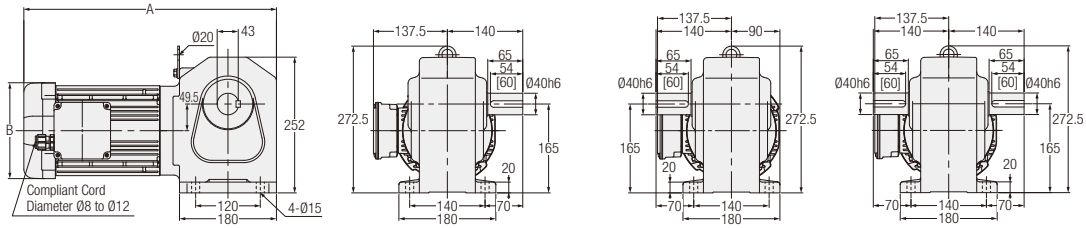

H Shaft
L Shaft

M Shaft
R Shaft

B Shaft
T Shaft

Number of Phases	Power	Part Number	Reduction Ratio	Figure Number	Brake	Approx. Weight (kg)	A	B
3-Phase	0.2 kW	H2L40#∗∗∗-WM02T◇◇EN	600, 750, 900, 1200, 1500	1	No	22	415.5	Ø115
		H2L40#∗∗∗-WM02T◇◇EV◆			Yes	23.5	472	□126
	0.4 kW	H2L40#∗∗∗-WM04T◇◇EN	300, 375, 450	2	No	24.5	451.5	□137
		H2L40#∗∗∗-WM04T◇◇EV◆			Yes	26	512.5	□137
	0.75 kW	H2L40#∗∗∗-WR08T◇◇EN	80, 100, 120, 160, 200, 240	3	No	29.5	410	□154
		H2L40#∗∗∗-WR08T◇◇EV◆			Yes	32	469	□154
	1.5 kW	H2L40#∗∗∗-WR15T◇◇EN	5, 10, 15, 20, 25, 30, 40, 50, 60	4	No	36.5	469	□178

Note: H, M, or B will be indicated as # in the nomenclature when the shaft material is stainless steel, L, R, or T will be indicated as # when it is carbon steel.
In addition, a reduction ratio will be indicated as ∗∗∗, a supply voltage code will be indicated as ◇◇, and a brake specification will be indicated as ◆.
Note: There are no gearmotors with motor power of 1.5 kW that have a brake.
Note: Please refer to page 280 for the performance table.

H2 Type Right Angle Shaft | Shaft Diameter 50 | **Foot** Mounting

The values in parentheses ( ) are the indications for gearmotors with brake.
The values in brackets [ ] are the indications for carbon steel output shafts.

<Figure 1>

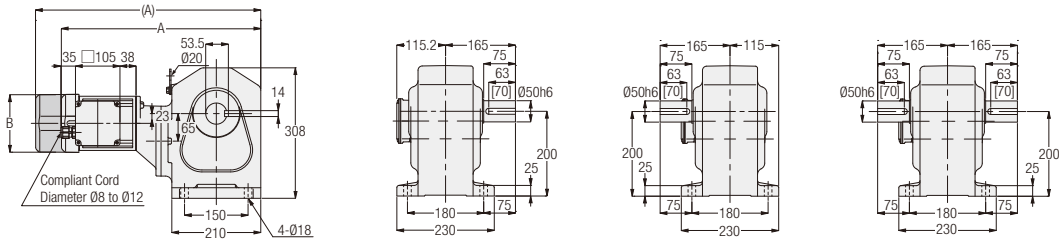

<Figure 2>

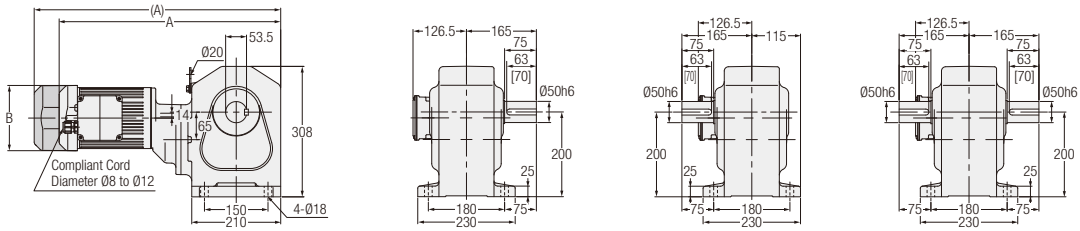

<Figure 3>

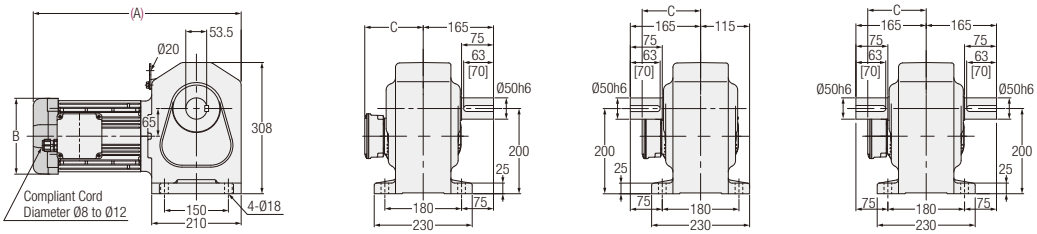

H Shaft
L Shaft

M Shaft
R Shaft

B Shaft
T Shaft

Number of Phases	Power	Part Number	Reduction Ratio	Figure Number	Brake	Approx. Weight (kg)	A	B	C
3-Phase	0.4 kW	H2L50#∗∗∗-WM04T◇◇EN	600, 750, 900, 1200, 1500	1	No	54.5	470.5	□137	-
		H2L50#∗∗∗-WM04T◇◇EV◆			Yes	56	531.5	□137	-
	0.75 kW	H2L50#∗∗∗-WR08T◇◇EN	300, 375, 450	2	No	62	523	□154	-
		H2L50#∗∗∗-WR08T◇◇EV◆			Yes	64.5	582	□154	-
	1.5 kW	H2L50#∗∗∗-WR15T◇◇EN	80, 100, 120, 160, 200, 240	3	No	65.5	488	□178	137.5
	2.2 kW	H2L50#∗∗∗-WR22T◇◇EN	5, 10, 15, 20, 25, 30, 40, 50, 60, 80, 100, 120	3	No	72.5	537.5	□192	147.5

Note: H, M, or B will be indicated as # in the nomenclature when the shaft material is stainless steel, L, R, or T will be indicated as # when it is carbon steel.
In addition, a reduction ratio will be indicated as ∗∗∗, a supply voltage code will be indicated as ◇◇, and a brake specification will be indicated as ◆.
Note: There are no gearmotors with motor power of 1.5 kW and 2.2 kW that have a brake.
Note: Please refer to page 281 for the performance table.

H Type Right Angle Shaft | Shaft Diameter **15** | **Flange** Mounting

The values in parentheses ( ) are the indications for gearmotors with brake.

<Figure 1>

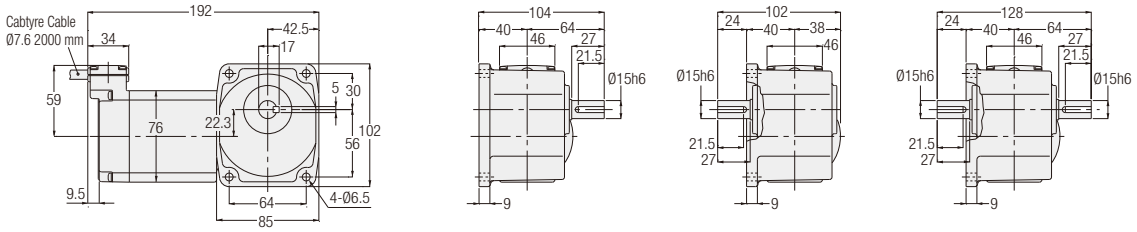

<Figure 2>

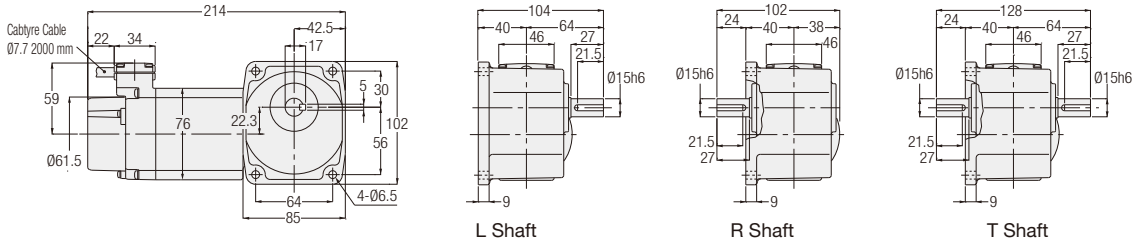

L Shaft R Shaft T Shaft

Number of Phases	Power	Part Number	Reduction Ratio	Figure Number	Brake	Approx. Weight (kg)
3-Phase	15 W	HFW-15#-∗∗∗-T15	10, 15, 20, 25, 30, 40, 50, 60, 80, 100, 120, 160, 200, 240	1	No	3
		HFV-15#-∗∗∗-T15		2	Yes	
	25 W	HFW-15#-∗∗∗-T25	10, 15, 20, 25, 30, 40, 50, 60, 80, 100, 120, 160, 200, 240	1	No	3
		HFV-15#-∗∗∗-T25		2	Yes	
	40 W	HFW-15#-∗∗∗-T40	10, 15, 20, 25, 30, 40, 50, 60, 80, 100, 120	1	No	3
		HFV-15#-∗∗∗-T40		2	Yes	
1-Phase	15 W	HFW-15#-∗∗∗-S15	10, 15, 20, 25, 30, 40, 50, 60, 80, 100, 120, 160, 200, 240	1	No	3
		HFV-15#-∗∗∗-S15		2	Yes	
	25 W	HFW-15#-∗∗∗-S25	10, 15, 20, 25, 30, 40, 50, 60, 80, 100, 120, 160, 200, 240	1	No	3
		HFV-15#-∗∗∗-S25		2	Yes	

Note: A shaft arrangement (L, R, T) will be indicated as # in the nomenclature. In addition, a reduction ratio will be indicated as ∗∗∗.
Note: Please refer to page 278 for the performance table.

H Type Right Angle Shaft | Shaft Diameter **18** | **Flange** Mounting

The values in parentheses ( ) are the indications for gearmotors with brake.

<Figure 1>

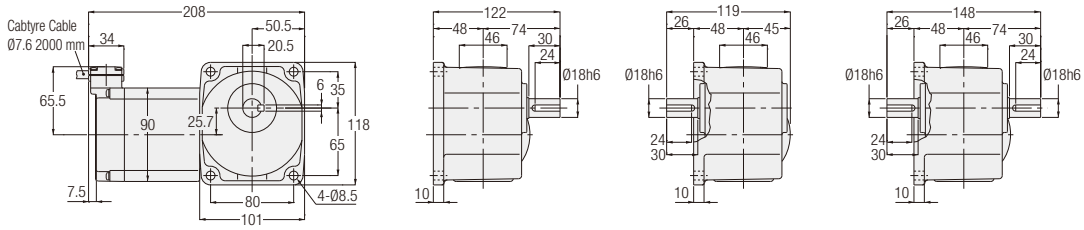

<Figure 2>

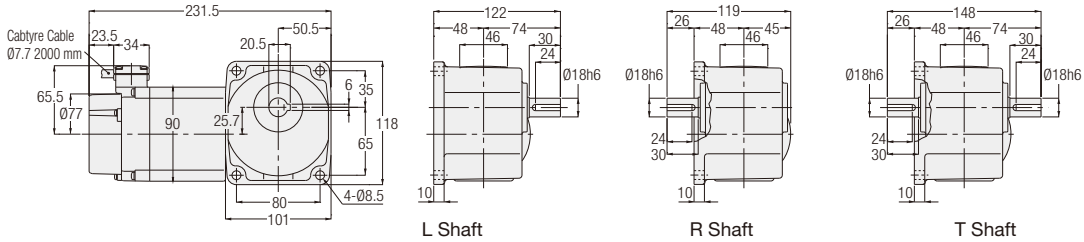

L Shaft R Shaft T Shaft

Number of Phases	Power	Part Number	Reduction Ratio	Figure Number	Brake	Approx. Weight (kg)
3-Phase	40 W	HFW-18#-∗∗∗-T40	160, 200, 240	1	No	4
		HFV-18#-∗∗∗-T40		2	Yes	
	60 W	HFW-18#-∗∗∗-T60	10, 15, 20, 25, 30, 40, 50, 60, 80, 100, 120, 160, 200, 240	1	No	4
		HFV-18#-∗∗∗-T60		2	Yes	
	90 W	HFW-18#-∗∗∗-T90	10, 15, 20, 25, 30, 40, 50, 60, 80, 100, 120, 160, 200, 240	1	No	4
		HFV-18#-∗∗∗-T90		2	Yes	
1-Phase	40 W	HFW-18#-∗∗∗-S40	10, 15, 20, 25, 30, 40, 50, 60, 80, 100, 120, 160, 200, 240	1	No	4
		HFV-18#-∗∗∗-S40		2	Yes	

Note: A shaft arrangement (L, R, T) will be indicated as # in the nomenclature. In addition, a reduction ratio will be indicated as ∗∗∗.
Note: Please refer to page 278 for the performance table.

H2 Type Right Angle Shaft | Shaft Diameter 22 | **Flange** Mounting

The values in parentheses ( ) are the indications for gearmotors with brake.
The values in brackets [ ] are the indications for carbon steel output shafts.

<Figure 1>

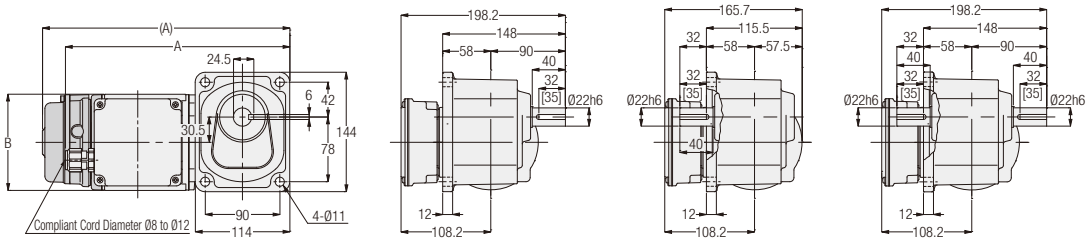

<Figure 2>

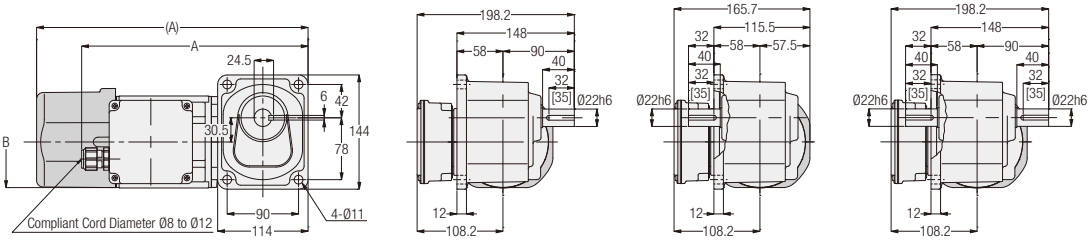

H Shaft
L Shaft

M Shaft
R Shaft

B Shaft
T Shaft

Number of Phases	Power	Part Number	Reduction Ratio	Figure Number	Brake	Approx. Weight (kg)	A	B
3-Phase	0.1 kW	H2F22#✱✱✱-WM01T◇◇EN	5, 10, 15, 20, 25, 30, 40, 50, 60, 80, 100, 120, 160, 200, 240	1	No	6.5	271	Ø115
		H2F22#✱✱✱-WM01T◇◇EV◆			Yes	8	298.5	Ø115
	0.2 kW	H2F22#✱✱✱-WM02T◇◇EN	5, 10, 15, 20, 25, 30, 40, 50, 60	2	No	7.5	286	Ø115
		H2F22#✱✱✱-WM02T◇◇EV◆			Yes	9	342.5	□126

Note: H, M, or B will be indicated as # in the nomenclature when the shaft material is stainless steel, L, R, or T will be indicated as # when it is carbon steel.
In addition, a reduction ratio will be indicated as ✱✱✱, a supply voltage code will be indicated as ◇◇, and a brake specification will be indicated as ◆.
Note: Please refer to page 280 for the performance table.

MEMO

3. Gearmotors with Clutch/Brake

3-1. Motor Characteristics Table

H2 Type 3-Phase Standard Voltage

Series	Power	Voltage (V)	Frequency (Hz)	Rated Current (A)	Rated Speed (r/min)
MID	0.2 kW IE2	200/200/220	50/60/60	1.1/1.0/1.0	1400/1680/1700
	0.4 kW IE2	200/200/220	50/60/60	2.1/1.8/1.8	1400/1680/1700
	0.75 kW IE3	200/200/220	50/60/60	3.5/3.2/3.1	1450/1740/1750

The rated current in the motor characteristics table is the current data for the motor operating without a gearbox.
With regard to gearmotors with a brake, it is necessary to consider the current value flowing through the brake as needed.
For more details, please contact your nearest Sales Office or the CS Center.

H2 Type 3-Phase High Voltage (400 V Class)

Series	Power	Voltage (V)	Frequency (Hz)	Rated Current (A)	Rated Speed (r/min)
MID	0.2 kW IE2	380/400/400/440	50/50/60/60	0.56/0.56/0.5/0.5	1390/1400/1680/1710
	0.4 kW IE2	380/400/400/440	50/50/60/60	1.0/1.0/0.9/0.9	1390/1400/1680/1710
	0.75 kW IE3	380/400/400/440	50/50/60/60	1.73/1.72/1.58/1.54	1440/1450/1740/1750

The rated current in the motor characteristics table is the current data for the motor operating without a gearbox.
With regard to gearmotors with a brake, it is necessary to consider the current value flowing through the brake as needed.
For more details, please contact your nearest Sales Office or the CS Center.

3-2. Performance Table

[Notes]
- The output shaft speed is the value relative to the synchronous speed of the motor and the reduction ratio.
- In the performance table, ▭ indicates that the L shaft rotates clockwise and the R and T shafts rotate counterclockwise when viewed from the output shaft side when the connection is made as shown on page 553 (CW). (Refer to the figure on the right)
- Allowable output shaft O.H.L. is the value at the middle of the output shaft.
- The "*" mark indicates a limited torque type. Please make sure to check the allowable output shaft torque in the performance table.
- Please avoid using gearmotors with clutch/brake in vertical operation (lifting). There is a danger of falling during a power outage.

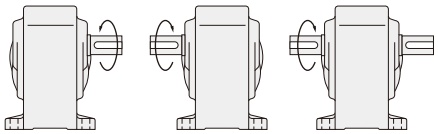

Motor Power	Frame Size	Reduction Ratio	Actual Reduction Ratio	Output Shaft Speed r/min 50 Hz	Output Shaft Speed r/min 60 Hz	Allowable Output Shaft Torque N·m 50 Hz	Allowable Output Shaft Torque N·m 60 Hz	Allowable Output Shaft O.H.L. N 50 Hz	Drawings Foot Mount	Drawings Flange Mount
3-Phase 0.2 kW	22	1/5	1/5	300	360	5.7	4.8	588	P.296	P.298
		1/10	1/10	150	180	12	9.5	931		
		1/15	1/15	100	120	18	15	1030		
		1/20	1/20	75	90	23	19	1180		
		1/25	1/25	60	72	28	24	1270		
		1/30	1/30	50	60	34	28	1370		
		1/40	1/40	37.5	45	46	38	1570		
		1/50	1/50	30	36	57	48	1720		
		1/60	1/59	25	30	69	57	1810		
	28	1/80	1/80	18.8	22.5	88	74	2450	P.296	-
		1/100	1/100	15	18	111	92	2650		
		1/120	1/120	12.5	15	133	111	2740		
		1/160	1/160	9.4	11.2	177	148	2840		
		1/200	1/200	7.5	9	221	184	2840		
		1/240	1/236	6.3	7.5	245	221	2840		
3-Phase 0.4 kW	28	1/5	1/5	300	360	12	9.5	931	P.296	-
		1/10	1/10	150	180	23	19	1470		
		1/15	1/15	100	120	34	28	1670		
		1/20	1/20	75	90	46	38	1860		
		1/25	1/25	60	72	57	48	2010		
		1/30	1/30	50	60	69	57	2210		
		1/40	1/40	37.5	45	92	76	2450		
		1/50	1/50	30	36	115	95	2650		
		1/60	1/59	25	30	137	115	2740		
	32	1/80	1/80	18.8	22.5	177	148	3430	P.297	-
		1/100	1/100	15	18	221	184	3820		
		1/120	1/120	12.5	15	266	221	4120		
		1/160	1/160	9.4	11.2	355	295	4120		
		1/200	1/200	7.5	9	431	369	4120		
		* 1/240	1/236	6.3	7.5	431	431	4120		
3-Phase 0.75 kW	32	1/5	1/5	300	360	22	18	1520	P.297	-
		1/10	1/10	150	180	43	36	2010		
		1/15	1/15	100	120	65	54	2210		
		1/20	1/20	75	90	86	72	2450		
		1/25	1/25	60	72	108	89	2740		
		1/30	1/30	50	60	128	107	2940		
		1/40	1/40	37.5	45	172	143	3430		
		1/50	1/50	30	36	215	179	3820		
		1/60	1/59	25	30	258	215	4120		
	40	1/80	1/80	18.8	22.5	332	277	5780	P.297	-
		1/100	1/100	15	18	416	346	6080		
		1/120	1/120	12.5	15	498	415	6270		
		1/160	1/160	9.4	11.2	664	554	6470		
		1/200	1/200	7.5	9	764	692	6660		
		* 1/240	1/240	6.3	7.5	764	764	6660		

3-3. Drawings

H2 Type Right Angle Shaft | Shaft Diameter 22 | **Foot** Mounting

<Figure 1>

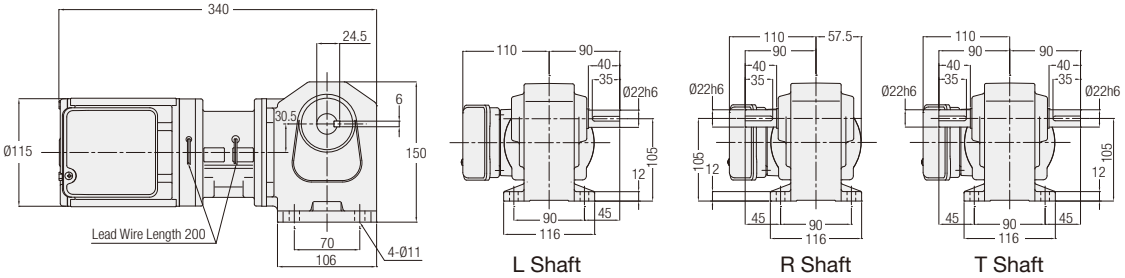

Number of Phases	Power	Part Number	Reduction Ratio	Figure Number	Approx. Weight (kg)
3-Phase	0.2 kW	H2L22#∗∗∗-EM02T◇JTN	5, 10, 15, 20, 25, 30, 40, 50, 60	1	9.5

Note: A shaft arrangement (L, R, T) will be indicated as # in the nomenclature. In addition, a reduction ratio will be indicated as ∗∗∗ and a supply voltage code will be indicated as ◇.
Note: Please refer to page 295 for the performance table.

H2 Type Right Angle Shaft | Shaft Diameter 28 | **Foot** Mounting

<Figure 2>

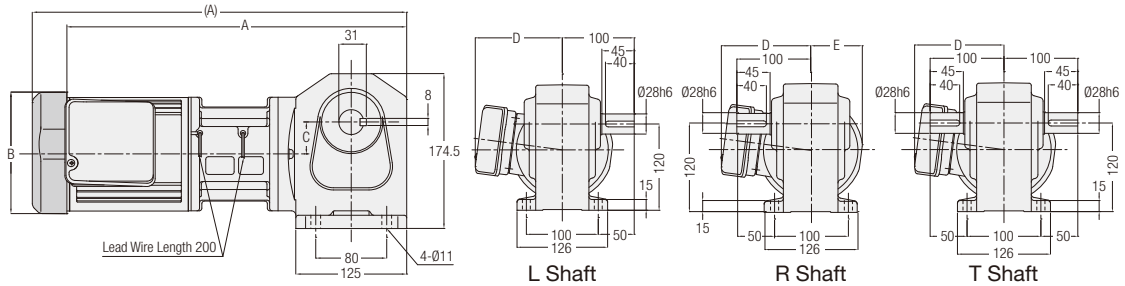

Note: The value in parentheses is the value of a gearmotor with a motor power of 0.4 kW.

Number of Phases	Power	Part Number	Reduction Ratio	Figure Number	Approx. Weight (kg)	A	B	C	D	E
3-Phase	0.2 kW	H2L28#∗∗∗-EM02T◇JTN	80, 100, 120, 160, 200, 240	2	11.5	352.5	Ø115	39	110	57.5
	0.4 kW	H2L28#∗∗∗-EM04T◇JTN	5, 10, 15, 20, 25, 30, 40, 50, 60	2	14	422	□137	36	121	70

Note: A shaft arrangement (L, R, T) will be indicated as # in the nomenclature. In addition, a reduction ratio will be indicated as ∗∗∗ and a supply voltage code will be indicated as ◇.
Note: Please refer to page 295 for the performance table.

H2 Type Right Angle Shaft | Shaft Diameter 32 | Foot Mounting

<Figure 1>

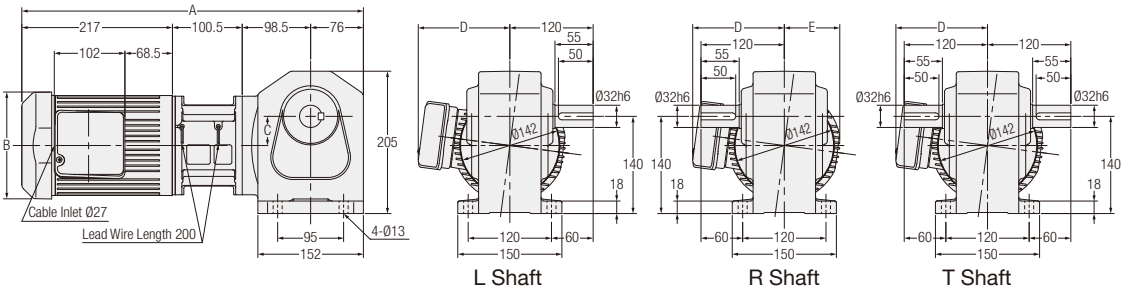

Number of Phases	Power	Part Number	Reduction Ratio	Figure Number	Approx. Weight (kg)	A	B	C	D	E
3-Phase	0.4 kW	H2L32#✱✱✱-EM04T◇JTN	80, 100, 120, 160, 200, 240	1	17	441	□137	45	121	75
	0.75 kW	H2L32#✱✱✱-ER08T◇JTN	5, 10, 15, 20, 25, 30, 40, 50, 60	1	24.5	492	□154	42	132	80

Note: A shaft arrangement (L, R, T) will be indicated as # in the nomenclature. In addition, a reduction ratio will be indicated as ✱✱✱ and a supply voltage code will be indicated as ◇.
Note: Please refer to page 295 for the performance table.

H2 Type Right Angle Shaft | Shaft Diameter 40 | Foot Mounting

<Figure 2>

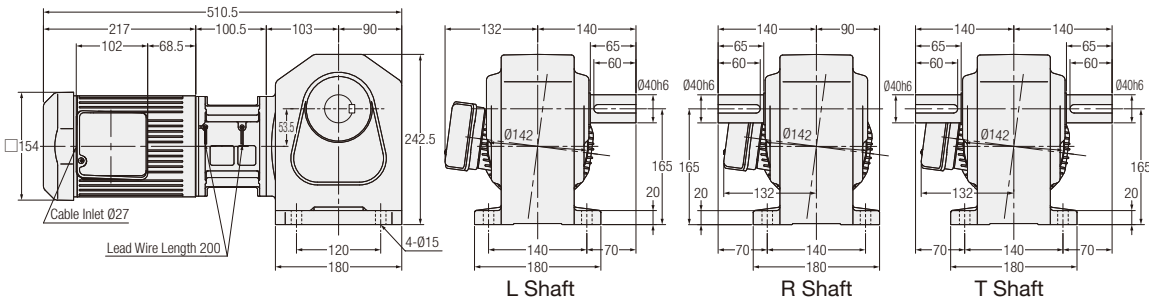

Number of Phases	Power	Part Number	Reduction Ratio	Figure Number	Approx. Weight (kg)
3-Phase	0.75 kW	H2L40#✱✱✱-ER08T◇JTN	80, 100, 120, 160, 200, 240	2	33

Note: A shaft arrangement (L, R, T) will be indicated as # in the nomenclature. In addition, a reduction ratio will be indicated as ✱✱✱ and a supply voltage code will be indicated as ◇.
Note: Please refer to page 295 for the performance table.

H2 Type Right Angle Shaft | Shaft Diameter 22 | Flange Mounting

<Figure 1>

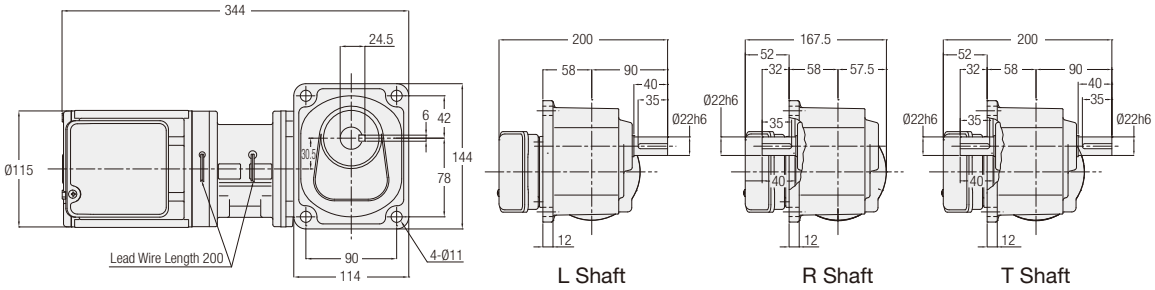

Number of Phases	Power	Part Number	Reduction Ratio	Figure Number	Approx. Weight (kg)
3-Phase	0.2 kW	H2F22#✱✱✱-EM02T◇JTN	5, 10, 15, 20, 25, 30, 40, 50, 60	1	9.5

Note: A shaft arrangement (L, R, T) will be indicated as # in the nomenclature. In addition, a reduction ratio will be indicated as ✱✱✱ and a supply voltage code will be indicated as ◇.

Note: Please refer to page 295 for the performance table.

MEMO

4. Speed Control Gearmotors

4-1. Properties and Motor Characteristics Table

Properties

This gearmotor has a motor provided with a rate generator (AC generator) for speed detection and can control the speed freely in a wide range of 50 to 1400 r/min (50 Hz) or 50 to 1700 r/min (60 Hz) by means of a dedicated speed controller.

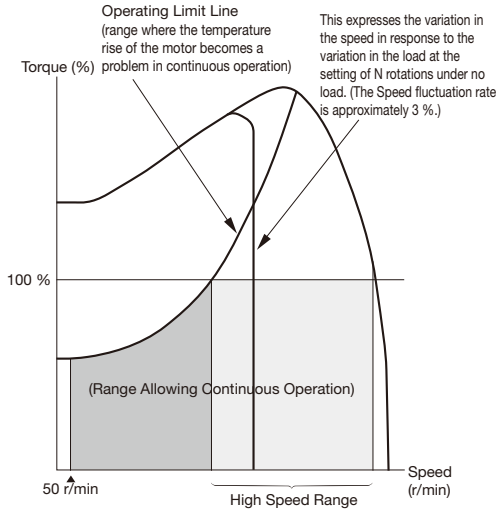

Note: The same speed can be obtained from a speed control gearmotor, regardless of the power supply frequency. For example, a speed set in the 50 Hz region remains unchanged also in the 60 Hz region, and the same speed can be obtained. (However, the maximum speed is within the range of 1400 r/min.)

■ Properties

❶ Wide variable speed range
Our original circuit design enables the induction gearmotor to operate continuously from a low speed range of 50 r/min.

Power Source Frequency	Variable speed range
50 Hz	50 to 1400 r/min
60 Hz	50 to 1700 r/min

❷ Outstanding output characteristic
The induction motor ensures a high allowable load torque value in the low speed range and has a wide high-speed range characteristic as shown in the right figure.

❸ Wide variety of types
Induction gearmotors are available in eight main types according to applications: two U types (100 V, 200 V) connectable by means of a lead wire with a connector and six plug-in P types (100 V, 200 V).
Note: Please refer to page 631 for detailed specifications.

Motor Characteristics Table

H Type 1-Phase (Speed Control Gearmotor)

Series	Power (W)	Voltage (V)	Frequency (Hz)	Frame Size	Max Current (A)	High Speed Range (r/min)	Capacitor (μF)
MINI	15 W	100/100	50/60	15	0.6/0.6	500 to 1350/550 to 1650	6
				22	0.6/0.6	500 to 1350/550 to 1650	6
		200/200	50/60	15	0.3/0.3	600 to 1400/750 to 1700	1.5
				22	0.3/0.3	600 to 1400/750 to 1700	1.5
	25 W	100/100	50/60	15	0.6/0.6	750 to 1350/1000 to 1650	8
				22	0.6/0.6	750 to 1350/1000 to 1650	8
				28	0.7/0.7	550 to 1400/650 to 1650	8
		200/200	50/60	15	0.4/0.4	850 to 1350/1000 to 1650	2
				22	0.4/0.4	850 to 1350/1000 to 1650	2
				28	0.4/0.4	600 to 1350/800 to 1650	2
	40 W	100/100	50/60	18	0.9/0.9	800 to 1350/1050 to 1650	12
				28	0.9/0.9	800 to 1350/1050 to 1650	12
				32	0.9/0.9	800 to 1350/1050 to 1650	12
		200/200	50/60	18	0.5/0.5	900 to 1350/1300 to 1650	3
				28	0.5/0.5	900 to 1350/1300 to 1650	3
				32	0.5/0.5	900 to 1350/1300 to 1650	3
	60 W	100/100	50/60	18	1.0/1.7	700 to 1350/800 to 1650	20
				28	1.0/1.7	700 to 1350/800 to 1650	20
				32	1.0/1.7	700 to 1350/800 to 1650	20
		200/200	50/60	18	0.8/0.9	700 to 1350/800 to 1650	5
				28	0.8/0.9	700 to 1350/800 to 1650	5
				32	0.8/0.9	700 to 1350/800 to 1650	5
	90 W	100/100	50/60	18	1.4/2.0	950 to 1300/1150 to 1600	26
				28	1.4/2.0	950 to 1300/1150 to 1600	26
				32	1.4/2.0	950 to 1300/1150 to 1600	26
				40	1.4/2.0	950 to 1350/1100 to 1650	26
		200/200	50/60	18	0.9/1.0	1000 to 1350/1150 to 1600	6.5
				28	0.9/1.0	1000 to 1350/1150 to 1600	6.5
				32	0.9/1.0	1000 to 1350/1150 to 1600	6.5
				40	1.0/1.1	900 to 1350/1100 to 1650	6.5

4-2. Graph for Speed Characteristics

Torque-Speed Characteristic Graph

<1-Phase15 W>

■ 100 V

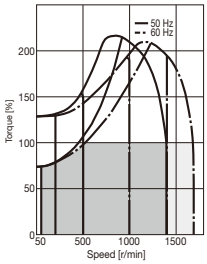

■ 200 V

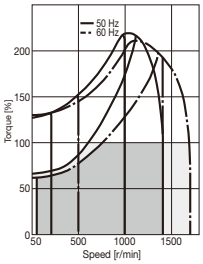

<1-Phase 25 W>

■ Frame Size 15, 22/100 V

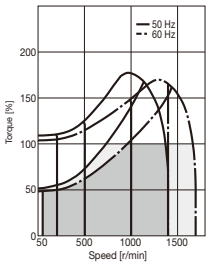

■ Frame Size 15, 22/200 V

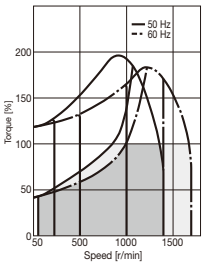

■ Frame Size 28/100 V

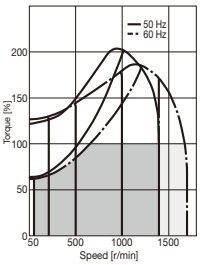

■ Frame Size 28/200 V

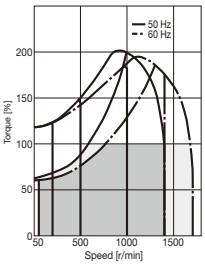

<1-Phase 40 W>

■ 100 V

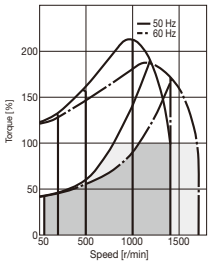

■ 200 V

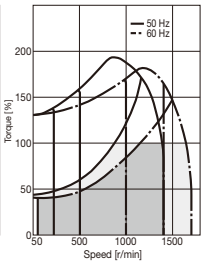

<1-Phase 60 W>

■ 100 V

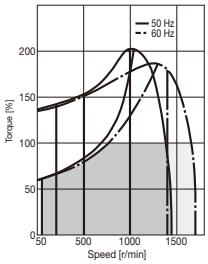

■ 200 V

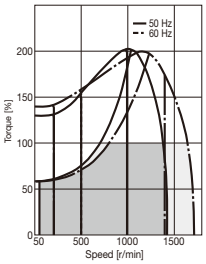

<1-Phase 90 W>

■ Frame Size 18, 28, 32/100 V

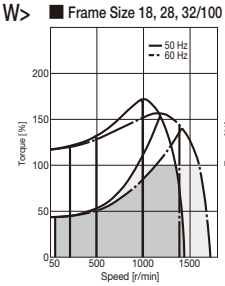

■ Frame Size 18, 28, 32/200 V

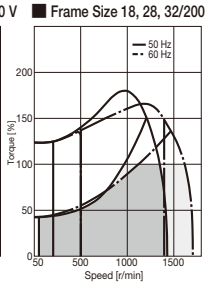

■ Frame Size 40/100 V

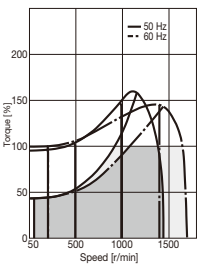

■ Frame Size 40/200 V

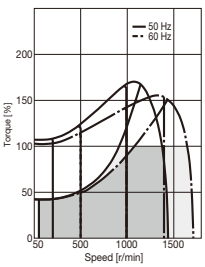

Note: 100 % torque represents the allowable output shaft torque at high speed.

4-3. Performance Table

H Type Speed Control Gearmotors

[Notes]
- The output shaft speed is the value relative to the synchronous speed of the motor and the reduction ratio.
- Three output shaft types, L, R, and T, are available for the H Type.
- The allowable output shaft torque at high speed represents the allowable output shaft torque in the high speed range (r/min).
- The value (%) of the allowable output shaft torque at 50 r/min represents the ratio to the allowable output shaft torque at high speed.
- Allowable output shaft O.H.L. is the value at the middle of the output shaft.
- The "*" mark indicates a limited torque type. Please make sure to check the allowable output shaft torque in the performance table.
- In the performance table, [ ] indicates that the L shaft rotates clockwise and the R and T shafts rotate counterclockwise when viewed from the output shaft side when the connection is made as shown on page 546 (CW). (Refer to the figure on the right)

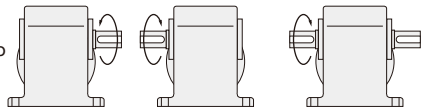

Series	Motor Power	Frame Size	Reduction Ratio	Actual Reduction Ratio	Output Shaft Speed r/min 50 Hz	Output Shaft Speed r/min 60 Hz	Allowable Output Shaft O.H.L. N	Allowable Output Shaft Torque At High Speed N·m	Allowable Output Shaft Torque At 50 r/min (%)	Drawings Foot Mount	Drawings Flange Mount
MINI	1-Phase 15 W	15	1/10	1/10	150	180	343	0.69	70 (100 V) 60 (200 V)	P.305	P.310
			1/15	1/15	100	120	441	0.98			
			1/20	1/20	75	90	539	1.27			
			1/25	1/25	60	72	588	1.67			
			1/30	1/30	50	60	686	1.96			
			1/40	1/40	37.5	45	784	2.65			
			1/50	1/50	30	36	882	3.33			
			1/60	1/60	25	30	882	3.92			
			1/80	1/80	18.8	22.5	980	5.00			
			1/100	1/100	15	18	980	6.27			
			1/120	1/120	12.5	15	1080	7.45			
			1/160	1/160	9.4	11.2	1080	9.80			
			1/200	1/200	7.5	9	1080	12.7			
			1/240	1/240	6.3	7.5	1080	14.7			
		22	1/300	1/300	5	6	1760	16.7	70 (100 V) 60 (200 V)	P.307	P.312
			1/375	1/375	4	4.8	1760	20.6			
			1/450	2/885	3.3	4	1760	25.5			
			1/600	1/600	2.5	3	1760	33.3			
			1/750	1/750	2	2.4	1760	42.1			
			1/900	1/885	1.7	2	1760	50.0			
			1/1200	1/1160	1.3	1.5	1760	66.6			
			1/1500	1/1450	1	1.2	1760	83.3			
			1/1800	1/1711	0.8	1	1760	98.0			
	1-Phase 25 W	15	1/10	4/41	150	180	343	1.08	50 (100 V) 45 (200 V)	P.305	P.310
			1/15	8/123	100	120	441	1.67			
			1/20	2/41	75	90	539	2.25			
			1/25	8/205	60	72	588	2.74			
			1/30	4/123	50	60	686	3.33			
			1/40	1/41	37.5	45	784	4.41			
			1/50	4/205	30	36	882	5.49			
			1/60	20/1189	25	30	882	6.66			
			1/80	1/82	18.8	22.5	980	8.43			
			1/100	2/205	15	18	980	10.8			
			1/120	1/123	12.5	15	1080	12.7			
			1/160	1/164	9.4	11.2	1080	16.7			
			1/200	1/205	7.5	9	1080	20.6			
			1/240	5/1189	6.3	7.5	1080	25.5			
		22	1/300	1/300	5	6	1760	28.4	50 (100 V) 45 (200 V)	P.307	P.312
			1/375	1/375	4	4.8	1760	35.3			
			1/450	2/885	3.3	4	1760	42.1			
			1/600	1/600	2.5	3	1760	55.9			
			1/750	1/750	2	2.4	1760	69.6			
			1/900	1/885	1.7	2	1760	84.3			
		28	1/1200	1/1160	1.3	1.5	2740	108	60 (100 V) (200 V)	P.308	-
			1/1500	1/1450	1	1.2	2740	137			
			1/1800	1/1711	0.8	1	2740	167			

4-3. Performance Table

Series	Motor Power	Frame Size	Reduction Ratio	Actual Reduction Ratio	Output Shaft Speed r/min 50 Hz	Output Shaft Speed r/min 60 Hz	Allowable Output Shaft O.H.L. N	Allowable Output Shaft Torque At High Speed N·m	Allowable Output Shaft Torque At 50 r/min (%)	Drawings Foot Mount	Drawings Flange Mount
MINI	1-Phase 40 W	18	1/10	4/41	150	180	343	1.76	40 (100 V) (200 V)	P.306	P.311
			1/15	8/123	100	120	441	2.65			
			1/20	2/41	75	90	539	3.53			
			1/25	8/205	60	72	588	4.41			
			1/30	4/123	50	60	686	5.29			
			1/40	1/41	37.5	45	784	7.06			
			1/50	4/205	30	36	882	8.82			
			1/60	20/1189	25	30	882	10.8			
			1/80	1/82	18.8	22.5	980	13.7			
			1/100	2/205	15	18	980	16.7			
			1/120	1/123	12.5	15	1080	20.6			
			1/160	1/164	9.4	11.2	1370	26.5			
			1/200	1/205	7.5	9	1370	33.3			
			1/240	1/246	6.3	7.5	1370	40.2			
		28	1/300	1/300	5	6	2740	45.1	40 (100 V) (200 V)	P.308	-
			1/375	1/375	4	4.8	2740	55.9			
			1/450	2/885	3.3	4	2740	67.6			
			1/600	1/600	2.5	3	2740	90.2			
			1/750	1/750	2	2.4	2740	118			
			1/900	1/885	1.7	2	2740	137			
		32	1/1200	1/1200	1.3	1.5	5100	176	40 (100 V) (200 V)	P.309	-
			1/1500	1/1500	1	1.2	5100	225			
			1/1800	1/1800	0.8	1	5100	274			
	1-Phase 60 W	18	1/10	4/41	150	180	343	2.74	60 (100 V) 55 (200 V)	P.306	P.311
			1/15	8/123	100	120	441	4.12			
			1/20	2/41	75	90	539	5.49			
			1/25	8/205	60	72	588	6.96			
			1/30	4/123	50	60	686	8.33			
			1/40	1/41	37.5	45	784	10.8			
			1/50	4/205	30	36	882	13.7			
			1/60	2/123	25	30	882	16.7			
			1/80	1/82	18.8	22.5	1270	20.6			
			1/100	2/205	15	18	1270	26.5			
			1/120	1/123	12.5	15	1370	31.4			
			1/160	1/164	9.4	11.2	1370	42.1			
			1/200	1/205	7.5	9	1370	52.9			
			* 1/240	1/246	6.3	7.5	1370	53.9			
		28	1/300	1/300	5	6	2740	70.6	60 (100 V) 55 (200 V)	P.308	-
			1/375	1/375	4	4.8	2740	88.2			
			1/450	2/885	3.3	4	2740	108			
			1/600	1/600	2.5	3	2740	137			
			1/750	1/750	2	2.4	2740	176			
			1/900	1/885	1.7	2	2740	216			
		32	1/1200	1/1200	1.3	1.5	5100	284	60 (100 V) 55 (200 V)	P.309	-
			1/1500	1/1500	1	1.2	5100	353			
			1/1800	1/1800	0.8	1	5100	421			

Series	Motor Power	Frame Size	Reduction Ratio	Actual Reduction Ratio	Output Shaft Speed r/min 50 Hz	Output Shaft Speed r/min 60 Hz	Allowable Output Shaft O.H.L. N	Allowable Output Shaft Torque At High Speed N·m	Allowable Output Shaft Torque At 50 r/min (%)	Drawings Foot Mount	Drawings Flange Mount
MINI	1-Phase 90 W	18	1/10	4/41	150	180	441	4.12	40 (100 V) (200 V)	P.306	P.311
			1/15	8/123	100	120	588	6.17			
			1/20	2/41	75	90	735	8.33			
			1/25	8/205	60	72	882	10.8			
			1/30	4/123	50	60	980	12.7			
			1/40	1/41	37.5	45	1080	16.7			
			1/50	4/205	30	36	1180	20.6			
			1/60	2/123	25	30	1180	24.5			
			1/80	1/82	18.8	22.5	1270	31.4			
			1/100	2/205	15	18	1270	39.2			
			1/120	1/123	12.5	15	1370	47.0			
			* 1/160	1/164	9.4	11.2	1370	53.9			
			* 1/200	1/205	7.5	9	1370	53.9			
			* 1/240	1/246	6.3	7.5	1370	53.9			
		28	1/300	1/300	5	6	2740	108	40 (100 V) (200 V)	P.308	-
			1/375	1/375	4	4.8	2740	137			
			1/450	2/885	3.3	4	2740	157			
		32	1/600	1/600	2.5	3	5100	216	40 (100 V) (200 V)	P.309	-
			1/750	1/750	2	2.4	5100	265			
			1/900	1/900	1.7	2	5100	314			
		40	1/1200	1/1200	1.3	1.5	7060	421	40 (100 V) (200 V)	P.310	-
			1/1500	1/1500	1	1.2	7060	529			
			1/1800	1/1800	0.8	1	7060	637			

Note 1: Please be sure to read the notes on page 302.

4-4. Drawings

H Type Right Angle Shaft | Shaft Diameter **15** | **Foot** Mounting

<Figure 1>

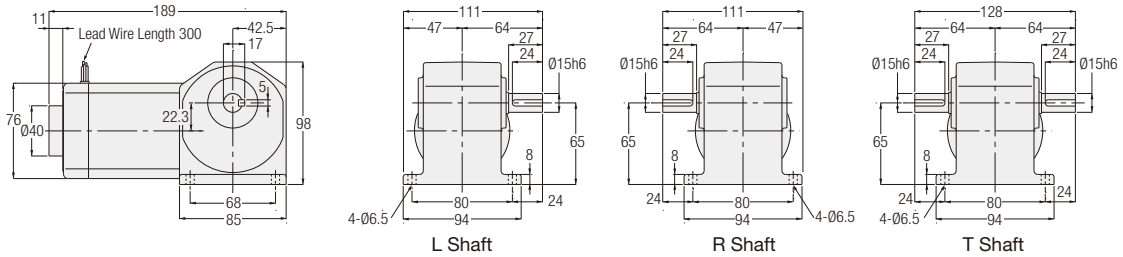

Number of Phases	Power	Part Number	Reduction Ratio	Figure Number	Controller	Approx. Weight (kg)
1-Phase	15 W	HLU-15#-∗∗∗-S15	10, 15, 20, 25, 30, 40, 50, 60, 80, 100, 120, 160, 200, 240	1	Set	3
		HLU-15#-∗∗∗-S15W				
		HLP-15#-∗∗∗-S15	10, 15, 20, 25, 30, 40, 50, 60, 80, 100, 120, 160, 200, 240	1	Sold Separately	3
		HLP-15#-∗∗∗-S15W				
	25 W	HLU-15#-∗∗∗-S25	10, 15, 20, 25, 30, 40, 50, 60, 80, 100, 120, 160, 200, 240	1	Set	3
		HLU-15#-∗∗∗-S25W				
		HLP-15#-∗∗∗-S25	10, 15, 20, 25, 30, 40, 50, 60, 80, 100, 120, 160, 200, 240	1	Sold Separately	3
		HLP-15#-∗∗∗-S25W				

Note: A shaft arrangement (L, R, T) will be indicated as # in the nomenclature. In addition, a reduction ratio will be indicated as ∗∗∗.
Note: Please refer to page 302 for the performance table.

H Type Right Angle Shaft | Shaft Diameter 18 | Foot Mounting

<Figure 1>

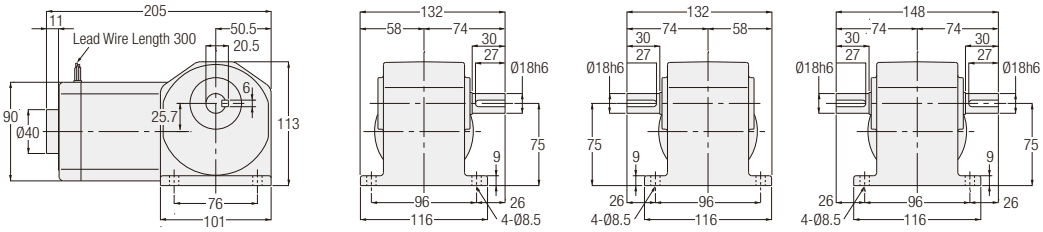

<Figure 2>

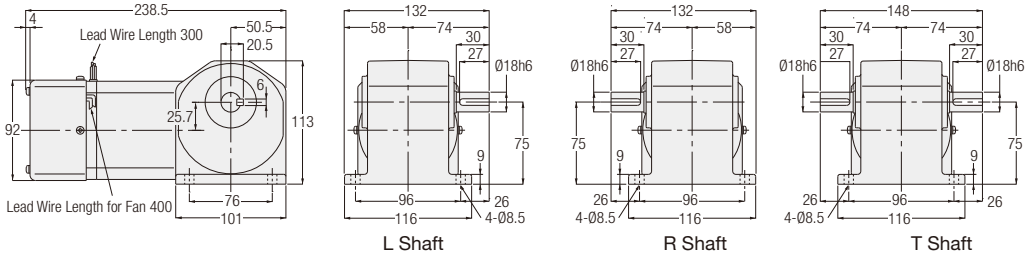

L Shaft R Shaft T Shaft

Number of Phases	Power	Part Number	Reduction Ratio	Figure Number	Controller	Approx. Weight (kg)
1-Phase	40 W	HLU-18#-∗∗∗-S40	10, 15, 20, 25, 30, 40, 50, 60, 80, 100, 120, 160, 200, 240	1	Set	4
		HLU-18#-∗∗∗-S40W				
		HLP-18#-∗∗∗-S40	10, 15, 20, 25, 30, 40, 50, 60, 80, 100, 120, 160, 200, 240	1	Sold Separately	4
		HLP-18#-∗∗∗-S40W				
	60 W	HLU-18#-∗∗∗-S60	10, 15, 20, 25, 30, 40, 50, 60, 80, 100, 120, 160, 200, 240	2	Set	4
		HLU-18#-∗∗∗-S60W				
		HLP-18#-∗∗∗-S60	10, 15, 20, 25, 30, 40, 50, 60, 80, 100, 120, 160, 200, 240	2	Sold Separately	4
		HLP-18#-∗∗∗-S60W				
	90 W	HLU-18#-∗∗∗-S90	10, 15, 20, 25, 30, 40, 50, 60, 80, 100, 120, 160, 200, 240	2	Set	4
		HLU-18#-∗∗∗-S90W				
		HLP-18#-∗∗∗-S90	10, 15, 20, 25, 30, 40, 50, 60, 80, 100, 120, 160, 200, 240	2	Sold Separately	4
		HLP-18#-∗∗∗-S90W				

Note: A shaft arrangement (L, R, T) will be indicated as # in the nomenclature. In addition, a reduction ratio will be indicated as ∗∗∗.
Note: Please refer to page 303 for the performance table.

H Type Right Angle Shaft | Shaft Diameter 22 | **Foot** Mounting

<Figure 1>

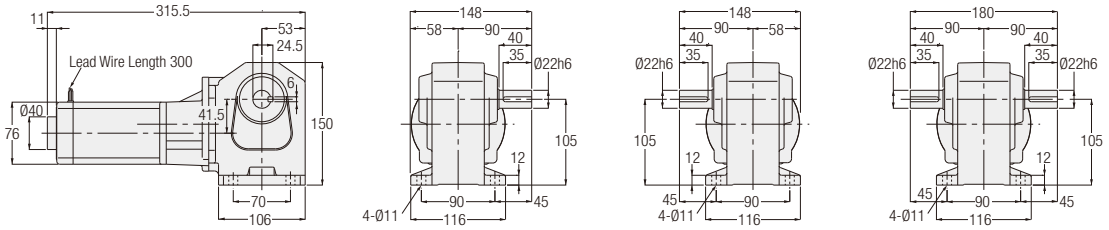

L Shaft R Shaft T Shaft

Number of Phases	Power	Part Number	Reduction Ratio	Figure Number	Controller	Approx. Weight (kg)
1-Phase	15 W	HLU-22#-∗∗∗-S15	300, 375, 450, 600, 750, 900, 1200, 1500, 1800	1	Set	6
		HLU-22#-∗∗∗-S15W				
		HLP-22#-∗∗∗-S15	300, 375, 450, 600, 750, 900, 1200, 1500, 1800	1	Sold Separately	6
		HLP-22#-∗∗∗-S15W				
	25 W	HLU-22#-∗∗∗-S25	300, 375, 450, 600, 750, 900	1	Set	6
		HLU-22#-∗∗∗-S25W				
		HLP-22#-∗∗∗-S25	300, 375, 450, 600, 750, 900	1	Sold Separately	6
		HLP-22#-∗∗∗-S25W				

Note: A shaft arrangement (L, R, T) will be indicated as # in the nomenclature. In addition, a reduction ratio will be indicated as ∗∗∗.
Note: Please refer to page 302 for the performance table.

H Type Right Angle Shaft | Shaft Diameter 28 | Foot Mounting

<Figure 1>

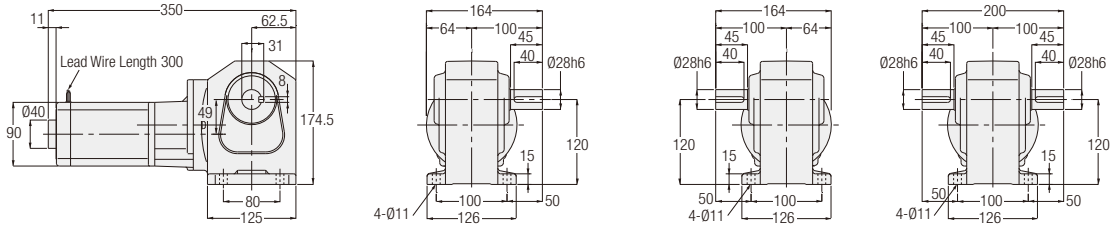

<Figure 2>

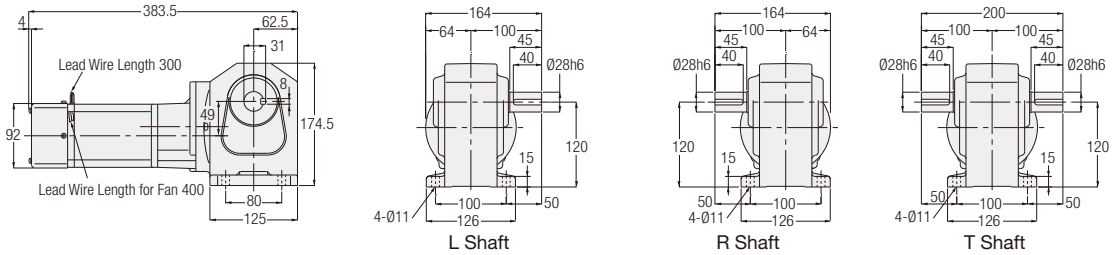

L Shaft R Shaft T Shaft

Number of Phases	Power	Part Number	Reduction Ratio	Figure Number	Controller	Approx. Weight (kg)
1-Phase	25 W	HLU-28#-∗∗∗-S25	1200, 1500, 1800	1	Set	9
		HLU-28#-∗∗∗-S25W				
		HLP-28#-∗∗∗-S25	1200, 1500, 1800	1	Sold Separately	9
		HLP-28#-∗∗∗-S25W				
	40 W	HLU-28#-∗∗∗-S40	300, 375, 450, 600, 750, 900	1	Set	9
		HLU-28#-∗∗∗-S40W				
		HLP-28#-∗∗∗-S40	300, 375, 450, 600, 750, 900	1	Sold Separately	9
		HLP-28#-∗∗∗-S40W				
	60 W	HLU-28#-∗∗∗-S60	300, 375, 450, 600, 750, 900	2	Set	9
		HLU-28#-∗∗∗-S60W				
		HLP-28#-∗∗∗-S60	300, 375, 450, 600, 750, 900	2	Sold Separately	9
		HLP-28#-∗∗∗-S60W				
	90 W	HLU-28#-∗∗∗-S90	300, 375, 450	2	Set	9
		HLU-28#-∗∗∗-S90W				
		HLP-28#-∗∗∗-S90	300, 375, 450	2	Sold Separately	9
		HLP-28#-∗∗∗-S90W				

Note: A shaft arrangement (L, R, T) will be indicated as # in the nomenclature. In addition, a reduction ratio will be indicated as ∗∗∗.
Note: Please refer to page 302 for the performance table.

H Type Right Angle Shaft | Shaft Diameter **32** | **Foot** Mounting

<Figure 1>

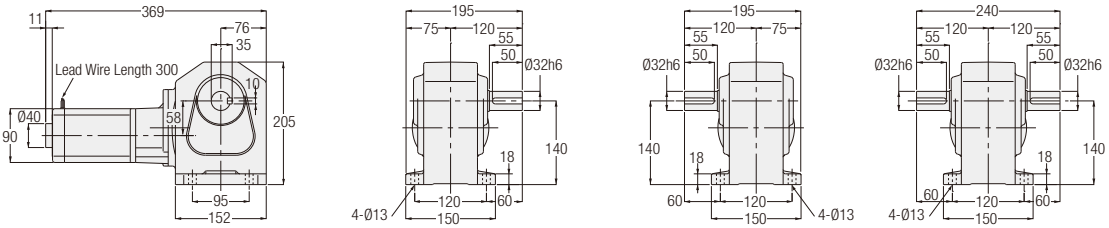

<Figure 2>

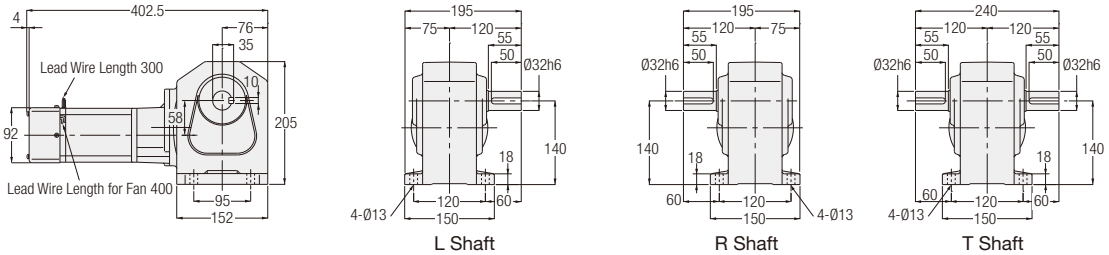

Number of Phases	Power	Part Number	Reduction Ratio	Figure Number	Controller	Approx. Weight (kg)
1-Phase	40 W	HLU-32#-∗∗∗-S40	1200, 1500, 1800	1	Set	15
		HLU-32#-∗∗∗-S40W				
		HLP-32#-∗∗∗-S40	1200, 1500, 1800	1	Sold Separately	15
		HLP-32#-∗∗∗-S40W				
	60 W	HLU-32#-∗∗∗-S60	1200, 1500, 1800	2	Set	15
		HLU-32#-∗∗∗-S60W				
		HLP-32#-∗∗∗-S60	1200, 1500, 1800	2	Sold Separately	15
		HLP-32#-∗∗∗-S60W				
	90 W	HLU-32#-∗∗∗-S90	600, 750, 900	2	Set	15
		HLU-32#-∗∗∗-S90W				
		HLP-32#-∗∗∗-S90	600, 750, 900	2	Sold Separately	15
		HLP-32#-∗∗∗-S90W				

Note: A shaft arrangement (L, R, T) will be indicated as # in the nomenclature. In addition, a reduction ratio will be indicated as ∗∗∗.
Note: Please refer to page 303 for the performance table.

H Type Right Angle Shaft | Shaft Diameter 40 | Foot Mounting

<Figure 1>

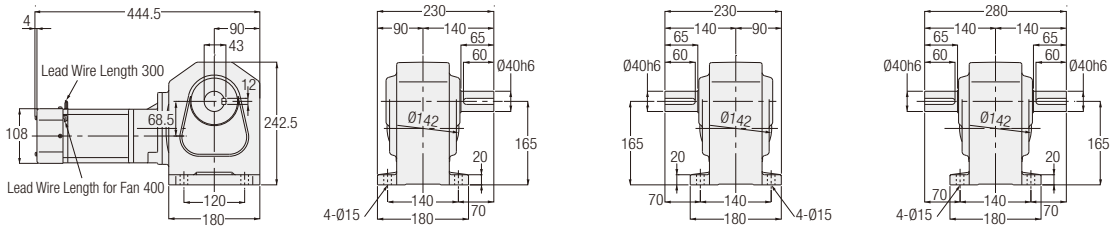

L Shaft R Shaft T Shaft

Number of Phases	Power	Part Number	Reduction Ratio	Figure Number	Controller	Approx. Weight (kg)
1-Phase	90 W	HLU-40#-∗∗∗-S90	1200, 1500, 1800	1	Set	22
		HLU-40#-∗∗∗-S90W				
		HLP-40#-∗∗∗-S90	1200, 1500, 1800	1	Sold Separately	22
		HLP-40#-∗∗∗-S90W				

Note: A shaft arrangement (L, R, T) will be indicated as # in the nomenclature. In addition, a reduction ratio will be indicated as ∗∗∗.
Note: Please refer to page 304 for the performance table.

H Type Right Angle Shaft | Shaft Diameter 15 | Flange Mounting

<Figure 2>

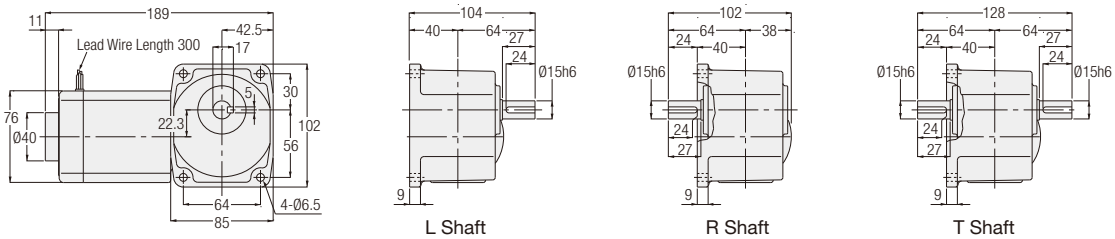

L Shaft R Shaft T Shaft

Number of Phases	Power	Part Number	Reduction Ratio	Figure Number	Controller	Approx. Weight (kg)
1-Phase	15 W	HFU-15#-∗∗∗-S15	10, 15, 20, 25, 30, 40, 50, 60, 80, 100, 120, 160, 200, 240	2	Set	3
		HFU-15#-∗∗∗-S15W				
		HFP-15#-∗∗∗-S15	10, 15, 20, 25, 30, 40, 50, 60, 80, 100, 120, 160, 200, 240	2	Sold Separately	3
		HFP-15#-∗∗∗-S15W				
	25 W	HFU-15#-∗∗∗-S25	10, 15, 20, 25, 30, 40, 50, 60, 80, 100, 120, 160, 200, 240	2	Set	3
		HFU-15#-∗∗∗-S25W				
		HFP-15#-∗∗∗-S25	10, 15, 20, 25, 30, 40, 50, 60, 80, 100, 120, 160, 200, 240	2	Sold Separately	3
		HFP-15#-∗∗∗-S25W				

Note: A shaft arrangement (L, R, T) will be indicated as # in the nomenclature. In addition, a reduction ratio will be indicated as ∗∗∗.
Note: Please refer to page 302 for the performance table.

H Type Right Angle Shaft | Shaft Diameter **18** | **Flange** Mounting

<Figure 1>

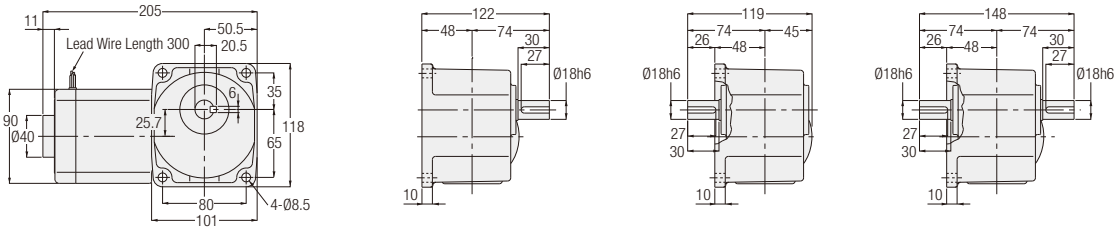

<Figure 2>

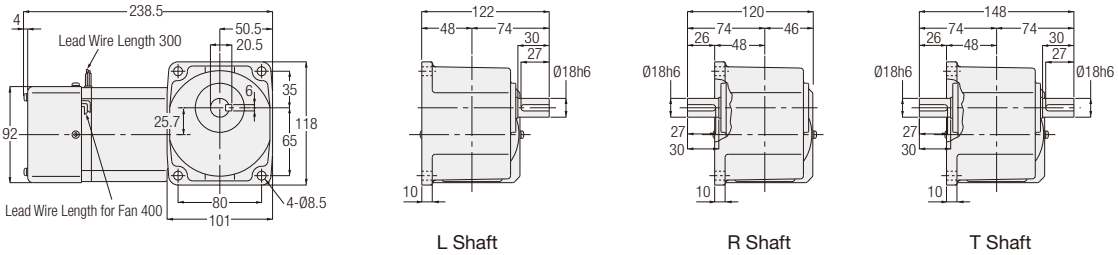

L Shaft R Shaft T Shaft

Number of Phases	Power	Part Number	Reduction Ratio	Figure Number	Controller	Approx. Weight (kg)
1-Phase	40 W	HFU-18#-∗∗∗-S40	10, 15, 20, 25, 30, 40, 50, 60, 80, 100, 120, 160, 200, 240	1	Set	4
		HFU-18#-∗∗∗-S40W				
		HFP-18#-∗∗∗-S40	10, 15, 20, 25, 30, 40, 50, 60, 80, 100, 120, 160, 200, 240	1	Sold Separately	4
		HFP-18#-∗∗∗-S40W				
	60 W	HFU-18#-∗∗∗-S60	10, 15, 20, 25, 30, 40, 50, 60, 80, 100, 120, 160, 200, 240	2	Set	4
		HFU-18#-∗∗∗-S60W				
		HFP-18#-∗∗∗-S60	10, 15, 20, 25, 30, 40, 50, 60, 80, 100, 120, 160, 200, 240	2	Sold Separately	4
		HFP-18#-∗∗∗-S60W				
	90 W	HFU-18#-∗∗∗-S90	10, 15, 20, 25, 30, 40, 50, 60, 80, 100, 120, 160, 200, 240	2	Set	4
		HFU-18#-∗∗∗-S90W				
		HFP-18#-∗∗∗-S90	10, 15, 20, 25, 30, 40, 50, 60, 80, 100, 120, 160, 200, 240	2	Sold Separately	4
		HFP-18#-∗∗∗-S90W				

Note: A shaft arrangement (L, R, T) will be indicated as # in the nomenclature. In addition, a reduction ratio will be indicated as ∗∗∗.
Note: Please refer to page 303 for the performance table.

H Type Right Angle Shaft | Shaft Diameter **22** | **Flange** Mounting

<Figure 1>

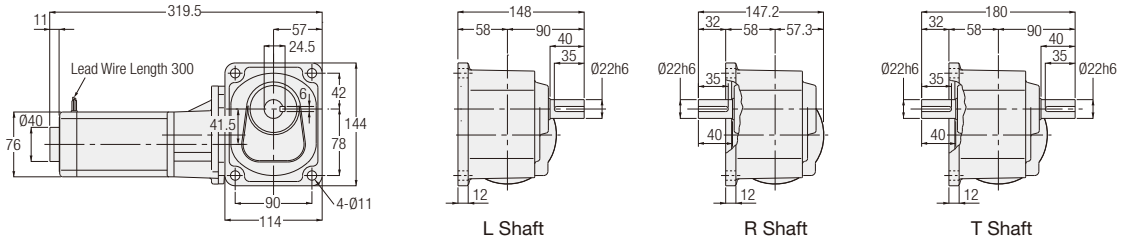

Number of Phases	Power	Part Number	Reduction Ratio	Figure Number	Controller	Approx. Weight (kg)
1-Phase	15 W	HFU-22#-∗∗∗-S15	300, 375, 450, 600, 750, 900, 1200, 1500, 1800	1	Set	6
		HFU-22#-∗∗∗-S15W				
		HFP-22#-∗∗∗-S15	300, 375, 450, 600, 750, 900, 1200, 1500, 1800	1	Sold Separately	6
		HFP-22#-∗∗∗-S15W				
	25 W	HFU-22#-∗∗∗-S25	300, 375, 450, 600, 750, 900	1	Set	6
		HFU-22#-∗∗∗-S25W				
		HFP-22#-∗∗∗-S25	300, 375, 450, 600, 750, 900	1	Sold Separately	6
		HFP-22#-∗∗∗-S25W				

Note: A shaft arrangement (L, R, T) will be indicated as # in the nomenclature. In addition, a reduction ratio will be indicated as ∗∗∗.
Note: Please refer to page 302 for the performance table.

MEMO

5. Gearboxes (Double Shaft Type)

5-1. Performance Table

H2 Type Gearboxes (Double Shaft Type)

[Notes]
- The motor power class value is the value when a 4 pole motor is used.
- Allowable output shaft O.H.L. is the value at 20 mm from the end of the output shaft.
- For the rotational direction of the output shaft, please refer to the figure shown below.
- The "*" mark indicates a limited torque type. Please make sure to check the allowable output shaft torque in the performance table.

■ Rotational Direction Relationship

The rotational direction shown below with arrow illustrates the rotation relationship between the output shaft / input shaft and is no way illustrating limitations in rotational direction.

Power	Reduction Ratio
0.2 kW	1/5 to 1/60 and 1/600 to 1/1500
0.4 kW,0.75 kW	1/5 to 1/60 and 1/300 to 1/1500
1.5 kW,2.2 kW	1/5 to 1/30

Power	Reduction Ratio
0.2 kW	1/80 to 1/450
0.4 kW,0.75 kW	1/80 to 1/240
1.5 kW,2.2 kW	1/40 to 1/240

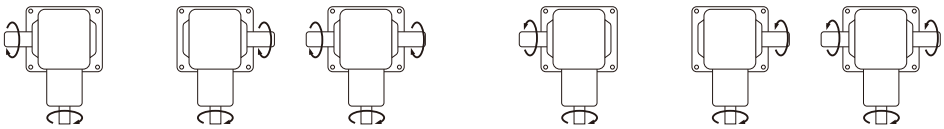

L Shaft R Shaft T Shaft L Shaft R Shaft T Shaft

4 Poles Motor Power Class	Frame Size	Reduction Ratio	Actual Reduction Ratio	Allowable Output Shaft Torque Input (1500 r/min)	Allowable O.H.L.		Drawings	
					N		Foot Mount	Flange Mount
				N·m	Input Shaft	Output Shaft		
0.2 kW	22	1/5	1/5	5.7	245	588	P.317	P.320
		1/10	1/10	12		931		
		1/15	1/15	18		1030		
		1/20	1/20	23		1180		
		1/25	1/25	28		1270		
		1/30	1/30	34		1370		
		1/40	1/40	46		1570		
		1/50	1/50	57		1720		
		1/60	1/59	69		1810		
	28	1/80	1/80	88	245	2450	P.317	-
		1/100	1/100	111		2650		
		1/120	1/120	133		2740		
		1/160	1/160	177		2840		
		1/200	1/200	221		2840		
		1/240	1/236	245		2840		
	32	1/300	7/2120	294	245	3820	P.318	-
		1/375	7/2650	368		4120		
		1/450	7/3127	431		4120		
	40	1/600	7/4240	588	245	6760	P.319	-
		1/750	7/5300	735		6760		
		1/900	7/6360	764		6760		
		* 1/1200	7/8480	764		6760		
		* 1/1500	7/10600	764		6760		

5-1. Performance Table

4 Poles Motor Power Class	Frame Size	Reduction Ratio	Actual Reduction Ratio	Allowable Output Shaft Torque Input (1500 r/min)	Allowable O.H.L.		Drawings
					N		Foot Mount
				N·m	Input Shaft	Output Shaft	
0.4 kW	28	1/5	1/5	12	294	931	P.317
		1/10	1/10	23		1470	
		1/15	1/15	34		1670	
		1/20	1/20	46		1860	
		1/25	1/25	57		2010	
		1/30	1/30	69		2210	
		1/40	1/40	92		2450	
		1/50	1/50	115		2650	
		1/60	1/59	137		2740	
	32	1/80	1/80	177	294	3430	P.318
		1/100	1/100	221		3820	
		1/120	1/120	266		4120	
		1/160	1/160	355		4120	
		1/200	1/200	431		4120	
		* 1/240	1/236	431		4120	
	40	1/300	7/2080	572	294	6760	P.319
		1/375	7/2600	715		6760	
		* 1/450	7/3120	764		6760	
	50	1/600	21/12220	1150	294	9510	P.320
		* 1/750	1/728	1230		9510	
		* 1/900	7/6240	1230		9510	
		* 1/1200	21/24440	1230		9510	
		* 1/1500	1/1456	1230		9510	
0.75 kW	32	1/5	1/5	22	392	1520	P.318
		1/10	1/10	43		2010	
		1/15	1/15	65		2210	
		1/20	1/20	86		2450	
		1/25	1/25	108		2740	
		1/30	1/30	128		2940	
		1/40	1/40	172		3430	
		1/50	1/50	215		3820	
		1/60	1/59	258		4120	
	40	1/80	1/80	332	392	5780	P.319
		1/100	1/100	416		6080	
		1/120	1/120	498		6270	
		1/160	1/160	664		6470	
		* 1/200	1/200	764		6660	
		* 1/240	1/240	764		6660	
	50	1/300	7/2120	1070	392	7740	P.320
		* 1/375	7/2650	1230		8040	
		* 1/450	7/3180	1230		8530	
1.5 kW	40	1/5	1/5	43	392	2650	P.319
		1/10	1/10	86		3530	
		1/15	1/15	128		4410	
		1/20	1/20	172		4700	
		1/25	1/25	215		5100	
		1/30	1/30	258		5290	
		1/40	1/40	344		5590	
		1/50	1/50	429		5880	
		1/60	1/60	515		6080	
	50	1/80	3/235	664	392	8530	P.320
		1/100	1/98	830		8820	
		1/120	1/120	1000		9020	
		* 1/160	3/470	1230		9310	
		* 1/200	1/196	1230		9510	
		* 1/240	1/240	1230		9510	

4 Poles Motor Power Class	Frame Size	Reduction Ratio	Actual Reduction Ratio	Allowable Output Shaft Torque Input (1500 r/min)	Allowable O.H.L.		Drawings
					N		Foot Mount
				N·m	Input Shaft	Output Shaft	
2.2 kW	50	1/5	1/5	63	392	3920	P.320
		1/10	1/10	126		4410	
		1/15	1/15	189		4900	
		1/20	12/235	252		5490	
		1/25	2/49	315		6080	
		1/30	1/30	378		6570	
		1/40	1/40	487		7060	
		1/50	1/50	609		7550	
		1/60	1/60	731		8130	
		1/80	3/235	974		8430	
		1/100	1/98	1220		8820	
		* 1/120	1/120	1230		8820	

Note 1: Please be sure to read the notes on page 314.

5-2. Drawings

H2 Type Right Angle Shaft | Shaft Diameter **22** | **Foot** Mounting

<Figure 1>

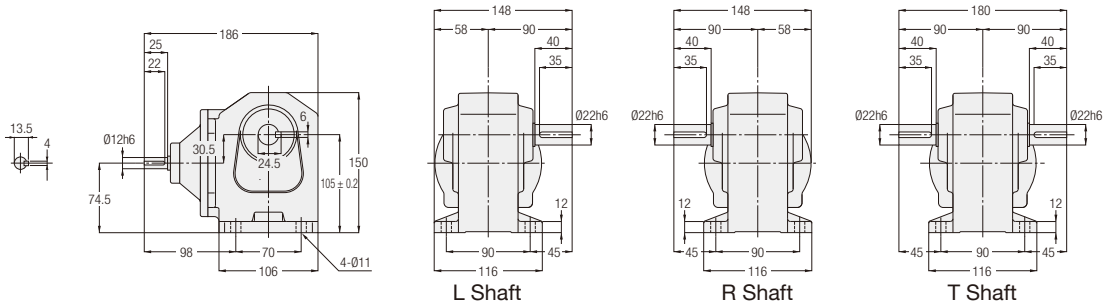

Power Class	Part Number	Reduction Ratio	Figure Number	Approx. Weight (kg)
0.2 kW	H2L-22#-∗∗∗-020	5, 10, 15, 20, 25, 30, 40, 50, 60	1	3.5

Note: A shaft arrangement (L, R, T) will be indicated as # in the nomenclature. In addition, a reduction ratio will be indicated as ∗∗∗.
Note: Please refer to page 314 for the performance table.

H2 Type Right Angle Shaft | Shaft Diameter **28** | **Foot** Mounting

<Figure 2>

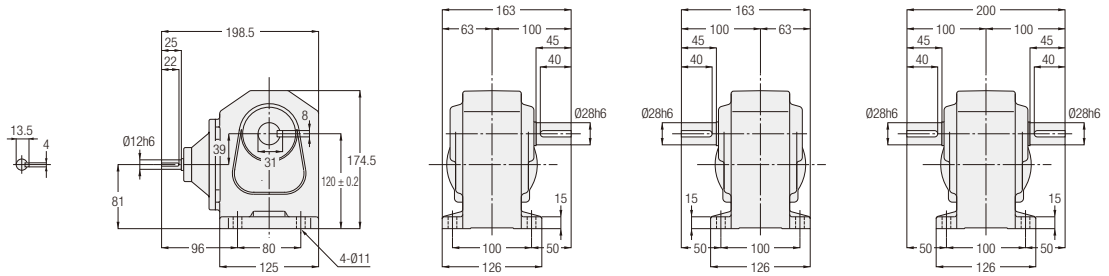

<Figure 3>

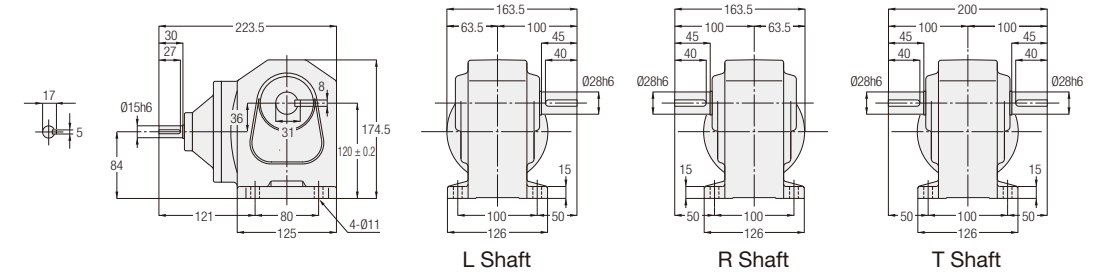

Power Class	Part Number	Reduction Ratio	Figure Number	Approx. Weight (kg)
0.2 kW	H2L-28#-∗∗∗-020	80, 100, 120, 160, 200, 240	2	5.5
0.4 kW	H2L-28#-∗∗∗-040	5, 10, 15, 20, 25, 30, 40, 50, 60	3	5.5

Note: A shaft arrangement (L, R, T) will be indicated as # in the nomenclature. In addition, a reduction ratio will be indicated as ∗∗∗.
Note: Please refer to page 314 for the performance table.

H2 Type Right Angle Shaft | Shaft Diameter 32 | Foot Mounting

<Figure 1>

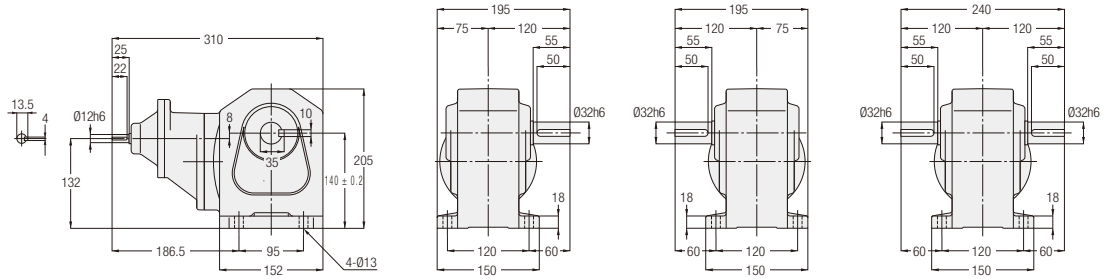

<Figure 2>

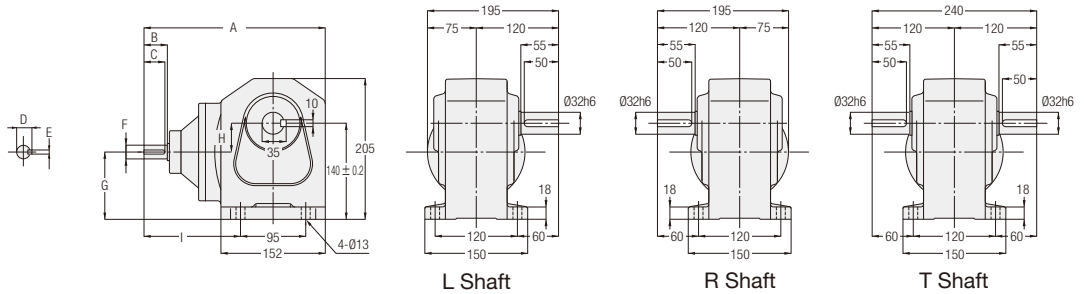

L Shaft R Shaft T Shaft

Power Class	Part Number	Reduction Ratio	Figure Number	Approx. Weight (kg)	A	B	C	D	E	F	G	H	I
0.2 kW	H2L-32#-∗∗∗-020	300, 375, 450	1	9.5	-	-	-	-	-	-	-	-	-
0.4 kW	H2L-32#-∗∗∗-040	80, 100, 120, 160, 200, 240	2	8.5	242.5	30	27	17	5	Ø15h6	95	45	119
0.75 kW	H2L-32#-∗∗∗-075	5, 10, 15, 20, 25, 30, 40, 50, 60	2	8.5	264	35	32	22.5	6	Ø20h6	98	42	140.5

Note: A shaft arrangement (L, R, T) will be indicated as # in the nomenclature. In addition, a reduction ratio will be indicated as ∗∗∗.
Note: Please refer to page 314 for the performance table.

H2 Type Right Angle Shaft | Shaft Diameter **40** | **Foot** Mounting

<Figure 1>

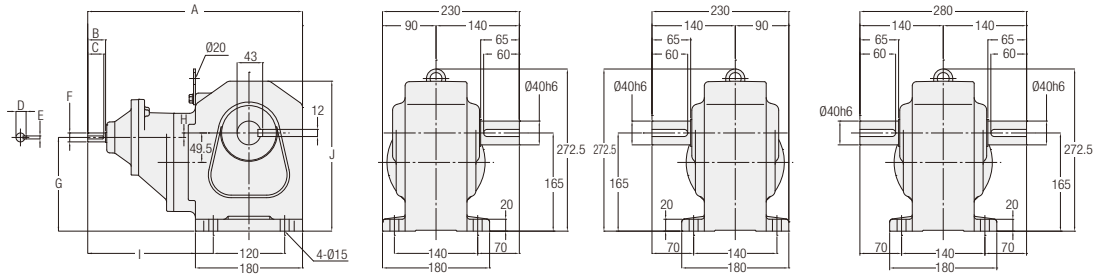

<Figure 2>

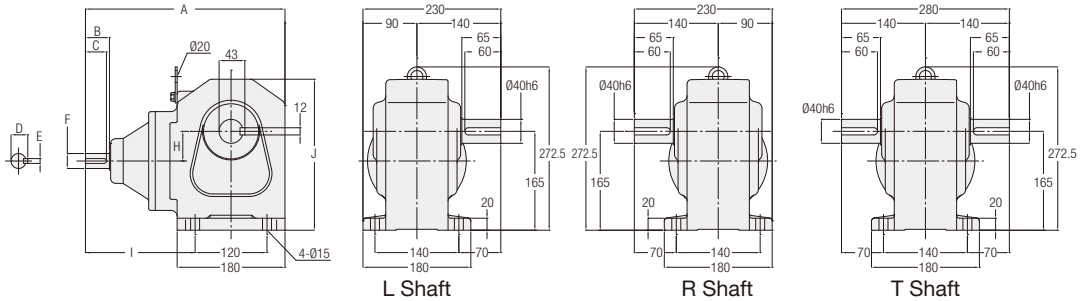

Power Class	Part Number	Reduction Ratio	Figure Number	Approx. Weight (kg)	A	B	C	D	E	F	G	H	I	J
0.2 kW	H2L-40#-∗∗∗-020	600, 750, 900, 1200, 1500	1	18	328.5	25	22	13.5	4	Ø12h6	145.5	19.5	178.5	242.5
0.4 kW	H2L-40#-∗∗∗-040	300, 375, 450	1	19	361	30	27	17	5	Ø15h6	157.5	7.5	211	252
0.75 kW	H2L-40#-∗∗∗-075	80, 100, 120, 160, 200, 240	2	17	282.5	35	32	22.5	6	Ø20h6	-	53.5	132.5	242.5
1.5 kW	H2L-40#-∗∗∗-150	5, 10, 15, 20, 25, 30, 40, 50, 60	2	17.5	333	40	35	28	8	Ø25h6	-	49.5	183	252

Note: A shaft arrangement (L, R, T) will be indicated as # in the nomenclature. In addition, a reduction ratio will be indicated as ∗∗∗.
Note: Please refer to page 314 for the performance table.

H2 Type Right Angle Shaft | Shaft Diameter 50 | Foot Mounting

<Figure 1>

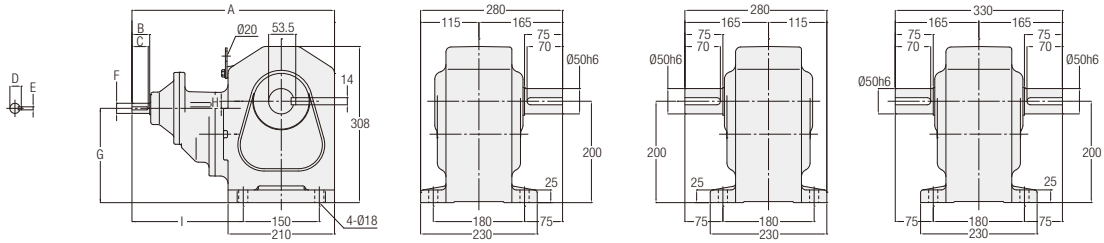

<Figure 2>

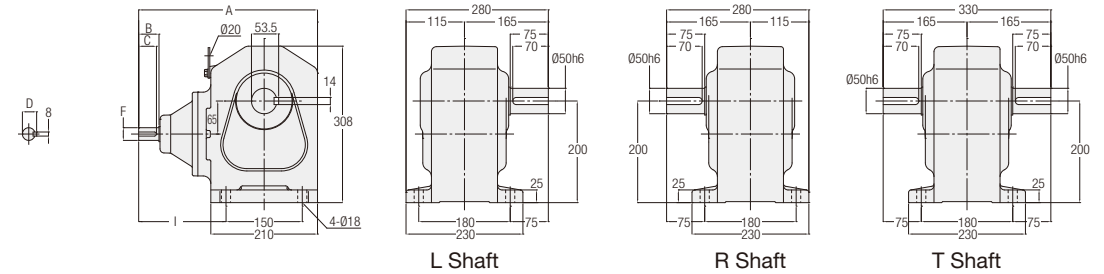

L Shaft R Shaft T Shaft

Power Class	Part Number	Reduction Ratio	Figure Number	Approx. Weight (kg)	A	B	C	D	E	F	G	H	I
0.4 kW	H2L-50#-∗∗∗-040	600, 750, 900, 1200, 1500	1	48.5	380	30	27	17	5	Ø15h6	177	23	200
0.75 kW	H2L-50#-∗∗∗-075	300, 375, 450	1	49.5	399.5	35	32	22.5	6	Ø20h6	186	14	219.5
1.5 kW	H2L-50#-∗∗∗-150	80, 100, 120, 160, 200, 240	2	47.5	352	40	35	28	-	Ø25h6	-	-	172
2.2 kW	H2L-50#-∗∗∗-220	5, 10, 15, 20, 25, 30, 40, 50, 60	2	47	364	45	40	33	-	Ø30h6	-	-	184

Note: A shaft arrangement (L, R, T) will be indicated as # in the nomenclature. In addition, a reduction ratio will be indicated as ∗∗∗.
Note: Please refer to page 315 for the performance table.

H2 Type Right Angle Shaft | Shaft Diameter 22 | Flange Mounting

<Figure 1>

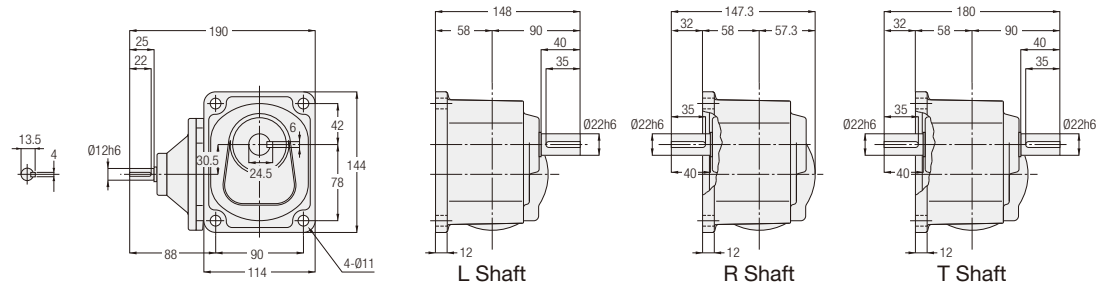

L Shaft R Shaft T Shaft

Power Class	Part Number	Reduction Ratio	Figure Number	Approx. Weight (kg)
0.2 kW	H2F-22#-∗∗∗-020	5, 10, 15, 20, 25, 30, 40, 50, 60	1	3.5

Note: A shaft arrangement (L, R, T) will be indicated as # in the nomenclature. In addition, a reduction ratio will be indicated as ∗∗∗.
Note: Please refer to page 314 for the performance table.

MEMO

6. S-Type Gearboxes (Type That Can Be Equipped with Designated Motor)

6-1. Performance Table

H2 Type S-Type Gearboxes (Type which Can be Equipped with Designated Motor)

[Notes]
- The value of the allowable output shaft torque is the value when a 4 pole motor is used.
- When using an output shaft for a motor other than a 4 pole motor, the value obtained by multiplying the torque by the torque correction coefficient shown on page 626 shall be the allowable output shaft torque at the rotation.
- Allowable output shaft O.H.L. is the value at 20 mm from the end of the output shaft.
- For the rotational direction of the output shaft, please refer to the figure shown below.
- The "*" mark indicates a limited torque type. Please make sure to check the allowable output shaft torque in the performance table.

■ Rotational Direction Relationship

The rotational direction shown below with arrow illustrates the rotation relationship between the output shaft / input shaft and is no way illustrating limitations in rotational direction.

Power	Reduction Ratio
0.2 kW	1/5 to 1/60 and 1/600 to 1/1500
0.4 kW,0.75 kW	1/5 to 1/60 and 1/300 to 1/1500
1.5 kW,2.2 kW	1/5 to 1/30

Power	Reduction Ratio
0.2 kW	1/80 to 1/450
0.4 kW,0.75 kW	1/80 to 1/240
1.5 kW,2.2 kW	1/40 to 1/240

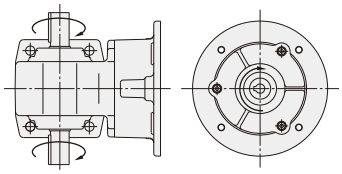

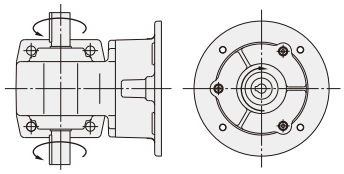

4 Poles Motor Power Class	Frame Size	Reduction Ratio	Actual Reduction Ratio	Allowable Output Shaft Torque N·m 50 Hz	Allowable Output Shaft Torque N·m 60 Hz	Allowable Output Shaft O.H.L. N	Drawings Foot Mount	Drawings Flange Mount
0.2 kW	22	1/5	1/5	5.7	4.8	588	P.325	P.329
		1/10	1/10	12	9.5	931		
		1/15	1/15	18	15	1030		
		1/20	1/20	23	19	1180		
		1/25	1/25	28	24	1270		
		1/30	1/30	34	28	1370		
		1/40	1/40	46	38	1570		
		1/50	1/50	57	48	1720		
		1/60	1/59	69	57	1810		
	28	1/80	1/80	88	74	2450	P.325	-
		1/100	1/100	111	92	2650		
		1/120	1/120	133	111	2740		
		1/160	1/160	177	148	2840		
		1/200	1/200	221	184	2840		
		1/240	1/236	245	221	2840		
	32	1/300	7/2120	294	245	3820	P.326	-
		1/375	7/2650	368	306	4120		
		1/450	7/3127	431	368	4120		
	40	1/600	7/4240	588	490	6760	P.327	-
		1/750	7/5300	735	613	6760		
		1/900	7/6360	764	735	6760		
		* 1/1200	7/8480	764	764	6760		
		* 1/1500	7/10600	764	764	6760		

6-1. Performance Table

4 Poles Motor Power Class	Frame Size	Reduction Ratio	Actual Reduction Ratio	Allowable Output Shaft Torque N·m 50 Hz	Allowable Output Shaft Torque N·m 60 Hz	Allowable Output Shaft O.H.L. N	Drawings Foot Mount
0.4 kW	28	1/5	1/5	12	9.5	931	P.325
		1/10	1/10	23	19	1470	
		1/15	1/15	34	28	1670	
		1/20	1/20	46	38	1860	
		1/25	1/25	57	48	2010	
		1/30	1/30	69	57	2210	
		1/40	1/40	92	76	2450	
		1/50	1/50	115	95	2650	
		1/60	1/59	137	115	2740	
	32	1/80	1/80	177	148	3430	P.326
		1/100	1/100	221	184	3820	
		1/120	1/120	266	221	4120	
		1/160	1/160	355	295	4120	
		1/200	1/200	431	369	4120	
		* 1/240	1/236	431	431	4120	
	40	1/300	7/2080	572	477	6760	P.327
		1/375	7/2600	715	597	6760	
		* 1/450	7/3120	764	715	6760	
	50	1/600	21/12220	1150	955	9510	P.328
		* 1/750	1/728	1230	1190	9510	
		* 1/900	7/6240	1230	1230	9510	
		* 1/1200	21/24440	1230	1230	9510	
		* 1/1500	1/1456	1230	1230	9510	
0.75 kW	32	1/5	1/5	22	18	1520	P.326
		1/10	1/10	43	36	2010	
		1/15	1/15	65	54	2210	
		1/20	1/20	86	72	2450	
		1/25	1/25	108	89	2740	
		1/30	1/30	128	107	2940	
		1/40	1/40	172	143	3430	
		1/50	1/50	215	179	3820	
		1/60	1/59	258	215	4120	
	40	1/80	1/80	332	277	5780	P.327
		1/100	1/100	416	346	6080	
		1/120	1/120	498	415	6270	
		1/160	1/160	664	554	6470	
		* 1/200	1/200	764	692	6660	
		* 1/240	1/240	764	764	6660	
	50	1/300	7/2120	1070	895	7740	P.328
		* 1/375	7/2650	1230	1120	8040	
		* 1/450	7/3180	1230	1230	8530	
1.5 kW	40	1/5	1/5	43	36	2650	P.327
		1/10	1/10	86	72	3530	
		1/15	1/15	128	107	4410	
		1/20	1/20	172	143	4700	
		1/25	1/25	215	179	5100	
		1/30	1/30	258	215	5290	
		1/40	1/40	344	277	5590	
		1/50	1/50	429	346	5880	
		1/60	1/60	515	415	6080	
	50	1/80	3/235	664	554	8530	P.328
		1/100	1/98	830	692	8820	
		1/120	1/120	1000	830	9020	
		* 1/160	3/470	1230	1110	9310	
		* 1/200	1/196	1230	1230	9510	
		* 1/240	1/240	1230	1230	9510	

4 Poles Motor Power Class	Frame Size	Reduction Ratio	Actual Reduction Ratio	Allowable Output Shaft Torque N·m		Allowable Output Shaft O.H.L.	Drawings
				50 Hz	60 Hz	N	Foot Mount
2.2 kW	50	1/5	1/5	63	53	3920	P.328
		1/10	1/10	126	105	4410	
		1/15	1/15	189	157	4900	
		1/20	12/235	252	210	5490	
		1/25	2/49	315	263	6080	
		1/30	1/30	378	315	6570	
		1/40	1/40	487	406	7060	
		1/50	1/50	609	507	7550	
		1/60	1/60	731	609	8130	
		1/80	3/235	974	812	8430	
		1/100	1/98	1220	1010	8820	
		* 1/120	1/120	1230	1220	8820	

Note 1: Please be sure to read the notes on page 322.

6-2. Drawings

H2 Type Right Angle Shaft | Shaft Diameter **22** | **Foot** Mounting

<Figure 1>

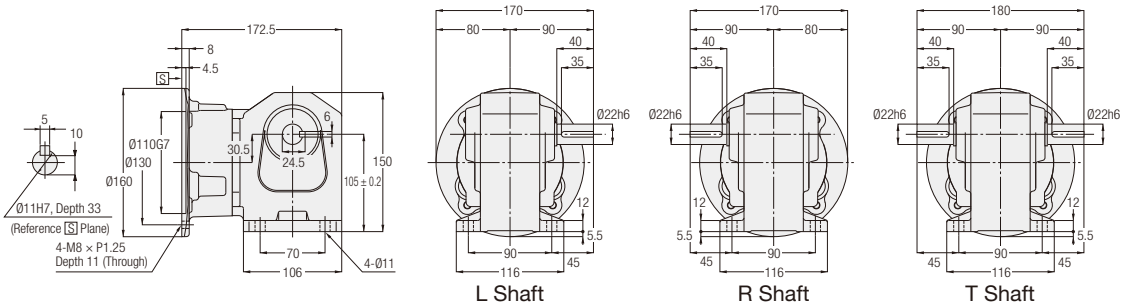

Power Class	Part Number	Reduction Ratio	Figure Number	Approx. Weight (kg)
0.2 kW	H2LS-22#-∗∗∗-020	5, 10, 15, 20, 25, 30, 40, 50, 60	1	4.5

Note: A shaft arrangement (L, R, T) will be indicated as # in the nomenclature. In addition, a reduction ratio will be indicated as ∗∗∗.
Note: Please refer to page 322 for the performance table.
Note: Please refer to page 629 for the details of the motor mounting area.

H2 Type Right Angle Shaft | Shaft Diameter **28** | **Foot** Mounting

<Figure 2>

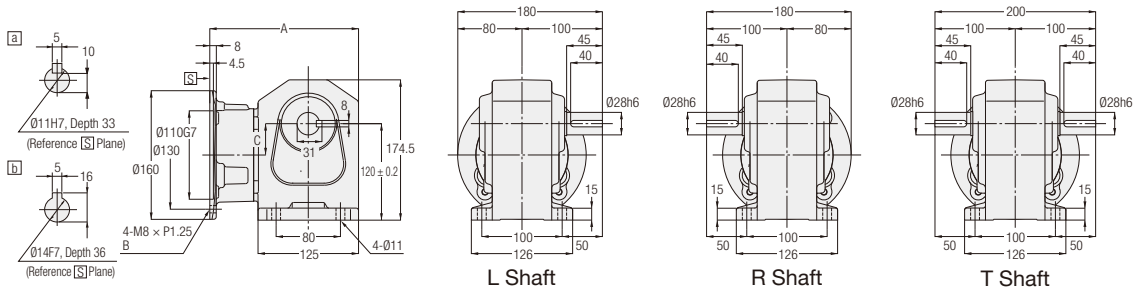

Power Class	Part Number	Reduction Ratio	Figure Number	Approx. Weight (kg)	Input Shaft	A	B	C
0.2 kW	H2LS-28#-∗∗∗-020	80, 100, 120, 160, 200, 240	2	6.5	a	185	Depth 11 (Through)	39
0.4 kW	H2LS-28#-∗∗∗-040	5, 10, 15, 20, 25, 30, 40, 50, 60	2	6.5	b	201	Depth 20	36

Note: A shaft arrangement (L, R, T) will be indicated as # in the nomenclature. In addition, a reduction ratio will be indicated as ∗∗∗.
Note: Please refer to page 322 for the performance table.
Note: Please refer to page 629 for the details of the motor mounting area.

H2 Type Right Angle Shaft | Shaft Diameter 32 | Foot Mounting

<Figure 1>

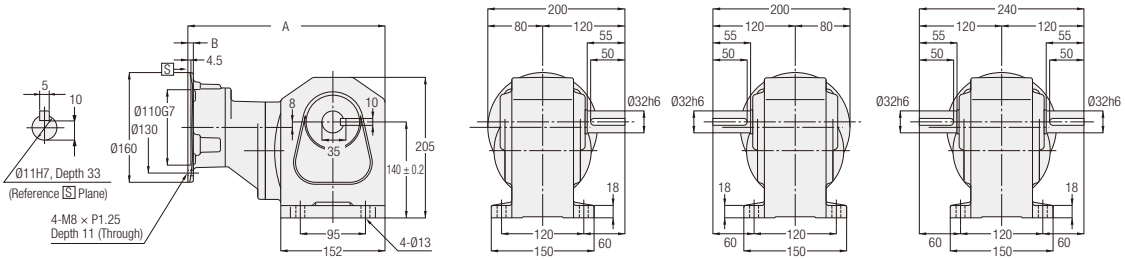

<Figure 2>

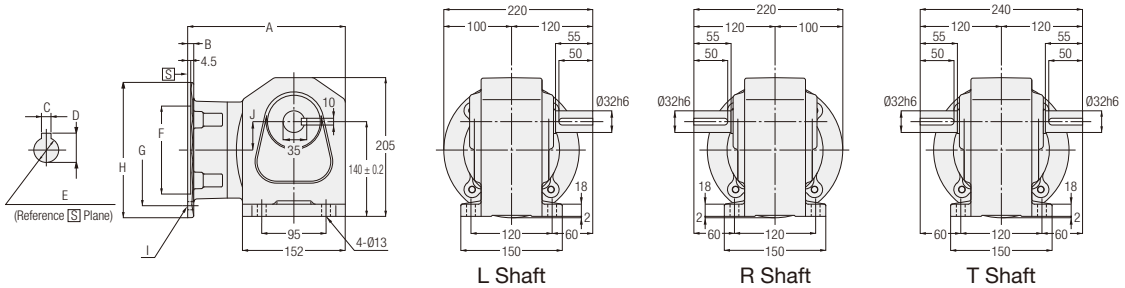

L Shaft R Shaft T Shaft

Power Class	Part Number	Reduction Ratio	Figure Number	Approx. Weight (kg)	A	B	C	D	E	F	G	H	I	J
0.2 kW	H2LS-32#-∗∗∗-020	300, 375, 450	1	10.5	287.5	8	-	-	-	-	-	-	-	-
0.4 kW	H2LS-32#-∗∗∗-040	80, 100, 120, 160, 200, 240	2	9.5	220	8	5	16	Ø14F7, Depth 36	Ø110G7	Ø130	Ø160	4-M8×P1.25, Depth 20	45
0.75 kW	H2LS-32#-∗∗∗-075	5, 10, 15, 20, 25, 30, 40, 50, 60	2	9	233	9	6	21.5	Ø19F7, Depth 42	Ø130G7	Ø165	Ø200	4-M10×P1.5, Depth 23 (Through)	42

Note: A shaft arrangement (L, R, T) will be indicated as # in the nomenclature. In addition, a reduction ratio will be indicated as ∗∗∗.
Note: Please refer to page 322 for the performance table.
Note: Please refer to page 629 for the details of the motor mounting area.

H2 Type Right Angle Shaft | Shaft Diameter 40 | **Foot** Mounting

<Figure 1>

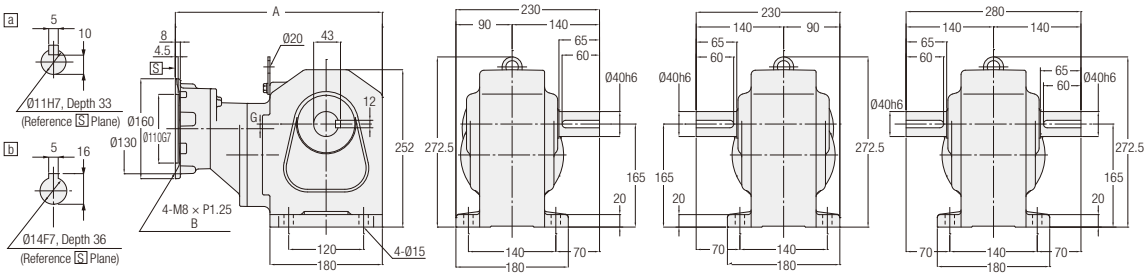

<Figure 2>

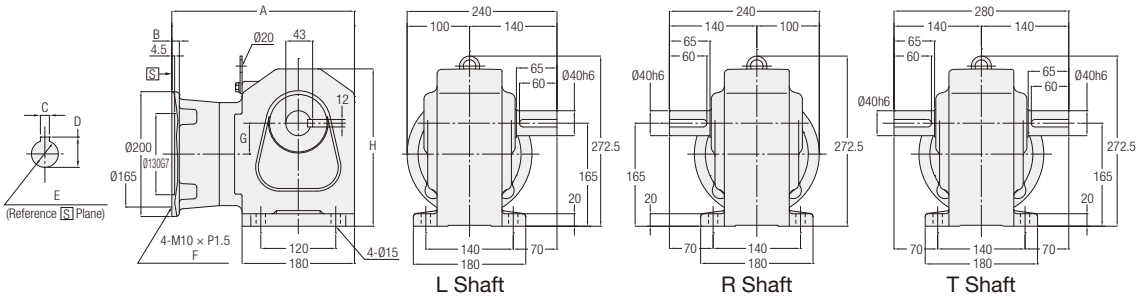

L Shaft R Shaft T Shaft

Power Class	Part Number	Reduction Ratio	Figure Number	Approx. Weight (kg)	Input Shaft	A	B	C	D	E	F	G	H
0.2 kW	H2LS-40#-∗∗∗-020	600, 750, 900, 1200, 1500	1	19	a	306	Depth 11 (Through)	-	-	-	-	19.5	-
0.4 kW	H2LS-40#-∗∗∗-040	300, 375, 450	1	20	b	331.5	Depth 20	-	-	-	-	7.5	-
0.75 kW	H2LS-40#-∗∗∗-075	80, 100, 120, 160, 200, 240	2	17.5	-	251.5	9	6	21.5	Ø19F7, Depth 42	Depth 23 (Through)	53.5	242.5
1.5 kW	H2LS-40#-∗∗∗-150	5, 10, 15, 20, 25, 30, 40, 50, 60	2	19.5	-	292.5	12	8	27	Ø24F7, Depth 52	25	49.5	252

Note: A shaft arrangement (L, R, T) will be indicated as # in the nomenclature. In addition, a reduction ratio will be indicated as ∗∗∗.
Note: Please refer to page 322 for the performance table.
Note: Please refer to page 629 for the details of the motor mounting area.

H2 Type Right Angle Shaft | Shaft Diameter 50 | Foot Mounting

<Figure 1>

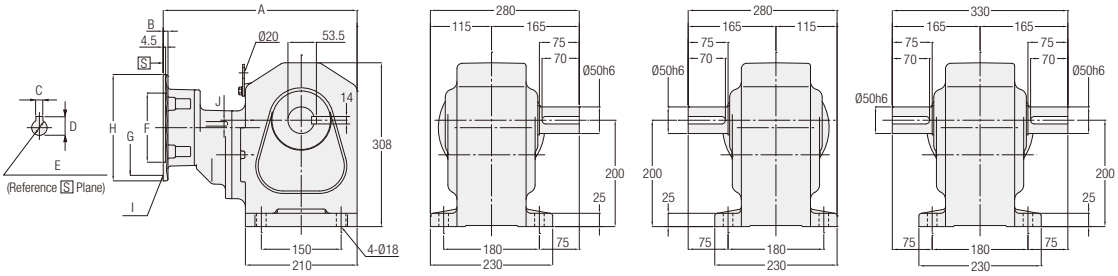

<Figure 2>

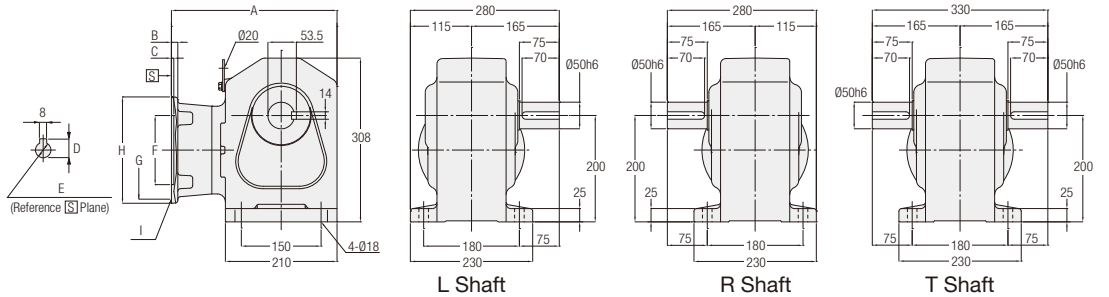

L Shaft R Shaft T Shaft

Power Class	Part Number	Reduction Ratio	Figure Number	Approx. Weight (kg)	A	B	C	D	E	F	G	H	I	J
0.4 kW	H2LS-50#-∗∗∗-040	600, 750, 900, 1200, 1500	1	49.5	350.5	8	5	16	Ø14F7, Depth 36	Ø110G7	Ø130	Ø160	4-M8×P1.25, Depth 20	23
0.75 kW	H2LS-50#-∗∗∗-075	300, 375, 450	1	50.5	364.5	9	6	21.5	Ø19F7, Depth 42	Ø130G7	Ø165	Ø200	4-M10×P1.5, Depth 23 (Through)	14
1.5 kW	H2LS-50#-∗∗∗-150	80, 100, 120, 160, 200, 240	2	49	311.5	12	4.5	27	Ø24F7, Depth 52	Ø130G7	Ø165	Ø200	4-M10×P1.5, Depth 25	-
2.2 kW	H2LS-50#-∗∗∗-220	5, 10, 15, 20, 25, 30, 40, 50, 60	2	49.5	324	16	5	31	Ø28F7, Depth 62	Ø180G7	Ø215	Ø250	4-M12×P1.75, Depth 16	-

Note: A shaft arrangement (L, R, T) will be indicated as # in the nomenclature. In addition, a reduction ratio will be indicated as ∗∗∗.
Note: Please refer to page 323 for the performance table.
Note: Please refer to page 629 for the details of the motor mounting area.

H2 Type Right Angle Shaft | Shaft Diameter **22** | **Flange** Mounting

<Figure 1>

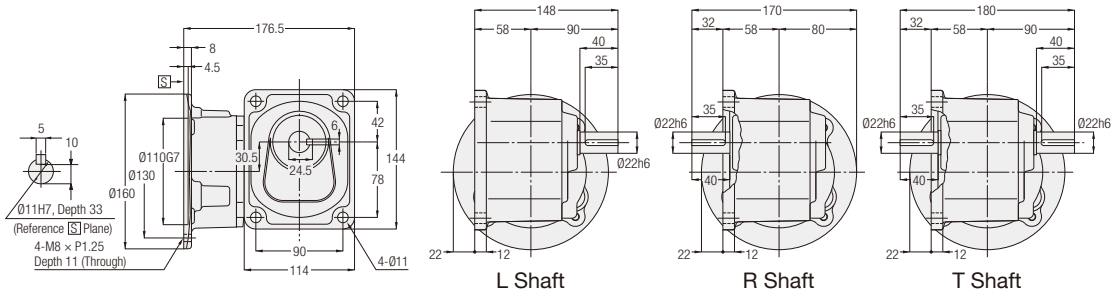

Power Class	Part Number	Reduction Ratio	Figure Number	Approx. Weight (kg)
0.2 kW	H2FS-22#-∗∗∗-020	5, 10, 15, 20, 25, 30, 40, 50, 60	1	4.5

Note: A shaft arrangement (L, R, T) will be indicated as # in the nomenclature. In addition, a reduction ratio will be indicated as ∗∗∗.
Note: Please refer to page 322 for the performance table.
Note: Please refer to page 629 for the details of the motor mounting area.

MEMO

F/FA Type

Right Angle Hollow Bore/ Right Angle Shaft

Standard Specification
Model and Type Codes
Standard Model Lineup

INDUCTION GEARMOTORS

P.360 1. Gearmotors/Gearmotors with Brake
1-1. Motor Characteristics Table
1-2. Performance Table
1-3. Drawings

P.390 2. IP65 Gearmotors/ IP65 Gearmotors with Brake
2-1. Motor Characteristics Table
2-2. Performance Table
2-3. Drawings

P.404 3. Gearboxes (Double Shaft Type)
3-1. Performance Table
3-2. Drawings

P.412 4. S-Type Gearboxes (Type Which Can Be Equipped with Designated Motor)
4-1. Performance Table
4-2. Drawings

Standard Specification

F Type Gearmotors/Gearmotors with Brake <Right Angle Hollow Bore/FS, Right Angle Shaft/FF>

Series		MID				
Motor Unit	Number of Phases	3-Phase				1-Phase (Note 4)
	Power	0.1 kW to 2.2 kW				0.1 kW to 0.4 kW
	Power Supply	Type	Global Standards Correspondence	Power Supply/Frequency		Standard Voltage 100 V/50 Hz, 100 V/60 Hz High Voltage (200 V Class) 200 V/50 Hz, 200 V/60 Hz
		Standard Voltage	UL/CE/CCC	200 V/50 Hz, 200 V/60 Hz, 220 V/60 Hz		
		High Voltage (400 V Class)	UL/CE/CCC	380 V/50 Hz, 400 V/50 Hz, 400 V/60 Hz, 440 V/60 Hz		
		Special Voltage	South Korea/ Taiwan UL/CE/CCC	220 V/60 Hz, 380 V/60 Hz (Dual Voltage)		
			China UL/CE/CCC	220 V/50 Hz, 230 V/50 Hz, 380 V/50 Hz (Dual Voltage)		
			China/South Korea/Taiwan UL/CE/CCC	220 V/50 Hz, 220 V/60 Hz, 380 V/50 Hz, 380 V/60 Hz (Dual Voltage) (Note 1)		
			Europe/North America UL/cUL/CE/CCC	415 V/50 Hz, 440 V/50 Hz, 480 V/60 Hz		
			North America/ Europe UL/cUL/CE/CCC	230 V/60 Hz, 460 V/60 Hz, 400 V/50 Hz (Dual Voltage) (Note 2)		
			North America/ Europe UL/cUL/CE/CCC	208 V/60 Hz, 230 V/60 Hz, 460 V/60 Hz, 400 V/50 Hz (Note 3)		
			Canada UL/cUL	575 V/60 Hz		
	Insulation Class	Ins. F				Ins. B
	Startup Method	Direct Power Input				Capacitor Start (0.1 kW: Capacitor Run)
	Cooling Method	Totally Enclosed Fan Cooled (TEFC) (IC411) (All of 0.1 kW and 0.2 kW models without brake are totally enclosed non-ventilated (TENV) (IC410))				Totally Enclosed Fan Cooled (TEFC) (IC411)
	Number of Motor Poles	4				
	Rating	Power	Motor Efficiency	UL/CE Standard	CCC Standard	Continuous
		0.1 kW	IE1	Continuous	Continuous	
		0.2 kW, 0.4 kW (Note 5)	IE2	Continuous	Short Time (120 minutes)	
		0.75 kW or above	IE3, GB3	Continuous	Continuous	
Gearbox	Reduction Type	Hypoid Gear and Helical Gear				
	Lubrication Type	Grease Lubrication (Maintenance-free)				
	Output Shaft	JIS Key (JIS B 1301-1996 plain form) * The key is included with the right angle shaft type.				
	Output Shaft Material	Carbon Steel				
	Case Material	Aluminum (Frame size 55 is cast iron)				
Ambient Conditions	Ambient Temperature	-10 °C to 40 °C (Note 6)				
	Ambient Humidity	85 % max (No Condensation)				
	Altitude	1,000 m max				
	Installation Environment	A well ventilated place free from corrosive gas, explosive gas, vapor and/or chemicals Not to be exposed to direct rain. Not to be exposed to direct sunlight. The brake should not to be exposed to water, dust, oil/grease, or oil mist. Models with water protection rating IPX0 shall not be exposed directly to water.				
Paint	Paint Color	Gray				
Protective Structure (Note 7)		IP44 or IP40				IP40 or IP44
Mounting Direction		No limitations in mounting angle				
Motor Characteristics Table		P.360 (FS Type), P.364 (FF Type)				P.361
Performance Table		P.365 (FS Type), P.373 (FF Type)				P.368
Drawings		P.375 (FS Type), P.387 (FF Type)				P.376

Note 1: Applicable motor power is 0.1 kW to 0.75 kW.
Note 2: Applicable motor power is 0.75 kW to 2.2 kW.
Note 3: Applicable motor power is 0.1 kW to 0.4 kW.
Note 4: Right angle shaft types are not available in Single-phase motors.
Note 5: For CCC Standard, Three-phase 0.2 kW and Three-phase 0.4 kW are certified under limited duty cycle. Please be cautious upon selecting this product.
Note 6: The ambient temperature for Single-phase motors with a power of 0.1 kW (capacitor run) is 0 °C to 40 °C.
Note 7: The protective structure differs depending on the model.

FA Type Gearmotors/Gearmotors with Brake <Right Angle Hollow Bore/FAS>

Series		MID				
Motor Unit	Number of Phases	3-Phase				1-Phase
	Power	0.4 kW to 2.2 kW				0.4 kW
	Power Supply	Type	Global Standards Correspondence	Power Supply/Frequency		Standard Voltage 100 V/50 Hz, 100 V/60 Hz High Voltage (200 V Class) 200 V/50 Hz, 200 V/60 Hz
		Standard Voltage	UL/CE/CCC	200 V/50 Hz, 200 V/60 Hz, 220 V/60 Hz		
		High Voltage (400 V Class)	UL/CE/CCC	380 V/50 Hz, 400 V/50 Hz, 400 V/60 Hz, 440 V/60 Hz		
		Special Voltage	South Korea/ Taiwan UL/CE/CCC	220 V/60 Hz, 380 V/60 Hz (Dual Voltage)		
			China UL/CE/CCC	220 V/50 Hz, 230 V/50 Hz, 380 V/50 Hz (Dual Voltage)		
			China/South Korea/Taiwan UL/CE/CCC	220 V/50 Hz, 220 V/60 Hz, 380 V/50 Hz, 380 V/60 Hz (Dual Voltage) (Note 1)		
			Europe/North America UL/cUL/CE/CCC	415 V/50 Hz, 440 V/50 Hz, 480 V/60 Hz		
			North America/ Europe UL/cUL/CE/CCC	230 V/60 Hz, 460 V/60 Hz, 400 V/50 Hz (Dual Voltage) (Note 2)		
			North America/ Europe UL/cUL/CE/CCC	208 V/60 Hz, 230 V/60 Hz, 460 V/60 Hz, 400 V/50 Hz (Note 3)		
			Canada UL/cUL	575 V/60 Hz		
	Insulation Class	Ins. F				Ins. B
	Startup Method	Direct Power Input				Capacitor Start
	Cooling Method	Totally Enclosed Fan Cooled (TEFC) (IC411)				Totally Enclosed Fan Cooled (TEFC) (IC411)
	Number of Motor Poles	4				
	Rating	Power	Motor Efficiency	UL/CE Standard	CCC Standard	Continuous
		0.4 kW (Note 4)	IE2	Continuous	Short Time (120 minutes)	
		0.75 kW or above	IE3, GB3	Continuous	Continuous	
Gearbox	Reduction Type	Hypoid Gear and Helical Gear				
	Lubrication Type	Grease Lubrication (Maintenance-free)				
	Output Shaft	JIS Key (JIS B 1301-1996 plain form) * The key is included with the right angle shaft type.				
	Output Shaft Material	Carbon Steel				
	Case Material	Aluminum				
Ambient Conditions	Ambient Temperature	-10 °C to 40 °C				
	Ambient Humidity	85 % max (No Condensation)				
	Altitude	1,000 m max				
	Installation Environment	A well ventilated place free from corrosive gas, explosive gas, vapor and/or chemicals Not to be exposed to direct rain. Not to be exposed to direct sunlight. The brake should not to be exposed to water, dust, oil/grease, or oil mist. Models with water protection rating IPX0 shall not be exposed directly to water.				
Paint	Paint Color	Gray				
Protective Structure (Note 5)		IP44 or IP40				IP40 or IP44
Mounting Direction		No limitations in mounting angle				
Motor Characteristics Table		P.362 (FAS Type)				P.363
Performance Table		P.370 (FAS Type)				P.372
Drawings		P.385 (FAS Type)				P.386

Note 1: Applicable motor power is 0.4 kW to 0.75 kW.
Note 2: Applicable motor power is 0.75 kW to 2.2 kW.
Note 3: Applicable motor power is 0.4 kW.
Note 4: For the CCC Standard, 3-phase 0.4 kW is certified with a short time rating specification. Be careful upon use.
Note 5: The protective structure differs depending on the model.

F Type IP65 Gearmotors/IP65 Gearmotors with Brake <Right Angle Hollow Bore/FS>

Series		MID			
Motor Unit	Number of Phases	3-Phase			
	Power	0.1 kW to 2.2 kW			
	Power Supply	Type	Global Standards Correspondence	Power Supply/Frequency	
		Standard Voltage	UL/CE/CCC	200 V/50 Hz, 200 V/60 Hz, 220 V/60 Hz	
		High Voltage (400 V Class)	UL/CE/CCC	380 V/50 Hz, 400 V/50 Hz, 400 V/60 Hz, 440 V/60 Hz	
		Special Voltage	South Korea/Taiwan UL/CE/CCC	220 V/60 Hz, 380 V/60 Hz (Dual Voltage)	
			China UL/CE/CCC	220 V/50 Hz, 230 V/50 Hz, 380 V/50 Hz (Dual Voltage)	
			China/South Korea/Taiwan UL/CE/CCC	220 V/50 Hz, 220 V/60 Hz, 380 V/50 Hz, 380 V/60 Hz (Dual Voltage) (Note 1)	
			Europe/North America UL/cUL/CE/CCC	415 V/50 Hz, 440 V/50 Hz, 480 V/60 Hz	
			North America/Europe UL/cUL/CE/CCC	230 V/60 Hz, 460 V/60 Hz, 400 V/50 Hz (Dual Voltage) (Note 2)	
			North America/Europe UL/cUL/CE/CCC	208 V/60 Hz, 230 V/60 Hz, 460 V/60 Hz, 400 V/50 Hz (Note 3)	
			Canada UL/cUL	575 V/60 Hz	
	Insulation Class	Ins. F			
	Startup Method	Direct Power Input			
	Cooling Method	Totally Enclosed Fan Cooled (TEFC) (IC411) (All of 0.1 kW and 0.2 kW models without brake are totally enclosed non-ventilated (TENV) (IC410))			
	Number of Motor Poles	4			
	Rating	Power	Motor Efficiency	UL/CE Standard	CCC Standard
		0.1 kW	IE1	Continuous	Continuous
		0.2 kW, 0.4 kW (Note 4)	IE2	Continuous	Short Time (120 minutes)
		0.75 kW or above	IE3, GB3	Continuous	Continuous
Gearbox	Reduction Type	Hypoid Gear and Helical Gear			
	Lubrication Type	Grease Lubrication (Maintenance-free)			
	Output Shaft	JIS Key (JIS B 1301-1996 plain form)			
	Output Shaft Material	Stainless Steel or Carbon Steel			
	Case Material	Aluminum (Frame size 55 is cast iron)			
Ambient Conditions	Ambient Temperature	-10 °C to 40 °C			
	Ambient Humidity	100 % max (No Condensation)			
	Altitude	1,000 m max			
	Installation Environment	A place free from corrosive gas, explosive gas, and/or vapor Not to be exposed to strong rain and wind. Not to be exposed to direct sunlight. Not to be used underwater, environments with exposure to high pressure water splashes, and exposure to cleansing chemicals			
Paint	Paint Color	Gray			
Protective Structure		IP65			
Mounting Direction		No limitations in mounting angle			
Motor Characteristics Table		P.390			
Performance Table		P.392			
Drawings		P.397			

Note 1: Applicable motor power is 0.1 kW to 0.75 kW.
Note 2: Applicable motor power is 0.75 kW to 2.2 kW.
Note 3: Applicable motor power is 0.1 kW to 0.4 kW.
Note 4: For CCC Standard, Three-phase 0.2 kW and Three-phase 0.4 kW are certified under limited duty cycle. Please be cautious upon selecting this product.

FA Type IP65 Gearmotors/IP65 Gearmotors with Brake <Right Angle Hollow Bore/FAS>

Series		MID			
Motor Unit	Number of Phases	3-Phase			
	Power	0.4 kW to 2.2 kW			
	Power Supply	Type	Global Standards Correspondence	Power Supply/Frequency	
		Standard Voltage	UL/CE/CCC	200 V/50 Hz, 200 V/60 Hz, 220 V/60 Hz	
		High Voltage (400 V Class)	UL/CE/CCC	380 V/50 Hz, 400 V/50 Hz, 400 V/60 Hz, 440 V/60 Hz	
		Special Voltage	South Korea/Taiwan UL/CE/CCC	220 V/60 Hz, 380 V/60 Hz (Dual Voltage)	
			China UL/CE/CCC	220 V/50 Hz, 230 V/50 Hz, 380 V/50 Hz (Dual Voltage)	
			China/South Korea/Taiwan UL/CE/CCC	220 V/50 Hz, 220 V/60 Hz, 380 V/50 Hz, 380 V/60 Hz (Dual Voltage) (Note 1)	
			Europe/North America UL/cUL/CE/CCC	415 V/50 Hz, 440 V/50 Hz, 480 V/60 Hz	
			North America/Europe UL/cUL/CE/CCC	230 V/60 Hz, 460 V/60 Hz, 400 V/50 Hz (Dual Voltage) (Note 2)	
			North America/Europe UL/cUL/CE/CCC	208 V/60 Hz, 230 V/60 Hz, 460 V/60 Hz, 400 V/50 Hz (Note 3)	
			Canada UL/cUL	575 V/60 Hz	
	Insulation Class	Ins. F			
	Startup Method	Direct Power Input			
	Cooling Method	Totally Enclosed Fan Cooled (TEFC) (IC411)			
	Number of Motor Poles	4			
	Rating	Power	Motor Efficiency	UL/CE Standard	CCC Standard
		0.4 kW (Note 4)	IE2	Continuous	Short Time (120 minutes)
		0.75 kW or above	IE3, GB3	Continuous	Continuous
Gearbox	Reduction Type	Hypoid Gear and Helical Gear			
	Lubrication Type	Grease Lubrication (Maintenance-free)			
	Output Shaft	JIS Key (JIS B 1301-1996 plain form)			
	Output Shaft Material	Stainless Steel or Carbon Steel			
	Case Material	Aluminum			
Ambient Conditions	Ambient Temperature	-10 °C to 40 °C			
	Ambient Humidity	100 % max (No Condensation)			
	Altitude	1,000 m max			
	Installation Environment	A place free from corrosive gas, explosive gas, and/or vapor Not to be exposed to strong rain and wind. Not to be exposed to direct sunlight. Not to be used underwater, environments with exposure to high pressure water splashes, and exposure to cleansing chemicals			
Paint	Paint Color	Gray			
Protective Structure		IP65			
Mounting Direction		No limitations in mounting angle			
Motor Characteristics Table		P.391			
Performance Table		P.395			
Drawings		P.402			

Note 1: Applicable motor power is 0.4 kW to 0.75 kW.
Note 2: Applicable motor power is 0.75 kW to 2.2 kW.
Note 3: Applicable motor power is 0.4 kW.
Note 4: For CCC Standard, Three-phase 0.4 kW are certified under limited duty cycle. Please be cautious upon selecting this product.

F Type Gearboxes (Double Shaft Type) <Right Angle Hollow Bore/FS>

Series		MID
4 poles Motor Power Class		0.1 kW Class to 2.2 kW Class
Gearbox	Reduction Type	Hypoid Gear and Helical Gear
	Lubrication Type	Grease Lubrication (Maintenance-free)
	Output Shaft	JIS Key (JIS B 1301-1996 plain form) * The key is not included with the motor.
	Input Shaft	JIS Key (JIS B 1301-1996 plain form) * The key is not included with the motor.
	Output Shaft Material	Carbon Steel
	Input Shaft Material	Carbon Steel
	Case Material	Aluminum (Frame size 55 is cast iron)
Ambient Conditions	Ambient Temperature	-10 °C to 40 °C
	Ambient Humidity	85 % max (No Condensation)
	Altitude	1,000 m max
	Installation Environment	A place free from corrosive gas, explosive gas, and/or vapor. Well ventilated place with no dust.
	Installation Place	Indoors
Paint	Paint Color	Gray
Mounting Direction		No limitations in mounting angle
Performance Table		P.404
Drawings		P.407

FA Type Gearboxes (Double Shaft Type) <Right Angle Hollow Bore/FAS>

Series		MID
4 poles Motor Power Class		1.5 kW Class to 2.2 kW Class
Gearbox	Reduction Type	Hypoid Gear and Helical Gear
	Lubrication Type	Grease Lubrication (Maintenance-free)
	Output Shaft	JIS Key (JIS B 1301-1996 plain form) * The key is not included with the motor.
	Input Shaft	JIS Key (JIS B 1301-1996 plain form) * The key is not included with the motor.
	Output Shaft Material	Carbon Steel
	Input Shaft Material	Carbon Steel
	Case Material	Aluminum
Ambient Conditions	Ambient Temperature	-10 °C to 40 °C
	Ambient Humidity	85 % max (No Condensation)
	Altitude	1,000 m max
	Installation Environment	A place free from corrosive gas, explosive gas, and/or vapor. Well ventilated place with no dust.
	Installation Place	Indoors
Paint	Paint Color	Gray
Mounting Direction		No limitations in mounting angle
Performance Table		P.406
Drawings		P.410

F Type S-Type Gearboxes <Right Angle Hollow Bore/FS>

Series		MID
4 poles Motor Power Class		0.1 kW Class to 2.2 kW Class
Gearbox	Reduction Type	Hypoid Gear and Helical Gear
	Lubrication Type	Grease Lubrication (Maintenance-free)
	Output Shaft	JIS Key (JIS B 1301-1996 plain form) * The key is not included with the motor.
	Output Shaft Material	Carbon Steel
	Case Material	Aluminum (Frame size 55 is cast iron)
Ambient Conditions	Ambient Temperature	-10 °C to 40 °C
	Ambient Humidity	85 % max (No Condensation)
	Altitude	1,000 m max
	Installation Environment	A place free from corrosive gas, explosive gas, and/or vapor. Well ventilated place with no dust.
	Installation Place	Indoors
Paint	Paint Color	Gray
Mounting Direction		No limitations in mounting angle
Performance Table		P.412
Drawings		P.415

FA Type S-Type Gearboxes <Right Angle Hollow Bore/FAS>

Series		MID
4 poles Motor Power Class		1.5 kW Class to 2.2 kW Class
Gearbox	Reduction Type	Hypoid Gear and Helical Gear
	Lubrication Type	Grease Lubrication (Maintenance-free)
	Output Shaft	JIS Key (JIS B 1301-1996 plain form) * The key is not included with the motor.
	Output Shaft Material	Carbon Steel
	Case Material	Aluminum
Ambient Conditions	Ambient Temperature	-10 °C to 40 °C
	Ambient Humidity	85 % max (No Condensation)
	Altitude	1,000 m max
	Installation Environment	A place free from corrosive gas, explosive gas, and/or vapor. Well ventilated place with no dust.
	Installation Place	Indoors
Paint	Paint Color	Gray
Mounting Direction		No limitations in mounting angle
Performance Table		P.414
Drawings		P.418

Model and Type Codes

F Type Gearmotors/Gearmotors with Brake MID Series <Right Angle Hollow Bore/ FS, Right Angle Shaft/FF> [3-Phase]

Gearhead Type					Motor Type							Brake Specifications	Option	
Mounting Type	Frame Size	Shaft Arrangement	Reduction Ratio		Motor Type	Motor Specifications	Motor Power	Number of Phases	Supply Voltage	Standards	Terminal Box	Brake	Option	Option Code
FF	22	R	10	–	M	M	01	T	N	N	T	N		
FS	45	N	60	–	M	R	08	T	W	N	T	B4	X	AA
FS	55	N	100	–	M	R	15	T	K	N	T	B2	X	T9HZ
①	②	③	④		⑤	⑥	⑦	⑧	⑨	⑩	⑪	⑫	⑬	⑭

①Mounting Type	FS : Right Angle Hollow Bore (Frame size 55 is cast tiron only)			
	FF : Right Angle Shaft			
②Frame Size and Output Shaft Diameter	Output Shaft Diameter (Internal Diameter)			
③Shaft Arrangement	Material	Shaft Arrangement		
		Right Angle Hollow Bore	Solid Shaft	
	Carbon Steel	N	Viewing from the input Shaft(↑), the Output shaft would be on the left side ↑	Viewing from the input Shaft(↑), the Output shaft would be on the right side ↑	Viewing from the input Shaft(↑), the Output shaft would be on the both sides ↑
			L	R	T
④Reduction Ratio	5: 1/5 to 15X: 1/1500 (7.5 = 7, 12.5 = 12)			
⑤Motor Type	M : Standard Induction Motor (IP40 or IP44)			
⑥Motor Specifications (Note 1)	M : IE1 Efficiency Ins. F (0.1 kW) : IE2 Efficiency Ins. F (0.2 kW to 0.4 kW)			
	R : IE3 Efficiency Ins. F (0.75 kW to 2.2 kW)			
⑦Motor Power	01 : 0.1 kW			
	02 : 0.2 kW			
	04 : 0.4 kW			
	08 : 0.75 kW			
	15 : 1.5 kW			
	22 : 2.2 kW			
⑧Number of Phases	T : 3-Phase			

⑨Supply Voltage (Note 2)		⑫Brake Specifications (Note 3)				
		N	B2	B4	J2	J4
N	: 200 V/50 Hz, 200 V/60 Hz, 220 V/60 Hz	○	○		○	
W	: 380 V/50 Hz, 400 V/50 Hz, 400 V/60 Hz, 440 V/60 Hz	○		○		○
K	: 220 V/60 Hz, 380 V/60 Hz	○	○	○	○	○
C	: 220 V/50 Hz, 230 V/50 Hz, 380 V/50 Hz	○	○	○	○	○
D	: 220 V/50 Hz, 220 V/60 Hz, 380 V/50 Hz, 380 V/60 Hz	○	○	○	○	○
E	: 415 V/50 Hz, 440 V/50 Hz, 480 V/60 Hz	○		○		○
U	: 230 V/60 Hz, 460 V/60 Hz, 400 V/50 Hz	○	○	○	○	○
A	: 208 V/60 Hz, 230 V/60 Hz, 460 V/60 Hz, 400 V/50 Hz	○	○	○	○	○
M	: 575 V/60 Hz	○	○		○	

⑩Standards	N : CE/UL/CCC
	A : UL * Supply Voltage : M (575 V/60 Hz) only
⑪Terminal Box (Note 4)	T : T Type Terminal Box (Steel Plate)
	N : Flying Leads
⑫Brake Specifications (Note 5)	N : No Brake
	B2 : 200 V Brake
	B4 : 400 V Brake
	J2 : 200 V Brake Motor with Manual Brake Release Lever (Optional)
	J4 : 400 V Brake Motor with Manual Brake Release Lever (Optional)
⑬Option	Blank : Standard Specification
	X : Special Specification Code
⑭Option Code (Note 6)	Built-in Rectifier Connection Code Please refer to the list of option codes on page 561 for details.
	Terminal Box Position Code Please refer to the list of option codes on page 583 for details.
	For other option codes, please refer to the list of option codes on page 1012.

Note 1: For CCC Standard, 0.2 kW and 0.4 kW are certified under limited duty cycle. Please be cautious upon selecting the product.
Note 2: Refer to the following for the corresponding motor powers for supply voltages.
Supply voltage D: 0.1 kW to 0.75 kW Supply voltage U: 0.75 kW to 2.2 kW Supply voltage A: 0.1 kW to 0.4 kW
Dual voltage is not available for gearmotors with brake and supply the voltage code “K”, “C”, “D”, “U” and “A”.
The motor voltage is limited by the brake specifications.
Note 3: ○ indicates a brake specification that can be manufactured.
Note 4: With regard to the types of flying leads, only supply voltage codes N and W are covered.
Note 5: The rectifier is included with the product.
Note 6: The option code will not be shown in the nomenclature on the nameplate. But it will be shown in the Option code row of the nameplate.

F Type Gearmotors/Gearmotors with Brake MID Series <Right Angle Hollow Bore/ FS> [1-Phase]

Gearhead Type					Motor Type							Brake Specifications	Option	
Mounting Type	Frame Size	Shaft Arrangement	Reduction Ratio		Motor Type	Motor Specifications	Motor Power	Number of Phases	Supply Voltage	Standards	Terminal Box	Brake	Option	Option Code
FS	25	N	50	–	M	M	01	S	N	J	A	N		
FS	32	N	450	–	M	M	02	C	W	J	A	B2		
FS	45	N	375	–	M	M	04	C	N	J	A	B2	X	T9HZ
①	②	③	④		⑤	⑥	⑦	⑧	⑨	⑩	⑪	⑫	⑬	⑭

①Mounting Type (Note 1)	FS : Right Angle Hollow Bore (Frame size 55 is cast iron only)
②Frame Size and Output Shaft Diameter	Output Shaft Diameter (Internal Diameter)
③Shaft Arrangement	N : Right Angle Hollow Bore
④Reduction Ratio	5: 1/5 to 15X: 1/1500 (7.5 = 7, 12.5 = 12)
⑤Motor Type	M : Standard Induction Motor (IP44 or IP40)
⑥Motor Specifications	M : IE1 Efficiency Ins. B
⑦Motor Power	01 : 0.1 kW
	02 : 0.2 kW
	04 : 0.4 kW
⑧Number of Phases	S : 1-Phase Capacitor Run (Note 2)
	C : 1-Phase Capacitor Start
⑨Supply Voltage (Note 3)	N : 100 V/50 Hz, 100 V/60 Hz
	W : 200 V/50 Hz, 200 V/60 Hz
⑩Standards	J : No Standards
⑪Terminal Box	A : A Type Terminal Box (Aluminum)
⑫Brake Specifications	N : No Brake
	B2 : 200 V Brake
⑬Option	Blank : Standard Specification
	X : Special Specification Code
⑭Option Code (Note 4)	Terminal Box Position Code Please refer to page 585 for details.

Note 1: Right angle shaft types are not available.
Note 2: 1-phase capacitor run type motors have built-in thermal protectors.
Refer to page 643 for the cautions for use.
Note 3: For voltages/frequencies not listed above, please contact your nearest Sales Office or the CS Center.
Note 4: The option code will not be shown in the nomenclature on the nameplate. But it will be shown in the Option code row of the nameplate.

FA Type Gearmotors/Gearmotors with Brake MID Series <Right Angle Hollow Bore/ FAS> [3-Phase]

Gearhead Type					Motor Type							Brake Specifications	Option	
Mounting Type	Frame Size	Shaft Arrangement	Reduction Ratio		Motor Type	Motor Specifications	Motor Power	Number of Phases	Supply Voltage	Standards	Terminal Box	Brake	Option	Option Code
FAS	55	N	600	–	M	M	04	T	N	N	T	B2	X	AA
FAS	55	N	10	–	M	R	22	T	N	N	T	N		
①	②	③	④		⑤	⑥	⑦	⑧	⑨	⑩	⑪	⑫	⑬	⑭

①Mounting Type	FAS : Right Angle Hollow Bore (55-frame only)	
②Frame Size and Output Shaft Diameter	Output Shaft Diameter (Internal Diameter)	
③Shaft Arrangement	Material	Shaft Arrangement
		Right Angle Hollow Bore
	Carbon Steel	N
④Reduction Ratio	5: 1/5 to 15X: 1/1500 (7.5 = 7, 12.5 = 12)	
⑤Motor Type	M : Standard Induction Motor (IP40 or IP44)	
⑥Motor Specifications (Note 1)	M : IE2 Efficiency Ins. F (0.4 kW)	
	R : IE3 Efficiency Ins. F (0.75 kW to 2.2 kW)	
⑦Motor Power	04 : 0.4 kW	
	08 : 0.75 kW	
	15 : 1.5 kW	
	22 : 2.2 kW	
⑧Number of Phases	T : 3-Phase	

⑨Supply Voltage (Note 2)		⑫Brake Specifications (Note 3)				
		N	B2	B4	J2	J4
N	: 200 V/50 Hz, 200 V/60 Hz, 220 V/60 Hz	○	○		○	
W	: 380 V/50 Hz, 400 V/50 Hz, 400 V/60 Hz, 440 V/60 Hz	○		○		○
K	: 220 V/60 Hz, 380 V/60 Hz	○	○	○	○	○
C	: 220 V/50 Hz, 230 V/50 Hz, 380 V/50 Hz	○	○	○	○	○
D	: 220 V/50 Hz, 220 V/60 Hz, 380 V/50 Hz, 380 V/60 Hz	○	○	○	○	○
E	: 415 V/50 Hz, 440 V/50 Hz, 480 V/60 Hz	○		○		○
U	: 230 V/60 Hz, 460 V/60 Hz, 400 V/50 Hz	○	○	○	○	○
A	: 208 V/60 Hz, 230 V/60 Hz, 460 V/60 Hz, 400 V/50 Hz	○	○	○	○	○
M	: 575 V/60 Hz	○	○		○	

⑨Supply Voltage	
⑩Standards	N : CE/UL/CCC
	A : UL * Supply Voltage : M (575 V/60 Hz) only
⑪Terminal Box (Note 4)	T : T Type Terminal Box (Steel Plate)
	N : Flying Leads
⑫Brake Specifications (Note 5)	N : No Brake
	B2 : 200 V Brake
	B4 : 400 V Brake
	J2 : 200 V Brake Motor with Manual Brake Release Lever (Optional)
	J4 : 400 V Brake Motor with Manual Brake Release Lever (Optional)
⑬Option	Blank : Standard Specification
	X : Special Specification Code
⑭Option Code (Note 6)	Built-in Rectifier Connection Code Please refer to the list of option codes on page 561 for details.
	Terminal Box Position Code Please refer to the list of option codes on page 583 for details.
	For other option codes, please refer to the list of option codes on page 1012.

Note 1: For the CCC Standard, 0.4 kW is certified with a short time rating specification. Be careful upon use.
Note 2: Refer to the following for the corresponding motor powers for supply voltages.
Supply voltage D: 0.4 kW to 0.75 kW Supply voltage U: 0.75 kW to 2.2 kW Supply voltage A: 0.4 kW
Dual voltage is not available for gearmotors with brake and supply the voltage code “K”, “C”, “D”, “U” and “A”.
The motor voltage is limited by the brake specifications.
Note 3: ○ indicates a brake specification that can be manufactured.
Note 4: With regard to the types of flying leads, only supply voltage codes N and W are covered.
Note 5: The rectifier is included with the product.
Note 6: The option code will not be shown in the nomenclature on the nameplate. But it will be shown in the Option code row of the nameplate.
Note 7: Right angle shaft types are not available.

FA Type Gearmotors/Gearmotors with Brake MID Series <Right Angle Hollow Bore/ FAS> [1-Phase]

Gearhead Type					Motor Type							Brake Specifications	Option	
Mounting Type	Frame Size	Shaft Arrangement	Reduction Ratio		Motor Type	Motor Specifications	Motor Power	Number of Phases	Supply Voltage	Standards	Terminal Box	Brake	Option	Option Code
FAS	55	N	600	–	M	M	04	C	N	J	A	N		
①	②	③	④		⑤	⑥	⑦	⑧	⑨	⑩	⑪	⑫	⑬	⑭

①Mounting Type (Note 1)	FAS : Right Angle Hollow Bore (55-frame only)
②Frame Size and Output Shaft Diameter	Output Shaft Diameter (Internal Diameter)
③Shaft Arrangement	N : Right Angle Hollow Bore
④Reduction Ratio	5: 1/5 to 15X: 1/1500 (7.5 = 7, 12.5 = 12)
⑤Motor Type	M : Standard Induction Motor (IP44 or IP40)
⑥Motor Specifications	M : IE1 Efficiency Ins. B
⑦Motor Power	04 : 0.4 kW
⑧Number of Phases	C : 1-Phase Capacitor Start
⑨Supply Voltage (Note 2)	N : 100 V/50 Hz, 100 V/60 Hz
	W : 200 V/50 Hz, 200 V/60 Hz
⑩Standards	J : No Standards
⑪Terminal Box	A : A Type Terminal Box (Aluminum)
⑫Brake Specifications	N : No Brake
	B2 : 200 V Brake
⑬Option	Blank : Standard Specification
	X : Special Specification Code
⑭Option Code (Note 3)	Terminal Box Position Code Please refer to page 585 for details.

Note 1: Right angle shaft types are not available.
Note 2: For voltages/frequencies not listed above, please contact your nearest Sales Office or the CS Center.
Note 3: The option code will not be shown in the nomenclature on the nameplate. But it will be shown in the Option code row of the nameplate.

F Type IP65 Gearmotors/IP65 Gearmotors with Brake MID Series <Right Angle Hollow Bore/ FS> [3-Phase]

Gearhead Type					Motor Type							Brake Specifications	Option	
Mounting Type	Frame Size	Shaft Arrangement	Reduction Ratio		Motor Type	Motor Specifications	Motor Power	Number of Phases	Supply Voltage	Standards	Terminal Box	Brake	Option	Option Code
FS	25	S	10	–	W	M	01	T	N	N	E	N		
FS	45	N	60	–	W	R	08	T	W	N	E	V4	X	AA
FS	55	S	100	–	W	R	15	T	K	N	E	N		
①	②	③	④		⑤	⑥	⑦	⑧	⑨	⑩	⑪	⑫	⑬	⑭

①Mounting Type (Note 1)	FS : Right Angle Hollow Bore (Frame size 55 is cast iron only)			
②Frame Size and Output Shaft Diameter	Output Shaft Diameter (Internal Diameter)			
③Shaft Arrangement and Material	Material	Shaft Arrangement Right Angle Hollow Bore		
	Carbon Steel	N		
	Stainless Steel	S		
④Reduction Ratio	5: 1/5 to 15X: 1/1500 (7.5 = 7, 12.5 = 12)			
⑤Motor Type	W : IP65 Induction Motor			
⑥Motor Specifications (Note 2)	M : IE1 Efficiency Ins. F (0.1 kW) : IE2 Efficiency Ins. F (0.2 kW to 0.4 kW)			
	R : IE3 Efficiency Ins. F (0.75 kW to 2.2 kW)			
⑦Motor Power	01 : 0.1 kW			
	02 : 0.2 kW			
	04 : 0.4 kW			
	08 : 0.75 kW			
	15 : 1.5 kW			
	22 : 2.2 kW			
⑧Number of Phases (Note 3)	T : 3-Phase			
⑨Supply Voltage	⑨Supply Voltage (Note 4)	⑫Brake Specifications (Note 5)		
		N	V2	V4
	N : 200 V/50 Hz, 200 V/60 Hz, 220 V/60 Hz	○	○	
	W : 380 V/50 Hz, 400 V/50 Hz, 400 V/60 Hz, 440 V/60 Hz	○		○
	K : 220 V/60 Hz, 380 V/60 Hz	○	○	○
	C : 220 V/50 Hz, 230 V/50 Hz, 380 V/50 Hz	○	○	○
	D : 220 V/50 Hz, 220 V/60 Hz, 380 V/50 Hz, 380 V/60 Hz	○	○	○
	E : 415 V/50 Hz, 440 V/50 Hz, 480 V/60 Hz	○		○
	U : 230 V/60 Hz, 460 V/60 Hz, 400 V/50 Hz	○	○	○
	A : 208 V/60 Hz, 230 V/60 Hz, 460 V/60 Hz, 400 V/50 Hz	○	○	○
	M : 575 V/60 Hz	○	○	
⑩Standards	N : CE/UL/CCC			
	A : UL * Supply Voltage : M (575 V/60 Hz) only			
⑪Terminal Box	E : E Type Terminal Box (Aluminum)			
⑫Brake Specifications	N : No Brake			
	V2 : IP65 200 V Class Brake (Note 6)			
	V4 : IP65 400 V Class Brake (Note 6)			
⑬Option	Blank : Standard Specification			
	X : Special Specification Code			
⑭Option Code (Note 7)	Built-in Rectifier Connection Code Please refer to the list of option codes on page 561 for details.			
	Terminal Box Position Code Please refer to the list of option codes on page 583 for details.			
	For other option codes, please refer to the list of option codes on page 1012.			

Note 1: Right angle shaft types are not available.
Note 2: For CCC Standard, 0.2 kW and 0.4 kW are certified under limited duty cycle. Please be cautious upon selecting the product.
Note 3: Single-phase types are not available.
Note 4: Refer to the following for the corresponding motor powers for supply voltages.
Supply voltage D: 0.1 kW to 0.75 kW Supply voltage U: 0.75 kW to 2.2 kW Supply voltage A: 0.1 kW to 0.4 kW
Dual voltage is not available for gearmotors with brake and supply the voltage code “K”, “C”, “D”, “U” and “A”.
The motor voltage is limited by the brake specifications.
Note 5: ○ indicates a brake specification that can be manufactured.
Note 6: IP65 gearmotors with a brake are not available with motor powers of 1.5 kW and 2.2 kW.
Note 7: The option code will not be shown in the nomenclature on the nameplate. But it will be shown in the Option code row of the nameplate.

Model and Type Codes

FA Type IP65 Gearmotors/IP65 Gearmotors with Brake MID Series <Right Angle Hollow Bore/ FAS> [3-Phase]

Gearhead Type					Motor Type							Brake Specifications	Option	
Mounting Type	Frame Size	Shaft Arrangement	Reduction Ratio		Motor Type	Motor Specifications	Motor Power	Number of Phases	Supply Voltage	Standards	Terminal Box	Brake	Option	Option Code
FAS	55	N	600	–	W	M	04	T	N	N	E	V2	X	AA
FAS	55	N	10	–	W	R	22	T	N	N	E	N		
①	②	③	④		⑤	⑥	⑦	⑧	⑨	⑩	⑪	⑫	⑬	⑭

①Mounting Type (Note 1)	FAS : Right Angle Hollow Bore (55-frame only)	
②Frame Size and Output Shaft Diameter	Output Shaft Diameter (Internal Diameter)	
③Shaft Arrangement and Material	Material	Shaft Arrangement Right Angle Hollow Bore
	Carbon Steel	N
	Stainless Steel	S
④Reduction Ratio	5: 1/5 to 15X: 1/1500 (7.5 = 7, 12.5 = 12)	
⑤Motor Type	W : IP65 Induction Motor	
⑥Motor Specifications (Note 2)	M : IE2 Efficiency Ins. F (0.4 kW)	
	R : IE3 Efficiency Ins. F (0.75 kW to 2.2 kW)	
⑦Motor Power	04 : 0.4 kW	
	08 : 0.75 kW	
	15 : 1.5 kW	
	22 : 2.2 kW	
⑧Number of Phases (Note 3)	T : 3-Phase	

⑨Supply Voltage	⑨Supply Voltage (Note 4)	⑫Brake Specifications (Note 5)		
		N	V2	V4
	N : 200 V/50 Hz, 200 V/60 Hz, 220 V/60 Hz	○	○	
	W : 380 V/50 Hz, 400 V/50 Hz, 400 V/60 Hz, 440 V/60 Hz	○		○
	K : 220 V/60 Hz, 380 V/60 Hz	○	○	○
	C : 220 V/50 Hz, 230 V/50 Hz, 380 V/50 Hz	○	○	○
	D : 220 V/50 Hz, 220 V/60 Hz, 380 V/50 Hz, 380 V/60 Hz	○	○	○
	E : 415 V/50 Hz, 440 V/50 Hz, 480 V/60 Hz	○		○
	U : 230 V/60 Hz, 460 V/60 Hz, 400 V/50 Hz	○	○	○
	A : 208 V/60 Hz, 230 V/60 Hz, 460 V/60 Hz, 400 V/50 Hz	○	○	○
	M : 575 V/60 Hz	○	○	

⑩Standards	N : CE/UL/CCC	
	A : UL * Supply Voltage : M (575 V/60 Hz) only	
⑪Terminal Box	E : E Type Terminal Box (Aluminum)	
⑫Brake Specifications	N : No Brake	
	V2 : IP65 200 V Class Brake (Note 6)	
	V4 : IP65 400 V Class Brake (Note 6)	
⑬Option	Blank : Standard Specification	
	X : Special Specification Code	
⑭Option Code (Note 7)	Built-in Rectifier Connection Code Please refer to the list of option codes on page 561 for details.	
	Terminal Box Position Code Please refer to the list of option codes on page 583 for details.	
	For other option codes, please refer to the list of option codes on page 1012.	

Note 1: Right angle shaft types are not available.
Note 2: For CCC Standard, 0.4 kW are certified under limited duty cycle. Please be cautious upon selecting the product.
Note 3: Single-phase types are not available.
Note 4: Refer to the following for the corresponding motor powers for supply voltages.
Supply voltage D: 0.4 kW to 0.75 kW Supply voltage U: 0.75 kW to 2.2 kW Supply voltage A: 0.4 kW
Dual voltage is not available for gearmotors with brake and supply the voltage code “K”, “C”, “D”, “U” and “A”.
The motor voltage is limited by the brake specifications.
Note 5: ○ indicates a brake specification that can be manufactured.
Note 6: IP65 gearmotors with a brake are not available with motor powers of 1.5 kW and 2.2 kW.
Note 7: The option code will not be shown in the nomenclature on the nameplate. But it will be shown in the Option code row of the nameplate.

F Type Gearboxes (Double Shaft Type) MID Series <Right Angle Hollow Bore/FS>

Mounting Type	Motor Type		Frame Size		Reduction Ratio		Motor Power Class	Option	Terminal Box	Option	Option Code
FS		–	35	–	50	–	040				
FS		–	25	–	100	–	010			X	
①	②		③		④		⑤	⑥	⑦	⑧	⑨

①Mounting Type (Note 1)	FS : Right Angle Hollow Bore Type (Frame size 55 is cast iron only)
②Motor Type	Blank : Without Motor (Double Shaft Type)
③Frame Size and Output Shaft Diameter	Output Shaft Diameter (Internal Diameter)
④Reduction Ratio	5: 1/5 to 240: 1/240
⑤Motor Power Class	010 : 0.1 kW Class
	020 : 0.2 kW Class
	040 : 0.4 kW Class
	075 : 0.75 kW Class
	150 : 1.5 kW Class
	220 : 2.2 kW Class
⑥ ⑦Options	Blank : Standard Specification There is no applicable option.
⑧Option	Blank : Standard Specification
	X : Special Specification Code
⑨Option Code (Note 2)	Blank : Standard Specification

Note 1: Right angle shaft types are not available.
Note 2: The option code will not be shown in the nomenclature on the nameplate. But it will be shown in the Option code row of the nameplate.

FA Type Gearboxes (Double Shaft Type) MID Series <Right Angle Hollow Bore/FAS>

Mounting Type	Motor Type		Frame Size		Reduction Ratio		Motor Power Class	Option	Terminal Box	Option	Option Code
FAS		–	55	–	10	–	150				
①	②		③		④		⑤	⑥	⑦	⑧	⑨

①Mounting Type (Note 1)	FAS : Right Angle Hollow Bore Type (55-frame only)
②Motor Type	Blank : Without Motor (Double Shaft Type)
③Frame Size and Output Shaft Diameter	Output Shaft Diameter (Internal Diameter)
④Reduction Ratio	5: 1/5 to 120: 1/120 (7.5=7, 12.5=12)
⑤Motor Power Class	150 : 1.5 kW Class
	220 : 2.2 kW Class
⑥ ⑦Options	Blank : Standard Specification There is no applicable option.
⑧Option	Blank : Standard Specification
	X : Special Specification Code
⑨Option Code (Note 2)	Blank : Standard Specification

Note 1: Right angle shaft types are not available.
Note 2: The option code will not be shown in the nomenclature on the nameplate. But it will be shown in the Option code row of the nameplate.

F Type S-Type Gearboxes MID Series <Right Angle Hollow Bore/FS>

Mounting Type	Motor Type		Frame Size		Reduction Ratio		Motor Power Class	Option	Terminal Box	Option
FS	S	–	35	–	50	–	040			
FS	S	–	30	–	100	–	020			X
①	②		③		④		⑤	⑥	⑦	⑧

①Mounting Type (Note 1)	FS	: Right Angle Hollow Bore Type (Frame size 55 is cast iron only)
②Motor Type	S	: Can be Equipped with Designated Motor (S-Type)
③Frame Size and Output Shaft Diameter	Output Shaft Diameter (Internal Diameter)	
④Reduction Ratio	5: 1/5 to 240: 1/240 (7.5=7, 12.5=12)	
⑤Motor Power Class	010	: 0.1 kW Class
	020	: 0.2 kW Class
	040	: 0.4 kW Class
	075	: 0.75 kW Class
	150	: 1.5 kW Class
	220	: 2.2 kW Class
⑥ ⑦Options	Blank	: Standard Specification
⑧Option	Blank	: Standard Specification
	X	: Special Specification Code

Note 1: Right angle shaft types are not available.

Model and Type Codes

FA Type S-Type Gearboxes MID Series <Right Angle Hollow Bore/FAS>

Mounting Type	Motor Type		Frame Size		Reduction Ratio		Motor Power Class	Option	Terminal Box	Option
FAS	S	–	55	–	30	–	220			
①	②		③		④		⑤	⑥	⑦	⑧

①Mounting Type (Note 1)	FAS : Right Angle Hollow Bore Type (Frame size 55 is aluminum only)
②Motor Type	S : Can be Equipped with Designated Motor (S-Type)
③Frame Size and Output Shaft Diameter	Output Shaft Diameter (Internal Diameter)
④Reduction Ratio	5: 1/5 to 120: 1/120
⑤Motor Power Class	150 : 1.5 kW Class
	220 : 2.2 kW Class
⑥ ⑦Options	Blank : Standard Specification
⑧Option	Blank : Standard Specification
	X : Special Specification Code

Note 1: Right angle shaft types are not available.

Standard Model Lineup

F Type Gearmotors/Gearmotors with Brake MID Series <Right Angle Hollow Bore/ FS>

Part Number	4 Poles Motor Power	Frame Size	Reduction Ratio
Gearmotors / Gearmotors with Brake / Brakemotors with Manual Release	3-Phase 0.1 kW	25	1/10, 1/12.5, 1/15, 1/20, 1/25, 1/30, 1/40, 1/50, 1/60, 1/80, 1/100, 1/120, 1/160, 1/200, **1/240**
		30	1/300, 1/375, 1/450
		35	1/600, 1/750, 1/900, **1/1200**, **1/1500**
	3-Phase 0.2 kW	30	1/5, 1/7.5, 1/10, 1/12.5, 1/15, 1/20, 1/25, 1/30, 1/40, 1/50, 1/60, 1/80, 1/100, 1/120, 1/160, **1/200**, **1/240**
		35	1/300, 1/375, **1/450**
		45	1/600, 1/750, **1/900**, **1/1200**, **1/1500**
	3-Phase 0.4 kW	35	1/5, 1/7.5, 1/10, 1/12.5, 1/15, 1/20, 1/25, 1/30, 1/40, 1/50, 1/60, 1/80, 1/100, 1/120, **1/160**, **1/200**, **1/240**
		45	1/300, 1/375, **1/450**
		55	**1/600**, **1/750**, **1/900**, **1/1200**, **1/1500**
	3-Phase 0.75 kW	45	1/5, 1/7.5, 1/10, 1/12.5, 1/15, 1/20, 1/25, 1/30, 1/40, 1/50, 1/60, 1/80, 1/100, 1/120, **1/160**, **1/200**, **1/240**
		55	**1/300**, **1/375**, **1/450**
	3-Phase 1.5 kW	55	1/5, 1/7.5, 1/10, 1/12.5, 1/15, 1/20, 1/25, 1/30, 1/40, 1/50, 1/60, 1/80, 1/100, 1/120, **1/160**, **1/200**, **1/240**
	3-Phase 2.2 kW	55	1/5, 1/7.5, 1/10, 1/12.5, 1/15, 1/20, 1/25, 1/30, 1/40, 1/50, 1/60, 1/80, **1/100**, **1/120**

Note 1: ▭ indicates a limited torque type. Please make sure to check the allowable output shaft torque in the performance table.

F Type Gearmotors/Gearmotors with Brake MID Series <Right Angle Hollow Bore/ FS>

Part Number	4 Poles Motor Power	Frame Size	Reduction Ratio
Gearmotors / Gearmotors with Brake	1-Phase 0.1 kW	25	1/10, 1/12.5, 1/15, 1/20, 1/25, 1/30, 1/40, 1/50, 1/60, 1/80, 1/100, 1/120, 1/160, 1/200, **1/240**
	1-Phase 0.2 kW	30	1/5, 1/7.5, 1/10, 1/12.5, 1/15, 1/20, 1/25, 1/30, 1/40, 1/50, 1/60, 1/80, 1/100, 1/120, 1/160, **1/200**, **1/240**
		35	1/300, 1/375, **1/450**
		45	1/600, 1/750, **1/900**, **1/1200**, **1/1500**
	1-Phase 0.4 kW	35	1/5, 1/7.5, 1/10, 1/12.5, 1/15, 1/20, 1/25, 1/30, 1/40, 1/50, 1/60, 1/80, 1/100, 1/120, **1/160**, **1/200**, **1/240**
		45	1/300, 1/375, **1/450**
		55	**1/600**, **1/750**, **1/900**, **1/1200**, **1/1500**

Note 1: ▭ indicates a limited torque type. Please make sure to check the allowable output shaft torque in the performance table.

FA Type Gearmotors/Gearmotors with Brake MID Series <Right Angle Hollow Bore/ FAS>

Part Number	4 Poles Motor Power	Frame Size	Reduction Ratio
Gearmotors / Gearmotors with Brake / Brakemotors with Manual Release	3-Phase 0.4 kW	55	1/600, 1/750, 1/900, 1/1200, 1/1500
	3-Phase 0.75 kW	55	1/300, 1/375, 1/450
	3-Phase 1.5 kW	55	1/5, 1/7.5, 1/10, 1/12.5, 1/15, 1/20, 1/25, 1/30, 1/40, 1/50, 1/60, 1/80, 1/100, 1/120, 1/160, 1/200, 1/240
	3-Phase 2.2 kW	55	1/5, 1/7.5, 1/10, 1/12.5, 1/15, 1/20, 1/25, 1/30, 1/40, 1/50, 1/60, 1/80, 1/100, 1/120

Note 1: ▭ indicates a limited torque type. Please make sure to check the allowable output shaft torque in the performance table.

FA Type Gearmotors/Gearmotors with Brake MID Series <Right Angle Hollow Bore/ FAS>

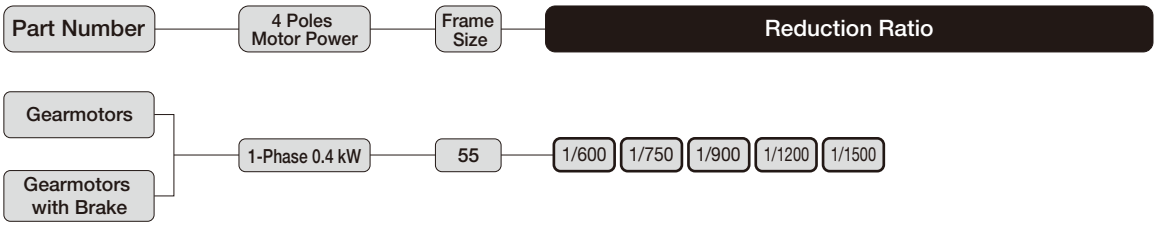

Note 1: ▭ indicates a limited torque type. Please make sure to check the allowable output shaft torque in the performance table.

F Type Gearmotors/Gearmotors with Brake MID Series <Right Angle Shaft/ FF>

Part Number — 4 Poles Motor Power — Frame Size — Shaft Arrangement — Reduction Ratio

- Gearmotors
- Gearmotors with Brake
- Brakemotors with Manual Release

4 Poles Motor Power	Frame Size	Shaft Arrangement	Reduction Ratio
3-Phase 0.1 kW	22	L, R, T	1/10, 1/12.5, 1/15, 1/20, 1/25, 1/30, 1/40, 1/50, 1/60, 1/80, 1/100, 1/120, 1/160, 1/200, **1/240**
3-Phase 0.2 kW	28	L, R, T	1/5, 1/7.5, 1/10, 1/12.5, 1/15, 1/20, 1/25, 1/30, 1/40, 1/50, 1/60, 1/80, 1/100, 1/120, 1/160, **1/200**, **1/240**
3-Phase 0.4 kW	32	L, R, T	1/5, 1/7.5, 1/10, 1/12.5, 1/15, 1/20, 1/25, 1/30, 1/40, 1/50, 1/60, 1/80, 1/100, 1/120, **1/160**, **1/200**, **1/240**
3-Phase 0.75 kW	40	L, R, T	1/5, 1/7.5, 1/10, 1/12.5, 1/15, 1/20, 1/25, 1/30, 1/40, 1/50, 1/60, 1/80, 1/100, 1/120, **1/160**, **1/200**, **1/240**

Note 1: ▭ indicates a limited torque type. Please make sure to check the allowable output shaft torque in the performance table.

F Type IP65 Gearmotors/IP65 Gearmotors with Brake MID Series <Right Angle Hollow Bore/ FS>

Part Number	4 Poles Motor Power	Frame Size	Reduction Ratio
IP65 Gearmotors / IP65 Gearmotors with Brake	3-Phase 0.1 kW	25	1/10, 1/12.5, 1/15, 1/20, 1/25, 1/30, 1/40, 1/50, 1/60, 1/80, 1/100, 1/120, 1/160, 1/200, **1/240**
		30	1/300, 1/375, 1/450
		35	1/600, 1/750, 1/900, **1/1200**, **1/1500**
	3-Phase 0.2 kW	30	1/5, 1/7.5, 1/10, 1/12.5, 1/15, 1/20, 1/25, 1/30, 1/40, 1/50, 1/60, 1/80, 1/100, 1/120, 1/160, **1/200**, **1/240**
		35	1/300, 1/375, **1/450**
		45	1/600, 1/750, **1/900**, **1/1200**, **1/1500**
	3-Phase 0.4 kW	35	1/5, 1/7.5, 1/10, 1/12.5, 1/15, 1/20, 1/25, 1/30, 1/40, 1/50, 1/60, 1/80, 1/100, 1/120, **1/160**, **1/200**, **1/240**
		45	1/300, 1/375, **1/450**
		55	**1/600**, **1/750**, **1/900**, **1/1200**, **1/1500**
	3-Phase 0.75 kW	45	1/5, 1/7.5, 1/10, 1/12.5, 1/15, 1/20, 1/25, 1/30, 1/40, 1/50, 1/60, 1/80, 1/100, 1/120, **1/160**, **1/200**, **1/240**
		55	**1/300**, **1/375**, **1/450**
	(Note 1) 3-Phase 1.5 kW	55	1/5, 1/7.5, 1/10, 1/12.5, 1/15, 1/20, 1/25, 1/30, 1/40, 1/50, 1/60, 1/80, 1/100, 1/120, **1/160**, **1/200**, **1/240**
	(Note 1) 3-Phase 2.2 kW	55	1/5, 1/7.5, 1/10, 1/12.5, 1/15, 1/20, 1/25, 1/30, 1/40, 1/50, 1/60, 1/80, **1/100**, **1/120**

Note 1: IP65 gearmotors with a brake are not available with motor powers of 1.5 kW and 2.2 kW.
Note 2: ▭ indicates a limited torque type. Please make sure to check the allowable output shaft torque in the performance table.

FA Type IP65 Gearmotors/IP65 Gearmotors with Brake MID Series <Right Angle Hollow Bore/ FAS>

Part Number	4 Poles Motor Power	Frame Size	Reduction Ratio
IP65 Gearmotors	3-Phase 0.4 kW	55	1/600, 1/750, 1/900, 1/1200, 1/1500
IP65 Gearmotors	3-Phase 0.75 kW	55	1/300, 1/375, 1/450
IP65 Gearmotors with Brake	(Note 1) 3-Phase 1.5 kW	55	1/5, 1/7.5, 1/10, 1/12.5, 1/15, 1/20, 1/25, 1/30, 1/40, 1/50, 1/60, 1/80, 1/100, 1/120, 1/160, 1/200, 1/240
IP65 Gearmotors with Brake	(Note 1) 3-Phase 2.2 kW	55	1/5, 1/7.5, 1/10, 1/12.5, 1/15, 1/20, 1/25, 1/30, 1/40, 1/50, 1/60, 1/80, 1/100, 1/120

Note 1: IP65 gearmotors with a brake are not available with motor powers of 1.5 kW and 2.2 kW.
Note 2: ▭ indicates a limited torque type. Please make sure to check the allowable output shaft torque in the performance table.

F Type Gearboxes (Double Shaft Type) MID Series <Right Angle Hollow Bore/FS>

Part Number	Motor Power Class	Frame Size	Reduction Ratio
Gearboxes (Double Shaft Type)	0.1 kW	25	1/10, 1/12.5, 1/15, 1/20, 1/25, 1/30, 1/40, 1/50, 1/60, 1/80, 1/100, 1/120, 1/160, 1/200, **1/240**
	0.2 kW	30	1/5, 1/7.5, 1/10, 1/12.5, 1/15, 1/20, 1/25, 1/30, 1/40, 1/50, 1/60, 1/80, 1/100, 1/120, 1/160, **1/200**, **1/240**
	0.4 kW	35	1/5, 1/7.5, 1/10, 1/12.5, 1/15, 1/20, 1/25, 1/30, 1/40, 1/50, 1/60, 1/80, 1/100, 1/120, **1/160**, **1/200**, **1/240**
	0.75 kW	45	1/5, 1/7.5, 1/10, 1/12.5, 1/15, 1/20, 1/25, 1/30, 1/40, 1/50, 1/60, 1/80, 1/100, 1/120, **1/160**, **1/200**, **1/240**
	1.5 kW	55	1/5, 1/7.5, 1/10, 1/12.5, 1/15, 1/20, 1/25, 1/30, 1/40, 1/50, 1/60, 1/80, 1/100, 1/120, **1/160**, **1/200**, **1/240**
	2.2 kW	55	1/5, 1/7.5, 1/10, 1/12.5, 1/15, 1/20, 1/25, 1/30, 1/40, 1/50, 1/60, 1/80, **1/100**, **1/120**

Note 1: ▭ indicates a limited torque type. Please make sure to check the allowable output shaft torque in the performance table.

FA Type Gearboxes (Double Shaft Type) MID Series <Right Angle Hollow Bore/FAS>

Part Number	Motor Power Class	Frame Size	Reduction Ratio
Gearboxes (Double Shaft Type)	1.5 kW	55	1/5, 1/7.5, 1/10, 1/12.5, 1/15, 1/20, 1/25, 1/30, 1/40, 1/50, 1/60, 1/80, 1/100, 1/120, **1/160**, **1/200**, **1/240**
	2.2 kW	55	1/5, 1/7.5, 1/10, 1/12.5, 1/15, 1/20, 1/25, 1/30, 1/40, 1/50, 1/60, 1/80, **1/100**, **1/120**

Note 1: ▭ indicates a limited torque type. Please make sure to check the allowable output shaft torque in the performance table.

F Type S-Type Gearboxes MID Series <Right Angle Hollow Bore/FS>

Part Number	Motor Power Class	Frame Size	Reduction Ratio
S-Type Gearboxes	0.1 kW	25	1/10, 1/12.5, 1/15, 1/20, 1/25, 1/30, 1/40, 1/50, 1/60, 1/80, 1/100, 1/120, 1/160, 1/200, **1/240**
	0.2 kW	30	1/5, 1/7.5, 1/10, 1/12.5, 1/15, 1/20, 1/25, 1/30, 1/40, 1/50, 1/60, 1/80, 1/100, 1/120, 1/160, **1/200**, **1/240**
	0.4 kW	35	1/5, 1/7.5, 1/10, 1/12.5, 1/15, 1/20, 1/25, 1/30, 1/40, 1/50, 1/60, 1/80, 1/100, 1/120, **1/160**, **1/200**, **1/240**
	0.75 kW	45	1/5, 1/7.5, 1/10, 1/12.5, 1/15, 1/20, 1/25, 1/30, 1/40, 1/50, 1/60, 1/80, 1/100, 1/120, **1/160**, **1/200**, **1/240**
	1.5 kW	55	1/5, 1/7.5, 1/10, 1/12.5, 1/15, 1/20, 1/25, 1/30, 1/40, 1/50, 1/60, 1/80, 1/100, 1/120, **1/160**, **1/200**, **1/240**
	2.2 kW	55	1/5, 1/7.5, 1/10, 1/12.5, 1/15, 1/20, 1/25, 1/30, 1/40, 1/50, 1/60, 1/80, **1/100**, **1/120**

Note 1: ▭ indicates a limited torque type. Please make sure to check the allowable output shaft torque in the performance table.

FA Type S-Type Gearboxes MID Series <Right Angle Hollow Bore/FAS>

Part Number	Motor Power Class	Frame Size	Reduction Ratio
S-Type Gearboxes	1.5 kW	55	1/5, 1/7.5, 1/10, 1/12.5, 1/15, 1/20, 1/25, 1/30, 1/40, 1/50, 1/60, 1/80, 1/100, 1/120, **1/160**, **1/200**, **1/240**
	2.2 kW	55	1/5, 1/7.5, 1/10, 1/12.5, 1/15, 1/20, 1/25, 1/30, 1/40, 1/50, 1/60, 1/80, **1/100**, **1/120**

Note 1: ▭ indicates a limited torque type. Please make sure to check the allowable output shaft torque in the performance table.

MEMO

1. Gearmotors Gearmotors with Brake

1-1. Motor Characteristics Table

F Type 3-Phase Standard Voltage/High Voltage (400 V Class)/Special Voltage <Right Angle Hollow Bore/FS>

Series	Power	Power Supply/ Certification Codes	Voltage (V)	Frequency (Hz)	Rated Current (A)	Startup Current (A)	Rated Speed (r/min)
MID	0.1kW	NN	200/200/220	50/60/60	0.61/0.54/0.54	2.39/2.27/2.52	1410/1690/1710
		WN	380/400/400/440	50/50/60/60	0.31/0.31/0.28/0.28	1.12/1.18/1.12/1.22	1400/1410/1690/1720
		KN	220/380	60/60	0.52/0.30	1.90/1.10	1680/1680
		CN	220/230/380	50/50/50	0.55/0.54/0.31	1.94/2.03/1.12	1400/1410/1400
		DN	220/220/380/380	50/60/50/60	0.55/0.52/0.31/0.30	1.94/1.90/1.12/1.10	1400/1680/1400/1680
		EN	415/440/480	50/50/60	0.30/0.29/0.26	1.06/1.12/1.17	1390/1420/1720
		AN	208/230/460/400	60/60/60/50	0.54/0.57/0.29/0.31	2.35/2.62/1.26/1.21	1690/1730/1730/1410
		MA	575	60	0.20	0.87	1700
	0.2 kW IE2	NN	200/200/220	50/60/60	1.1/1.0/1.0	4.70/4.35/4.85	1400/1680/1700
		WN	380/400/400/440	50/50/60/60	0.56/0.56/0.50/0.50	2.29/2.38/2.29/2.48	1390/1400/1680/1710
		KN	220/380	60/60	0.93/0.52	3.70/2.20	1680/1680
		CN	220/230/380	50/50/50	0.99/0.98/0.56	3.97/4.15/2.29	1400/1410/1390
		DN	220/220/380/380	50/60/50/60	0.99/0.93/0.56/0.52	3.97/3.70/2.29/2.20	1400/1680/1390/1680
		EN	415/440/480	50/50/60	0.50/0.50/0.45	1.75/1.86/2.00	1370/1400/1700
		AN	208/230/460/400	60/60/60/50	1.0/1.0/0.50/0.56	4.78/5.16/2.56/2.44	1680/1720/1720/1400
		MA	575	60	0.40	1.78	1710
	0.4 kW IE2	NN	200/200/220	50/60/60	2.1/1.8/1.8	9.60/8.54/9.21	1400/1680/1700
		WN	380/400/400/440	50/50/60/60	1.0/1.0/0.9/0.9	4.43/4.64/4.24/4.85	1390/1400/1680/1710
		KN	220/380	60/60	1.7/1.0	7.10/4.09	1670/1670
		CN	220/230/380	50/50/50	1.8/1.8/1.0	7.63/8.04/4.43	1390/1400/1390
		DN	220/220/380/380	50/60/50/60	1.8/1.7/1.0/1.0	7.63/7.10/4.43/4.09	1390/1670/1390/1670
		EN	415/440/480	50/50/60	0.96/0.95/0.82	4.45/4.56/4.52	1390/1410/1680
		AN	208/230/460/400	60/60/60/50	1.8/1.8/0.9/1.0	9.21/9.82/5.06/4.62	1680/1720/1720/1400
		MA	575	60	0.68	3.94	1700
	0.75 kW IE3	NN	200/200/220	50/60/60	3.5/3.2/3.1	21.8/19.0/21.1	1450/1740/1750
		WN	380/400/400/440	50/50/60/60	1.73/1.72/1.58/1.54	10.2/10.8/9.8/10.7	1440/1450/1740/1750
		KN	220/380	60/60	2.9/1.7	16.9/9.8	1740/1740
		CN	220/230/380	50/50/50	3.0/3.0/1.7	17.8/18.7/10.3	1450/1450/1440
		DN	220/220/380/380	50/60/50/60	3.1/2.9/1.8/1.7	19.3/16.9/11.2/9.8	1450/1740/1450/1740
		EN	415/440/480	50/50/60	1.54/1.52/1.36	8.6/9.3/9.0	1440/1450/1750
		UN	230/460/400	60/60/50	3.1/1.5/1.7	22.3/11.2/10.8	1760/1760/1450
		MA	575	60	1.16	7.2	1750
	1.5 kW IE3	NN	200/200/220	50/60/60	6.7/6.1/5.9	45.6/40.3/45.1	1450/1740/1760
		WN	380/400/400/440	50/50/60/60	3.4/3.4/3.1/3.0	21.9/23.2/20.4/22.8	1450/1450/1750/1760
		KN	220/380	60/60	5.9/3.4	45.1/25.8	1760/1760
		CN	220/230/380	50/50/50	5.9/5.9/3.4	38.5/40.4/22.1	1450/1450/1450
		EN	415/440/480	50/50/60	3.1/3.1/2.8	20.8/22.2/21.2	1450/1460/1760
		UN	230/460/400	60/60/50	5.9/2.9/3.3	44.9/22.6/23.2	1760/1760/1450
		MA	575	60	2.2	17.0	1760
	2.2 kW IE3	NN	200/200/220	50/60/60	9.3/8.6/8.2	70.3/56.9/63.7	1470/1760/1770
		WN	380/400/400/440	50/50/60/60	4.5/4.4/4.2/3.9	30.0/32.0/25.0/28.0	1440/1450/1740/1750
		KN	220/380	60/60	8.3/4.8	65.0/38.0	1770/1770
		CN	220/230/380	50/50/50	7.9/7.7/4.5	52.0/54.3/30.0	1460/1470/1440
		EN	415/440/480	50/50/60	4.3/4.3/3.8	33.1/35.5/29.8	1460/1470/1770
		UN	230/460/400	60/60/50	7.9/4.0/4.5	65.2/34.8/36.3	1770/1770/1470
		MA	575	60	3.3	24.4	1760

The rated current in the motor characteristics table is the current data for the motor operating without a gearbox.
With regard to gearmotors with a brake, it is necessary to consider the current value flowing through the brake as needed.
For more details, please contact your nearest Sales Office or the CS Center.

F Type 1-Phase Standard Voltage <Right Angle Hollow Bore/FS>

Series	Power	Startup Method	Voltage (V)	Frequency (Hz)	Rated Current (A)	Startup Current (A)	Rated Speed (r/min)	Startup Torque (%)	Breakdown Torque (%)
MID	0.1 kW	Capacitor Run	100/100	50/60	1.7/1.9	4.40/4.07	1400/1700	60/70	165/172
	0.2 kW	Capacitor Start	100/100	50/60	5.1/4.5	20.0/20.0	1420/1700	276/294	194/187
	0.4 kW	Capacitor Start	100/100	50/60	8.7/7.9	32.0/32.0	1440/1730	210/205	189/178

The rated current in the motor characteristics table is the current data for the motor operating without a gearbox.
With regard to gearmotors with a brake, it is necessary to consider the current value flowing through the brake as needed.
For more details, please contact your nearest Sales Office or the CS Center.

F Type 1-Phase High Voltage (200 V Class) <Right Angle Hollow Bore/FS>

Series	Power	Startup Method	Voltage (V)	Frequency (Hz)	Rated Current (A)	Startup Current (A)	Rated Speed (r/min)	Startup Torque (%)	Breakdown Torque (%)
MID	0.1 kW	Capacitor Run	200/200	50/60	0.82/0.96	2.10/2.00	1410/1700	65/81	163/178
	0.2 kW	Capacitor Start	200/200	50/60	2.5/2.2	10.0/10.0	1420/1700	254/250	203/205
	0.4 kW	Capacitor Start	200/200	50/60	4.3/3.9	19.0/18.0	1440/1730	181/190	240/217

The rated current in the motor characteristics table is the current data for the motor operating without a gearbox.
With regard to gearmotors with a brake, it is necessary to consider the current value flowing through the brake as needed.
For more details, please contact your nearest Sales Office or the CS Center.

FA Type 3-Phase Standard Voltage/High Voltage (400 V Class)/Special Voltage <Right Angle Hollow Bore/FAS>

Series	Power	Power Supply/ Certification Codes	Voltage (V)	Frequency (Hz)	Rated Current (A)	Startup Current (A)	Rated Speed (r/min)
MID	0.4 kW IE2	NN	200/200/220	50/60/60	2.1/1.8/1.8	9.60/8.54/9.21	1400/1680/1700
		WN	380/400/400/440	50/50/60/60	1.0/1.0/0.9/0.9	4.43/4.64/4.24/4.85	1390/1400/1680/1710
		KN	220/380	60/60	1.7/1.0	7.10/4.09	1670/1670
		CN	220/230/380	50/50/50	1.8/1.8/1.0	7.63/8.04/4.43	1390/1400/1390
		DN	220/220/380/380	50/60/50/60	1.8/1.7/1.0/1.0	7.63/7.10/4.43/4.09	1390/1670/1390/1670
		EN	415/440/480	50/50/60	0.96/0.95/0.82	4.45/4.56/4.52	1390/1410/1680
		AN	208/230/460/400	60/60/60/50	1.8/1.8/0.9/1.0	9.21/9.82/5.06/4.62	1680/1720/1720/1400
		MA	575	60	0.68	3.94	1700
	0.75 kW IE3	NN	200/200/220	50/60/60	3.5/3.2/3.1	21.8/19.0/21.1	1450/1740/1750
		WN	380/400/400/440	50/50/60/60	1.73/1.72/1.58/1.54	10.2/10.8/9.8/10.7	1440/1450/1740/1750
		KN	220/380	60/60	2.9/1.7	16.9/9.8	1740/1740
		CN	220/230/380	50/50/50	3.0/3.0/1.7	17.8/18.7/10.3	1450/1450/1440
		DN	220/220/380/380	50/60/50/60	3.1/2.9/1.8/1.7	19.3/16.9/11.2/9.8	1450/1740/1450/1740
		EN	415/440/480	50/50/60	1.54/1.52/1.36	8.6/9.3/9.0	1440/1450/1750
		UN	230/460/400	60/60/50	3.1/1.5/1.7	22.3/11.2/10.8	1760/1760/1450
		MA	575	60	1.16	7.2	1750
	1.5 kW IE3	NN	200/200/220	50/60/60	6.7/6.1/5.9	45.6/40.3/45.1	1450/1740/1760
		WN	380/400/400/440	50/50/60/60	3.4/3.4/3.1/3.0	21.9/23.2/20.4/22.8	1450/1450/1750/1760
		KN	220/380	60/60	5.9/3.4	45.1/25.8	1760/1760
		CN	220/230/380	50/50/50	5.9/5.9/3.4	38.5/40.4/22.1	1450/1450/1450
		EN	415/440/480	50/50/60	3.1/3.1/2.8	20.8/22.2/21.2	1450/1460/1760
		UN	230/460/400	60/60/50	5.9/2.9/3.3	44.9/22.6/23.2	1760/1760/1450
		MA	575	60	2.2	17.0	1760
	2.2 kW IE3	NN	200/200/220	50/60/60	9.3/8.6/8.2	70.3/56.9/63.7	1470/1760/1770
		WN	380/400/400/440	50/50/60/60	4.5/4.4/4.2/3.9	30.0/32.0/25.0/28.0	1440/1450/1740/1750
		KN	220/380	60/60	8.3/4.8	65.0/38.0	1770/1770
		CN	220/230/380	50/50/50	7.9/7.7/4.5	52.0/54.3/30.0	1460/1470/1440
		EN	415/440/480	50/50/60	4.3/4.3/3.8	33.1/35.5/29.8	1460/1470/1770
		UN	230/460/400	60/60/50	7.9/4.0/4.5	65.2/34.8/36.3	1770/1770/1470
		MA	575	60	3.3	24.4	1760

The rated current in the motor characteristics table is the current data for the motor operating without a gearbox.
With regard to gearmotors with a brake, it is necessary to consider the current value flowing through the brake as needed.
For more details, please contact your nearest Sales Office or the CS Center.

FA Type 1-Phase Standard Voltage <Right Angle Hollow Bore/FAS>

Series	Power	Startup Method	Voltage (V)	Frequency (Hz)	Rated Current (A)	Startup Current (A)	Rated Speed (r/min)	Startup Torque (%)	Breakdown Torque (%)
MID	0.4kW	Capacitor Run	100/100	50/60	8.7/7.9	32.0/32.0	1440/1730	210/205	189/178

The rated current in the motor characteristics table is the current data for the motor operating without a gearbox.
With regard to gearmotors with a brake, it is necessary to consider the current value flowing through the brake as needed.
For more details, please contact your nearest Sales Office or the CS Center.

FA Type 1-Phase High Voltage (200 V Class) <Right Angle Hollow Bore/FAS>

Series	Power	Startup Method	Voltage (V)	Frequency (Hz)	Rated Current (A)	Startup Current (A)	Rated Speed (r/min)	Startup Torque (%)	Breakdown Torque (%)
MID	0.4kW	Capacitor Run	200/200	50/60	4.3/3.9	19.0/18.0	1440/1730	181/190	240/217

The rated current in the motor characteristics table is the current data for the motor operating without a gearbox.
With regard to gearmotors with a brake, it is necessary to consider the current value flowing through the brake as needed.
For more details, please contact your nearest Sales Office or the CS Center.

F Type 3-Phase Standard Voltage/High Voltage (400 V Class)/Special Voltage <Right Angle Shaft/FF>

Series	Power	Power Supply/ Certification Codes	Voltage (V)	Frequency (Hz)	Rated Current (A)	Startup Current (A)	Rated Speed (r/min)
MID	0.1kW	NN	200/200/220	50/60/60	0.61/0.54/0.54	2.39/2.27/2.52	1410/1690/1710
		WN	380/400/400/440	50/50/60/60	0.31/0.31/0.28/0.28	1.12/1.18/1.12/1.22	1400/1410/1690/1720
		KN	220/380	60/60	0.52/0.30	1.90/1.10	1680/1680
		CN	220/230/380	50/50/50	0.55/0.54/0.31	1.94/2.03/1.12	1400/1410/1400
		DN	220/220/380/380	50/60/50/60	0.55/0.52/0.31/0.30	1.94/1.90/1.12/1.10	1400/1680/1400/1680
		EN	415/440/480	50/50/60	0.30/0.29/0.26	1.06/1.12/1.17	1390/1420/1720
		AN	208/230/460/400	60/60/60/50	0.54/0.57/0.29/0.31	2.35/2.62/1.26/1.21	1690/1730/1730/1410
		MA	575	60	0.20	0.87	1700
	0.2 kW IE2	NN	200/200/220	50/60/60	1.1/1.0/1.0	4.70/4.35/4.85	1400/1680/1700
		WN	380/400/400/440	50/50/60/60	0.56/0.56/0.50/0.50	2.29/2.38/2.29/2.48	1390/1400/1680/1710
		KN	220/380	60/60	0.93/0.52	3.70/2.20	1680/1680
		CN	220/230/380	50/50/50	0.99/0.98/0.56	3.97/4.15/2.29	1400/1410/1390
		DN	220/220/380/380	50/60/50/60	0.99/0.93/0.56/0.52	3.97/3.70/2.29/2.20	1400/1680/1390/1680
		EN	415/440/480	50/50/60	0.50/0.50/0.45	1.75/1.86/2.00	1370/1400/1700
		AN	208/230/460/400	60/60/60/50	1.0/1.0/0.50/0.56	4.78/5.16/2.56/2.44	1680/1720/1720/1400
		MA	575	60	0.40	1.78	1710
	0.4 kW IE2	NN	200/200/220	50/60/60	2.1/1.8/1.8	9.60/8.54/9.21	1400/1680/1700
		WN	380/400/400/440	50/50/60/60	1.0/1.0/0.9/0.9	4.43/4.64/4.24/4.85	1390/1400/1680/1710
		KN	220/380	60/60	1.7/1.0	7.10/4.09	1670/1670
		CN	220/230/380	50/50/50	1.8/1.8/1.0	7.63/8.04/4.43	1390/1400/1390
		DN	220/220/380/380	50/60/50/60	1.8/1.7/1.0/1.0	7.63/7.10/4.43/4.09	1390/1670/1390/1670
		EN	415/440/480	50/50/60	0.96/0.95/0.82	4.45/4.56/4.52	1390/1410/1680
		AN	208/230/460/400	60/60/60/50	1.8/1.8/0.9/1.0	9.21/9.82/5.06/4.62	1680/1720/1720/1400
		MA	575	60	0.68	3.94	1700
	0.75 kW IE3	NN	200/200/220	50/60/60	3.5/3.2/3.1	21.8/19.0/21.1	1450/1740/1750
		WN	380/400/400/440	50/50/60/60	1.73/1.72/1.58/1.54	10.2/10.8/9.8/10.7	1440/1450/1740/1750
		KN	220/380	60/60	2.9/1.7	16.9/9.8	1740/1740
		CN	220/230/380	50/50/50	3.0/3.0/1.7	17.8/18.7/10.3	1450/1450/1440
		DN	220/220/380/380	50/60/50/60	3.1/2.9/1.8/1.7	19.3/16.9/11.2/9.8	1450/1740/1450/1740
		EN	415/440/480	50/50/60	1.54/1.52/1.36	8.6/9.3/9.0	1440/1450/1750
		UN	230/460/400	60/60/50	3.1/1.5/1.7	22.3/11.2/10.8	1760/1760/1450
		MA	575	60	1.16	7.2	1750

The rated current in the motor characteristics table is the current data for the motor operating without a gearbox.
With regard to gearmotors with a brake, it is necessary to consider the current value flowing through the brake as needed.
For more details, please contact your nearest Sales Office or the CS Center.

1-2. Performance Table

F Type Gearmotors/Gearmotors with Brake <Right Angle Hollow Bore/FS>

[Notes]

- The values in parentheses ( ) in the drawings are the indications for gearmotors with brake.
- The output shaft speed is the value relative to the synchronous speed of the motor and the reduction ratio.
- The key for the output shaft is not included.
- In the performance table, ▭ indicates that the shaft rotates clockwise when viewed from the flange surface side when the connection is made as shown on page 547 (CW). (Refer to the figure on the right)
- Allowable output shaft O.H.L. is the value at 20 mm from the end of the output shaft.
- The "*" mark indicates a limited torque type. Please make sure to check the allowable output shaft torque in the performance table.

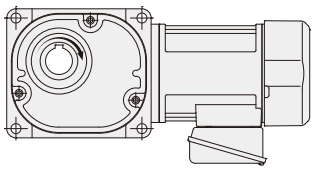

Motor Power	Frame Size	Reduction Ratio	Actual Reduction Ratio	Output Shaft Speed r/min		Allowable Output Shaft Torque N·m		Allowable Output Shaft O.H.L.	Allowable Output Shaft Thrust Load	Drawings
				50 Hz	60 Hz	50 Hz	60 Hz	N	N	
3-Phase 0.1 kW	25	1/10	1/10	150	180	5.2	4.3	1520	382	P.375
		1/12.5	2/25	120	144	6.5	5.4	1620	402	
		1/15	1/15	100	120	7.7	6.5	1720	431	
		1/20	1/20	75	90	11	8.6	1860	471	
		1/25	19/470	60	72	13	11	2010	500	
		1/30	1/30	50	60	16	13	2110	530	
		1/40	1/40	37.5	45	21	18	2300	579	
		1/50	1/50	30	36	25	22	2450	618	
		1/60	1/60	25	30	31	25	2550	637	
		1/80	1/80	18.8	22.5	39	32	2550	637	
		1/100	19/1880	15	18	49	41	2550	637	
		1/120	1/120	12.5	15	59	49	2550	637	
		1/160	1/160	9.4	11.3	78	66	2550	637	
		1/200	1/200	7.5	9	98	81	2550	637	
		* 1/240	1/240	6.3	7.5	101	98	2550	637	
	30	1/300	7/2040	5	6	131	110	3140	785	P.377
		1/375	133/47940	4	4.8	165	137	3140	785	
		1/450	7/3060	3.3	4	198	165	3140	785	
	35	1/600	7/4240	2.5	3	248	207	3630	912	P.379
		1/750	133/99640	2	2.4	311	259	3630	912	
		1/900	7/6360	1.7	2	372	311	3630	912	
		* 1/1200	7/8480	1.3	1.5	372	372	3630	912	
		* 1/1500	7/10600	1	1.2	372	372	3630	912	
3-Phase 0.2 kW	30	1/5	1/5	300	360	5.5	4.6	1520	382	P.377
		1/7.5	2/15	200	240	8.3	7	1760	441	
		1/10	1/10	150	180	11	9.2	1910	481	
		1/12.5	19/235	120	144	14	12	2060	520	
		1/15	1/15	100	120	17	14	2160	539	
		1/20	1/20	75	90	23	19	2400	598	
		1/25	1/25	60	72	27	24	2550	637	
		1/30	1/30	50	60	33	27	2650	667	
		1/40	1/40	37.5	45	44	37	2840	716	
		1/50	1/50	30	36	55	46	2990	745	
		1/60	1/60	25	30	67	55	3090	775	
		1/80	1/80	18.8	22.5	84	71	3090	775	
		1/100	19/1880	15	18	105	87	3140	785	
		1/120	1/120	12.5	15	126	105	3140	785	
		1/160	1/160	9.4	11.3	169	140	3140	785	
		* 1/200	1/200	7.5	9	184	175	3140	785	
		* 1/240	1/240	6.3	7.5	184	184	3140	785	
	35	1/300	7/2120	5	6	282	235	3630	912	P.379
		1/375	133/49820	4	4.8	353	294	3630	912	
		* 1/450	7/3180	3.3	4	372	353	3630	912	
	45	1/600	7/4240	2.5	3	534	446	5190	1275	P.381
		1/750	133/99640	2	2.4	668	557	5190	1275	
		* 1/900	7/6360	1.7	2	713	668	5190	1275	
		* 1/1200	7/8480	1.3	1.5	713	713	5190	1275	
		* 1/1500	7/10600	1	1.2	713	713	5190	1275	

Motor Power	Frame Size	Reduction Ratio	Actual Reduction Ratio	Output Shaft Speed r/min 50 Hz	Output Shaft Speed r/min 60 Hz	Allowable Output Shaft Torque N·m 50 Hz	Allowable Output Shaft Torque N·m 60 Hz	Allowable Output Shaft O.H.L. N	Allowable Output Shaft Thrust Load N	Drawings
3-Phase 0.4 kW	35	1/5	1/5	300	360	11	9.2	1960	490	P.379
		1/7.5	2/15	200	240	17	14	2250	569	
		1/10	1/10	150	180	23	19	2450	618	
		1/12.5	19/235	120	144	27	24	2600	647	
		1/15	1/15	100	120	33	27	2740	686	
		1/20	1/20	75	90	44	37	2990	745	
		1/25	1/25	60	72	55	46	3190	794	
		1/30	1/30	50	60	67	55	3280	824	
		1/40	1/40	37.5	45	88	74	3480	873	
		1/50	1/50	30	36	111	92	3480	873	
		1/60	1/60	25	30	133	111	3480	873	
		1/80	1/80	18.8	22.5	169	140	3480	873	
		1/100	19/1880	15	18	211	175	3530	883	
		1/120	1/120	12.5	15	253	211	3530	883	
		* 1/160	1/160	9.4	11.3	270	270	3630	912	
		* 1/200	1/200	7.5	9	270	270	3630	912	
		* 1/240	1/240	6.3	7.5	270	270	3630	912	
	45	1/300	7/2080	5	6	565	471	5190	1275	P.381
		1/375	133/48880	4	4.8	707	589	5190	1275	
		* 1/450	7/3120	3.3	4	713	707	5190	1275	
	55	* 1/600	49/28600	2.5	3	1030	891	9800	2452	P.383
		* 1/750	11/8320	2	2.4	1030	1030	9800	2452	
		* 1/900	7/6136	1.7	2	1030	1030	9800	2452	
		* 1/1200	49/57200	1.3	1.5	1030	1030	9800	2452	
		* 1/1500	11/16640	1	1.2	1030	1030	9800	2452	
3-Phase 0.75 kW	45	1/5	1/5	300	360	21	18	2940	735	P.381
		1/7.5	2/15	200	240	31	25	3330	834	
		1/10	1/10	150	180	41	34	3630	912	
		1/12.5	19/235	120	144	52	43	3920	980	
		1/15	1/15	100	120	63	52	4070	1030	
		1/20	1/20	75	90	83	70	4460	1079	
		1/25	1/25	60	72	104	86	4700	1177	
		1/30	1/30	50	60	124	104	4750	1177	
		1/40	1/40	37.5	45	166	138	4750	1177	
		1/50	1/50	30	36	208	173	4750	1177	
		1/60	1/60	25	30	249	208	4750	1177	
		1/80	1/80	18.8	22.5	316	263	4750	1177	
		1/100	19/1880	15	18	395	328	4750	1177	
		1/120	1/120	12.5	15	473	395	4750	1177	
		* 1/160	1/160	9.4	11.3	554	526	5190	1275	
		* 1/200	1/200	7.5	9	554	554	5190	1275	
		* 1/240	1/240	6.3	7.5	554	554	5190	1275	
	55	* 1/300	7/2120	5	6	1030	883	9800	2452	P.383
		* 1/375	1/371	4	4.8	1030	1030	9800	2452	
		* 1/450	7/3180	3.3	4	1030	1030	9800	2452	

Note 1: Please be sure to read the notes on page 365.

1-2. Performance Table

Motor Power	Frame Size	Reduction Ratio	Actual Reduction Ratio	Output Shaft Speed		Allowable Output Shaft Torque		Allowable Output Shaft O.H.L.	Allowable Output Shaft Thrust Load	Drawings
				r/min		N·m				
				50 Hz	60 Hz	50 Hz	60 Hz	N	N	
3-Phase 1.5 kW	55	1/5	1/5	300	360	41	34	4700	1177	P.383
		1/7.5	2/15	200	240	63	52	5340	1324	
		1/10	1/10	150	180	83	70	5780	1422	
		1/12.5	4/49	120	144	104	86	6130	1520	
		1/15	1/15	100	120	124	104	6320	1569	
		1/20	14/275	75	90	166	138	6320	1569	
		1/25	11/280	60	72	208	173	6320	1569	
		1/30	2/59	50	60	249	208	6320	1569	
		1/40	1/40	37.5	45	332	276	6320	1569	
		1/50	1/49	30	36	416	345	6320	1569	
		1/60	1/60	25	30	498	416	6320	1569	
		1/80	7/550	18.8	22.5	631	526	6420	1618	
		1/100	11/1120	15	18	789	658	6420	1618	
		1/120	1/118	12.5	15	947	789	7500	1863	
		* 1/160	7/1100	9.4	11.3	1030	1030	8330	2059	
		* 1/200	11/2240	7.5	9	1030	1030	9020	2256	
		* 1/240	1/236	6.3	7.5	1030	1030	9800	2452	
3-Phase 2.2 kW	55	1/5	1/5	300	360	61	51	4700	1177	P.383
		1/7.5	2/15	200	240	91	76	5340	1324	
		1/10	1/10	150	180	122	102	5780	1422	
		1/12.5	4/49	120	144	152	126	6130	1520	
		1/15	1/15	100	120	182	152	6320	1569	
		1/20	14/275	75	90	244	203	6320	1569	
		1/25	11/280	60	72	305	254	6320	1569	
		1/30	2/59	50	60	366	305	6320	1569	
		1/40	1/40	37.5	45	487	406	6320	1569	
		1/50	1/49	30	36	609	508	6320	1569	
		1/60	1/60	25	30	731	609	6320	1569	
		1/80	7/550	18.8	22.5	926	771	6420	1618	
		* 1/100	11/1120	15	18	1030	964	6420	1618	
		* 1/120	1/118	12.5	15	1030	1030	7500	1863	

Note 1: Please be sure to read the notes on page 365.

F Type Gearmotors/Gearmotors with Brake <Right Angle Hollow Bore/FS>

[Notes]

- The values in parentheses ( ) in the drawings are the indications for gearmotors with brake.
- The output shaft speed is the value relative to the synchronous speed of the motor and the reduction ratio.
- The key for the output shaft is not included.
- In the performance table, ▭ indicates that the shaft rotates clockwise when viewed from the flange surface side when the connection is made as shown on page 548 (CW). (Refer to the figure on the right)
- The startup torque of the single-phase 0.1 kW motor is 60 to 80 % because a capacitor run motor is adopted.
- Allowable output shaft O.H.L. is the value at 20 mm from the end of the output shaft.
- The "*" mark indicates a limited torque type. Please make sure to check the allowable output shaft torque in the performance table.

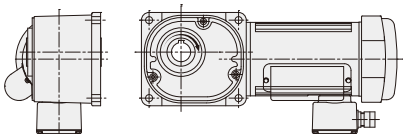

Motor Power	Frame Size	Reduction Ratio	Actual Reduction Ratio	Output Shaft Speed r/min 50 Hz	Output Shaft Speed r/min 60 Hz	Allowable Output Shaft Torque N·m 50 Hz	Allowable Output Shaft Torque N·m 60 Hz	Allowable Output Shaft O.H.L. N	Allowable Output Shaft Thrust Load N	Drawings
1-Phase 0.1 kW	25	1/10	1/10	150	180	5.2	4.3	1520	382	P.376
		1/12.5	2/25	120	144	6.5	5.4	1620	402	
		1/15	1/15	100	120	7.7	6.5	1720	431	
		1/20	1/20	75	90	11	8.6	1860	471	
		1/25	19/470	60	72	13	11	2010	500	
		1/30	1/30	50	60	16	13	2110	530	
		1/40	1/40	37.5	45	21	18	2300	579	
		1/50	1/50	30	36	25	22	2450	618	
		1/60	1/60	25	30	31	25	2550	637	
		1/80	1/80	18.8	22.5	39	32	2550	637	
		1/100	19/1880	15	18	49	41	2550	637	
		1/120	1/120	12.5	15	59	49	2550	637	
		1/160	1/160	9.4	11.3	78	66	2550	637	
		1/200	1/200	7.5	9	98	81	2550	637	
		* 1/240	1/240	6.3	7.5	101	98	2550	637	
1-Phase 0.2 kW	30	1/5	1/5	300	360	5.5	4.6	1520	382	P.378
		1/7.5	2/15	200	240	8.3	7	1760	441	
		1/10	1/10	150	180	11	9.2	1910	481	
		1/12.5	19/235	120	144	14	12	2060	520	
		1/15	1/15	100	120	17	14	2160	539	
		1/20	1/20	75	90	23	19	2400	598	
		1/25	1/25	60	72	27	24	2550	637	
		1/30	1/30	50	60	33	27	2650	667	
		1/40	1/40	37.5	45	44	37	2840	716	
		1/50	1/50	30	36	55	46	2990	745	
		1/60	1/60	25	30	67	55	3090	775	
		1/80	1/80	18.8	22.5	84	71	3090	775	
		1/100	19/1880	15	18	105	87	3140	785	
		1/120	1/120	12.5	15	126	105	3140	785	
		1/160	1/160	9.4	11.3	169	140	3140	785	
		* 1/200	1/200	7.5	9	184	175	3140	785	
		* 1/240	1/240	6.3	7.5	184	184	3140	785	
	35	1/300	7/2120	5	6	282	235	3630	912	P.380
		1/375	133/49820	4	4.8	353	294	3630	912	
		* 1/450	7/3180	3.3	4	372	353	3630	912	
	45	1/600	7/4240	2.5	3	534	446	5190	1275	P.382
		1/750	133/99640	2	2.4	668	557	5190	1275	
		* 1/900	7/6360	1.7	2	713	668	5190	1275	
		* 1/1200	7/8480	1.3	1.5	713	713	5190	1275	
		* 1/1500	7/10600	1	1.2	713	713	5190	1275	

1-2. Performance Table

Motor Power	Frame Size	Reduction Ratio	Actual Reduction Ratio	Output Shaft Speed		Allowable Output Shaft Torque		Allowable Output Shaft O.H.L.	Allowable Output Shaft Thrust Load	Drawings
				r/min		N·m				
				50 Hz	60 Hz	50 Hz	60 Hz	N	N	
1-Phase 0.4 kW	35	1/5	1/5	300	360	11	9.2	1960	490	P.380
		1/7.5	2/15	200	240	17	14	2250	569	
		1/10	1/10	150	180	23	19	2450	618	
		1/12.5	19/235	120	144	27	24	2600	647	
		1/15	1/15	100	120	33	27	2740	686	
		1/20	1/20	75	90	44	37	2990	745	
		1/25	1/25	60	72	55	46	3190	794	
		1/30	1/30	50	60	67	55	3280	824	
		1/40	1/40	37.5	45	88	74	3480	873	
		1/50	1/50	30	36	111	92	3480	873	
		1/60	1/60	25	30	133	111	3480	873	
		1/80	1/80	18.8	22.5	169	140	3480	873	
		1/100	19/1880	15	18	211	175	3530	883	
		1/120	1/120	12.5	15	253	211	3530	883	
		* 1/160	1/160	9.4	11.3	270	270	3630	912	
		* 1/200	1/200	7.5	9	270	270	3630	912	
		* 1/240	1/240	6.3	7.5	270	270	3630	912	
	45	1/300	7/2080	5	6	565	471	5190	1275	P.382
		1/375	133/48880	4	4.8	707	589	5190	1275	
		* 1/450	7/3120	3.3	4	713	707	5190	1275	
	55	* 1/600	49/28600	2.5	3	1030	891	9800	2452	P.384
		* 1/750	11/8320	2	2.4	1030	1030	9800	2452	
		* 1/900	7/6136	1.7	2	1030	1030	9800	2452	
		* 1/1200	49/57200	1.3	1.5	1030	1030	9800	2452	
		* 1/1500	11/16640	1	1.2	1030	1030	9800	2452	

FA Type Gearmotors/Gearmotors with Brake <Right Angle Hollow Bore/FAS>

[Notes]

- The values in parentheses ( ) in the drawings are the indications for gearmotors with brake.
- The output shaft speed is the value relative to the synchronous speed of the motor and the reduction ratio.
- The key for the output shaft is not included.
- In the performance table, ▭ indicates that the shaft rotates clockwise when viewed from the flange surface side when the connection is made as shown on page 547 (CW). (Refer to the figure on the right)
- Allowable output shaft O.H.L. is the value at 20 mm from the end of the output shaft.
- The "*" mark indicates a limited torque type. Please make sure to check the allowable output shaft torque in the performance table.

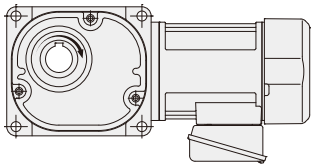

Motor Power	Frame Size	Reduction Ratio	Actual Reduction Ratio	Output Shaft Speed r/min 50 Hz	Output Shaft Speed r/min 60 Hz	Allowable Output Shaft Torque N·m 50 Hz	Allowable Output Shaft Torque N·m 60 Hz	Allowable Output Shaft O.H.L. N	Allowable Output Shaft Thrust Load N	Drawings
3-Phase 0.4kW	55	* 1/600	49/28600	2.5	3	1030	891	9800	2452	P.385
		* 1/750	11/8320	2	2.4	1030	1030	9800	2452	
		* 1/900	7/6136	1.7	2	1030	1030	9800	2452	
		* 1/1200	49/57200	1.3	1.5	1030	1030	9800	2452	
		* 1/1500	11/16640	1	1.2	1030	1030	9800	2452	
3-Phase 0.75kW	55	* 1/300	7/2120	5	6	1030	883	9800	2452	P.385
		* 1/375	1/371	4	4.8	1030	1030	9800	2452	
		* 1/450	7/3180	3.3	4	1030	1030	9800	2452	
3-Phase 1.5kW	55	1/5	1/5	300	360	41	34	4700	1177	P.385
		1/7.5	2/15	200	240	63	52	5340	1324	
		1/10	1/10	150	180	83	70	5780	1422	
		1/12.5	4/49	120	144	104	86	6130	1520	
		1/15	1/15	100	120	124	104	6320	1569	
		1/20	14/275	75	90	166	138	6320	1569	
		1/25	11/280	60	72	208	173	6320	1569	
		1/30	2/59	50	60	249	208	6320	1569	
		1/40	1/40	37.5	45	332	276	6320	1569	
		1/50	1/49	30	36	416	345	6320	1569	
		1/60	1/60	25	30	498	416	6320	1569	
		1/80	7/550	18.8	22.5	631	526	6420	1618	
		1/100	11/1120	15	18	789	658	6420	1618	
		1/120	1/118	12.5	15	947	789	7500	1863	
		* 1/160	7/1100	9.4	11.3	1030	1030	8330	2059	
		* 1/200	11/2240	7.5	9	1030	1030	9020	2256	
		* 1/240	1/236	6.3	7.5	1030	1030	9800	2452	

Motor Power	Frame Size	Reduction Ratio	Actual Reduction Ratio	Output Shaft Speed		Allowable Output Shaft Torque		Allowable Output Shaft O.H.L.	Allowable Output Shaft Thrust Load	Drawings
				r/min		N·m				
				50 Hz	60 Hz	50 Hz	60 Hz	N	N	
3-Phase 2.2kW	55	1/5	1/5	300	360	61	51	4700	1177	P.385
		1/7.5	2/15	200	240	91	76	5340	1324	
		1/10	1/10	150	180	122	102	5780	1422	
		1/12.5	4/49	120	144	152	126	6130	1520	
		1/15	1/15	100	120	182	152	6320	1569	
		1/20	14/275	75	90	244	203	6320	1569	
		1/25	11/280	60	72	305	254	6320	1569	
		1/30	2/59	50	60	366	305	6320	1569	
		1/40	1/40	37.5	45	487	406	6320	1569	
		1/50	1/49	30	36	609	508	6320	1569	
		1/60	1/60	25	30	731	609	6320	1569	
		1/80	7/550	18.8	22.5	926	771	6420	1618	
		* 1/100	11/1120	15	18	1030	964	6420	1618	
		* 1/120	1/118	12.5	15	1030	1030	7500	1863	

Note 1: Please be sure to read the notes on page 370.

FA Type Gearmotors/Gearmotors with Brake <Right Angle Hollow Bore/FAS>

[Notes]

- The values in parentheses ( ) in the drawings are the indications for gearmotors with brake.
- The output shaft speed is the value relative to the synchronous speed of the motor and the reduction ratio.
- The key for the output shaft is not included.
- In the performance table, ▭ indicates that the shaft rotates clockwise when viewed from the flange surface side when the connection is made as shown on page 548 (CW). (Refer to the figure on the right)
- Allowable output shaft O.H.L. is the value at 20 mm from the end of the output shaft.
- The "*" mark indicates a limited torque type. Please make sure to check the allowable output shaft torque in the performance table.

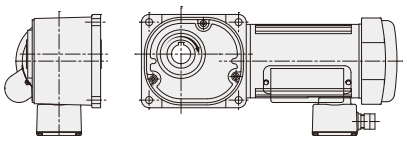

Motor Power	Frame Size	Reduction Ratio	Actual Reduction Ratio	Output Shaft Speed		Allowable Output Shaft Torque		Allowable Output Shaft O.H.L.	Allowable Output Shaft Thrust Load	Drawings
				r/min		N·m				
				50 Hz	60 Hz	50 Hz	60 Hz	N	N	
1-Phase 0.4kW	55	* 1/600	49/28600	2.5	3	1030	891	9800	2452	P.386
		* 1/750	11/8320	2	2.4	1030	1030	9800	2452	
		* 1/900	7/6136	1.7	2	1030	1030	9800	2452	
		* 1/1200	49/57200	1.3	1.5	1030	1030	9800	2452	
		* 1/1500	11/16640	1	1.2	1030	1030	9800	2452	

F Type Gearmotors/Gearmotors with Brake <Right Angle Shaft/FF>

[Notes]

- The values in parentheses ( ) in the drawings are the indications for gearmotors with brake.
- The output shaft speed is the value relative to the synchronous speed of the motor and the reduction ratio.
- In the performance table, ▭ indicates that the L shaft rotates clockwise and the R and T shafts rotate counterclockwise when viewed from the output shaft direction when the connection is made as shown on page 547 (CW). (Refer to the figure on the right)
- Allowable output shaft O.H.L. is the value at the middle of the output shaft.
- The "*" mark indicates a limited torque type. Please make sure to check the allowable output shaft torque in the performance table.

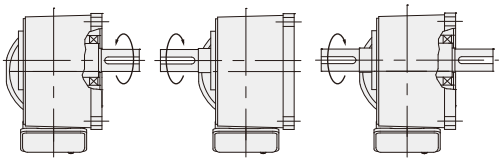

L Shaft R Shaft T Shaft

Motor Power	Frame Size	Reduction Ratio	Actual Reduction Ratio	Output Shaft Speed r/min		Allowable Output Shaft Torque N·m		Allowable Output Shaft O.H.L. N	Drawings
				50 Hz	60 Hz	50 Hz	60 Hz		
0.1 kW	22	1/10	1/10	150	180	5.2	4.3	1520	P.387
		1/12.5	2/25	120	144	6.5	5.4	1620	
		1/15	1/15	100	120	7.7	6.5	1720	
		1/20	1/20	75	90	11	8.6	1910	
		1/25	19/470	60	72	13	11	2060	
		1/30	1/30	50	60	16	13	2160	
		1/40	1/40	37.5	45	21	18	2400	
		1/50	1/50	30	36	25	22	2550	
		1/60	1/60	25	30	31	25	2550	
		1/80	1/80	18.8	22.5	39	32	2550	
		1/100	19/1880	15	18	49	41	2550	
		1/120	1/120	12.5	15	59	49	2550	
		1/160	1/160	9.4	11.3	78	66	2550	
		1/200	1/200	7.5	9	98	81	2550	
		* 1/240	1/240	6.3	7.5	101	98	2550	
0.2 kW	28	1/5	1/5	300	360	5.5	4.6	1470	P.387
		1/7.5	2/15	200	240	8.3	7.0	1670	
		1/10	1/10	150	180	11	9.2	1810	
		1/12.5	19/235	120	144	14	12	1960	
		1/15	1/15	100	120	17	14	2060	
		1/20	1/20	75	90	23	19	2300	
		1/25	1/25	60	72	27	24	2450	
		1/30	1/30	50	60	33	27	2600	
		1/40	1/40	37.5	45	44	37	2790	
		1/50	1/50	30	36	55	46	2990	
		1/60	1/60	25	30	67	55	3090	
		1/80	1/80	18.8	22.5	84	71	3090	
		1/100	19/1880	15	18	105	87	3140	
		1/120	1/120	12.5	15	126	105	3140	
		1/160	1/160	9.4	11.3	169	140	3140	
		* 1/200	1/200	7.5	9	184	175	3140	
		* 1/240	1/240	6.3	7.5	184	184	3140	

Motor Power	Frame Size	Reduction Ratio	Actual Reduction Ratio	Output Shaft Speed r/min		Allowable Output Shaft Torque N·m		Allowable Output Shaft O.H.L.	Drawings
				50 Hz	60 Hz	50 Hz	60 Hz	N	
0.4 kW	32	1/5	1/5	300	360	11	9.2	1760	P.388
		1/7.5	2/15	200	240	17	14	2010	
		1/10	1/10	150	180	23	19	2210	
		1/12.5	19/235	120	144	27	24	2350	
		1/15	1/15	100	120	33	27	2500	
		1/20	1/20	75	90	44	37	2700	
		1/25	1/25	60	72	55	46	2890	
		1/30	1/30	50	60	67	55	3040	
		1/40	1/40	37.5	45	88	74	3280	
		1/50	1/50	30	36	111	92	3330	
		1/60	1/60	25	30	133	111	3330	
		1/80	1/80	18.8	22.5	169	140	3330	
		1/100	19/1880	15	18	211	175	3380	
		1/120	1/120	12.5	15	253	211	3380	
		* 1/160	1/160	9.4	11.3	270	270	3580	
		* 1/200	1/200	7.5	9	270	270	3630	
		* 1/240	1/240	6.3	7.5	270	270	3630	
0.75 kW	40	1/5	1/5	300	360	21	18	2500	P.388
		1/7.5	2/15	200	240	31	25	2840	
		1/10	1/10	150	180	41	34	3140	
		1/12.5	19/235	120	144	52	43	3380	
		1/15	1/15	100	120	63	52	3530	
		1/20	1/20	75	90	83	70	3870	
		1/25	1/25	60	72	104	86	4170	
		1/30	1/30	50	60	124	104	4310	
		1/40	1/40	37.5	45	166	138	4460	
		1/50	1/50	30	36	208	173	4460	
		1/60	1/60	25	30	249	208	4460	
		1/80	1/80	18.8	22.5	316	263	4460	
		1/100	19/1880	15	18	395	328	4460	
		1/120	1/120	12.5	15	473	395	4460	
		* 1/160	1/160	9.4	11.3	554	526	4850	
		* 1/200	1/200	7.5	9	554	554	5190	
		* 1/240	1/240	6.3	7.5	554	554	5190	

1-3. Drawings

FS Type Right Angle Hollow Bore | Shaft Diameter 25 | **Flange** Mounting

The values in parentheses ( ) are the indications for gearmotors with brake.

<Figure 1>

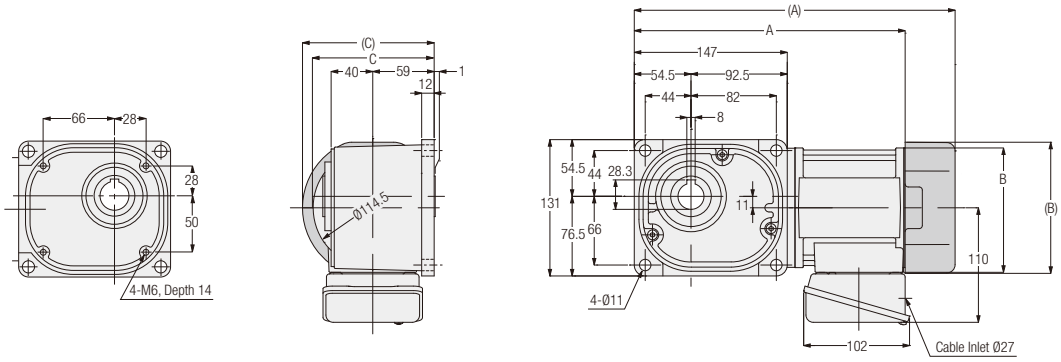

Number of Phases	Power	Part Number	Reduction Ratio	Figure Number	Brake	Approx. Weight (kg)	A	B	C
3-Phase	0.1 kW	FS25N∗∗∗-MM01T◇◇TN	10, 12.5, 15, 20, 25, 30, 40, 50, 60, 80, 100, 120, 160, 200, 240	1	No	7.5	268.5	Ø115	116.5
		FS25N∗∗∗-MM01T◇◇TB◆			Yes	9	308.5	□126	126.5

Note: The reduction ratio will be indicated as ∗∗∗ in the nomenclature. Supply voltage/certification codes are indicated as ◇◇ and brake specification is indicated as ◆.
Note: When the reduction ratio is 12.5, “12” will be indicated as ∗∗∗ in the nomenclature.
Note: Please refer to page 982 for the details of the output shaft dimensions.
Note: Please refer to page 365 for the performance table.

FS Type Right Angle Hollow Bore | Shaft Diameter 25 | **Flange** Mounting

<Figure 1>

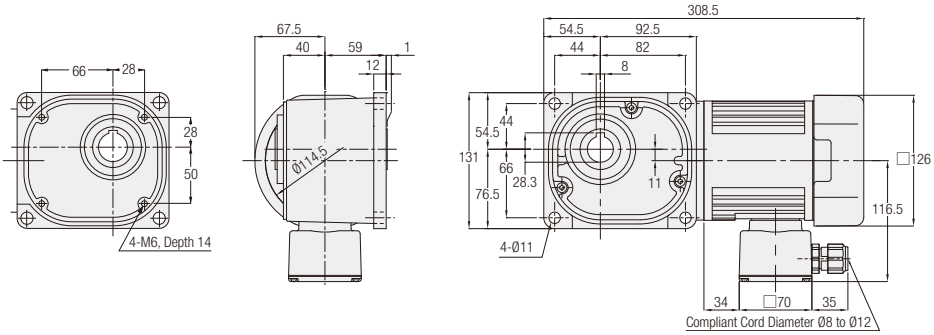

<Figure 2>

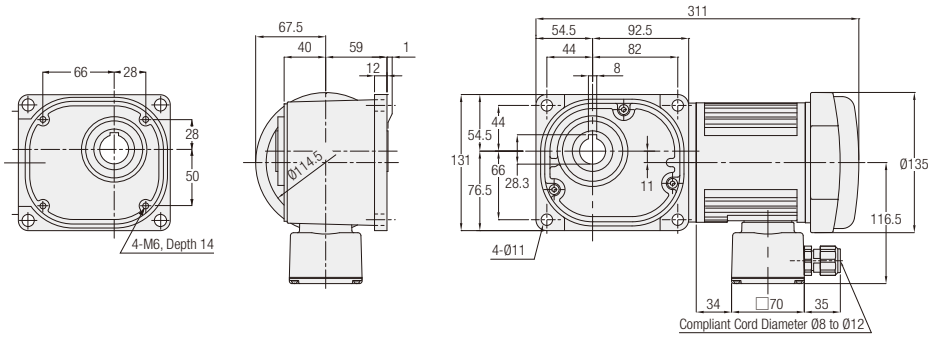

Number of Phases	Power	Part Number	Reduction Ratio	Figure Number	Brake	Approx. Weight (kg)
1-Phase	0.1 kW	FS25N∗∗∗-MM01S◇JAN	10, 12.5, 15, 20, 25, 30, 40, 50, 60, 80, 100, 120, 160, 200, 240	1	No	8
		FS25N∗∗∗-MM01S◇JAB2		2	Yes	8

Note: The reduction ratio will be indicated as ∗∗∗ in the nomenclature. Supply voltage code will be indicated as ◇.
Note: When the reduction ratio is 12.5, “12” will be indicated as ∗∗∗ in the nomenclature.
Note: Please refer to page 982 for the details of the output shaft dimensions.
Note: Please refer to page 368 for the performance table.

FS Type Right Angle Hollow Bore | Shaft Diameter 30 | **Flange** Mounting

The values in parentheses ( ) are the indications for gearmotors with brake.

<Figure 1>

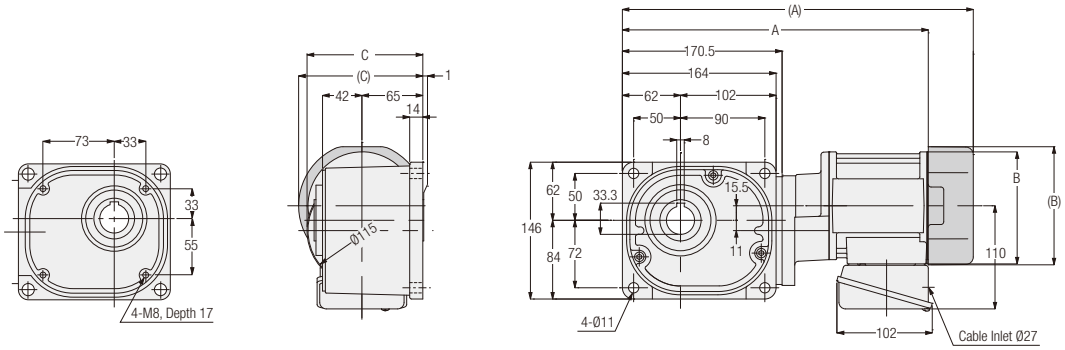

<Figure 2>

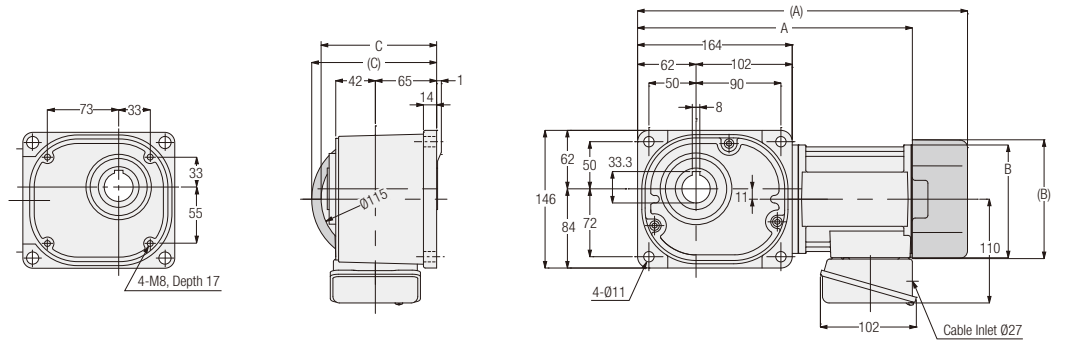

Number of Phases	Power	Part Number	Reduction Ratio	Figure Number	Brake	Approx. Weight (kg)	A	B	C
3-Phase	0.1 kW	FS30N∗∗∗-MM01T◇◇TN	300, 375, 450	1	No	11.5	334.5	Ø115	123
		FS30N∗∗∗-MM01T◇◇TB◆			Yes	13	374.5	□126	132.5
	0.2 kW	FS30N∗∗∗-MM02T◇◇TN	5, 7.5, 10, 12.5, 15, 20, 25, 30, 40, 50, 60, 80, 100, 120, 160, 200, 240	2	No	9.5	299.5	Ø115	123
		FS30N∗∗∗-MM02T◇◇TB◆			Yes	11	350	□126	132.5

Note: The reduction ratio will be indicated as ∗∗∗ in the nomenclature. Supply voltage/certification codes are indicated as ◇◇ and brake specification is indicated as ◆.
Note: When the reduction ratio is 7.5, "7" will be indicated as ∗∗∗ in the nomenclature, and when the reduction ratio is 12.5, "12" will be indicated as ∗∗∗ in the nomenclature.
Note: Please refer to page 982 for the details of the output shaft dimensions.
Note: Please refer to page 365 for the performance table.

FS Type Right Angle Hollow Bore | Shaft Diameter **30** | **Flange** Mounting

<Figure 1>

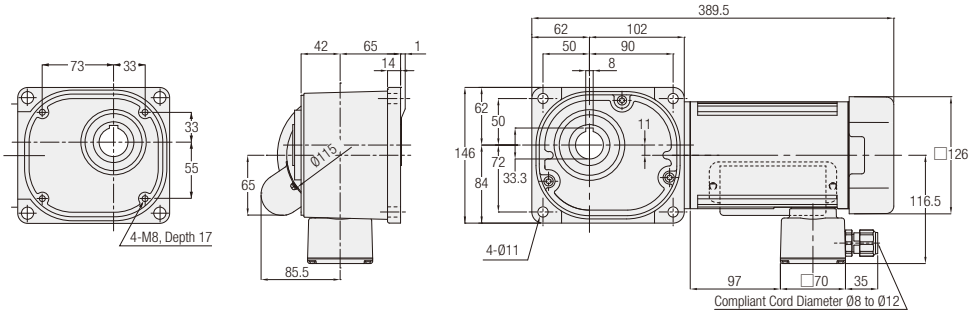

<Figure 2>

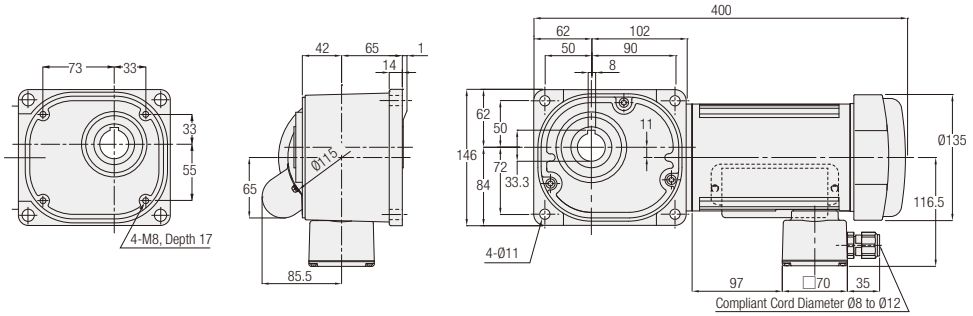

Number of Phases	Power	Part Number	Reduction Ratio	Figure Number	Brake	Approx. Weight (kg)
1-Phase	0.2 kW	FS30N∗∗∗-MM02C◇JAN	5, 7.5, 10, 12.5, 15, 20, 25, 30, 40, 50, 60, 80, 100, 120, 160, 200, 240	1	No	9.5
		FS30N∗∗∗-MM02C◇JAB2		2	Yes	9.5

Note: The reduction ratio will be indicated as ∗∗∗ in the nomenclature. Supply voltage code will be indicated as ◇.
Note: When the reduction ratio is 7.5, “7” will be indicated as ∗∗∗ in the nomenclature, and when the reduction ratio is 12.5, “12” will be indicated as ∗∗∗ in the nomenclature.
Note: Please refer to page 982 for the details of the output shaft dimensions.
Note: Please refer to page 368 for the performance table.

FS Type Right Angle Hollow Bore | Shaft Diameter 35 | **Flange** Mounting

The values in parentheses ( ) are the indications for gearmotors with brake.

<Figure 1>

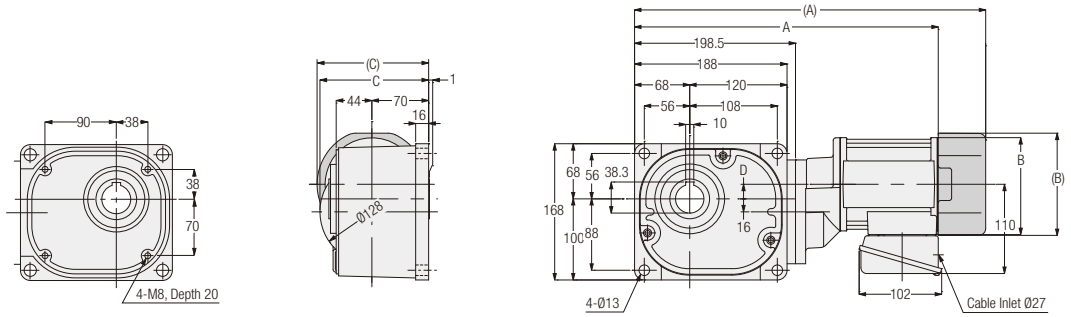

<Figure 2>

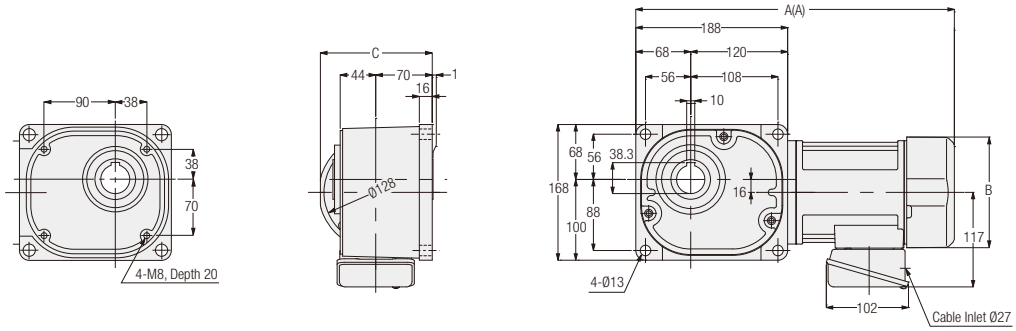

Number of Phases	Power	Part Number	Reduction Ratio	Figure Number	Brake	Approx. Weight (kg)	A	B	C	D
3-Phase	0.1 kW	FS35N∗∗∗-MM01T◇◇TN	600, 750, 900, 1200, 1500	1	No	13.5	362.5	Ø115	134	11.5
		FS35N∗∗∗-MM01T◇◇TB◆			Yes	15	402.5	□126	137.5	11.5
	0.2 kW	FS35N∗∗∗-MM02T◇◇TN	300, 375, 450	1	No	14.5	382.5	Ø115	134	18
		FS35N∗∗∗-MM02T◇◇TB◆			Yes	16	433	□126	137.5	18
	0.4 kW	FS35N∗∗∗-MM04T◇◇TN	5, 7.5, 10, 12.5, 15, 20, 25, 30, 40, 50, 60, 80, 100, 120, 160, 200, 240	2	No	14	374.5	□137	138.5	-
		FS35N∗∗∗-MM04T◇◇TB◆			Yes	16	394.5	□137	138.5	-

Note: The reduction ratio will be indicated as ∗∗∗ in the nomenclature. Supply voltage/certification codes are indicated as ◇◇ and brake specification is indicated as ◆.
Note: When the reduction ratio is 7.5, “7” will be indicated as ∗∗∗ in the nomenclature, and when the reduction ratio is 12.5, “12” will be indicated as ∗∗∗ in the nomenclature.
Note: Please refer to page 982 for the details of the output shaft dimensions.
Note: Please refer to page 365 for the performance table.

FS Type Right Angle Hollow Bore | Shaft Diameter 35 | **Flange** Mounting

The values in parentheses ( ) are the indications for gearmotors with brake.

<Figure 1>

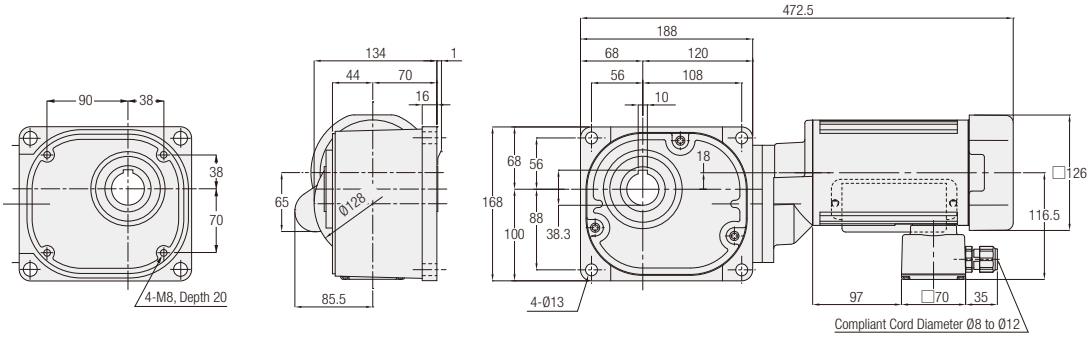

<Figure 2>

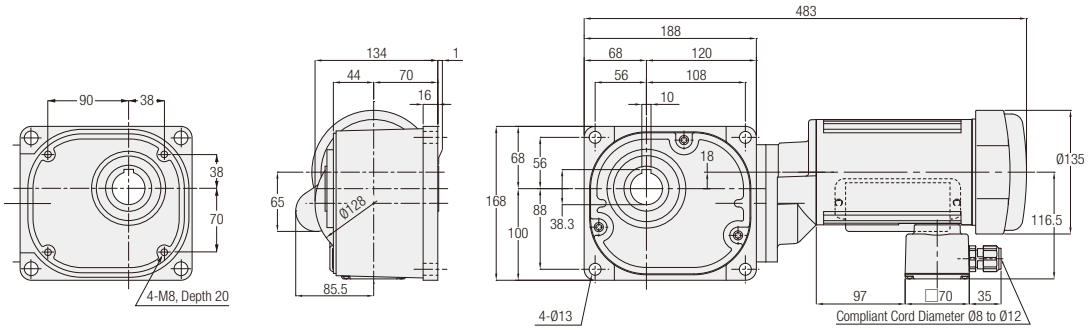

<Figure 3>

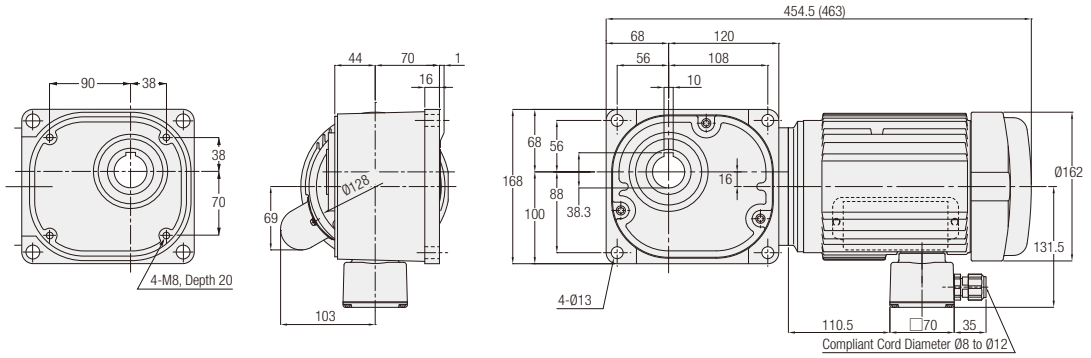

Number of Phases	Power	Part Number	Reduction Ratio	Figure Number	Brake	Approx. Weight (kg)
1-Phase	0.2 kW	FS35N∗∗∗-MM02C◇JAN	300, 375, 450	1	No	16.5
		FS35N∗∗∗-MM02C◇JAB2		2	Yes	16.5
	0.4 kW	FS35N∗∗∗-MM04C◇JAN	5, 7.5, 10, 12.5, 15, 20, 25, 30, 40, 50, 60, 80, 100, 120, 160, 200, 240	3	No	20
		FS35N∗∗∗-MM04C◇JAB2			Yes	20

Note: The reduction ratio will be indicated as ∗∗∗ in the nomenclature. Supply voltage code will be indicated as ◇.
Note: When the reduction ratio is 7.5, “7” will be indicated as ∗∗∗ in the nomenclature, and when the reduction ratio is 12.5, “12” will be indicated as ∗∗∗ in the nomenclature.
Note: Please refer to page 982 for the details of the output shaft dimensions.
Note: Please refer to page 368 for the performance table.

FS Type Right Angle Hollow Bore | Shaft Diameter 45 | **Flange** Mounting

The values in parentheses ( ) are the indications for gearmotors with brake.

<Figure 1>

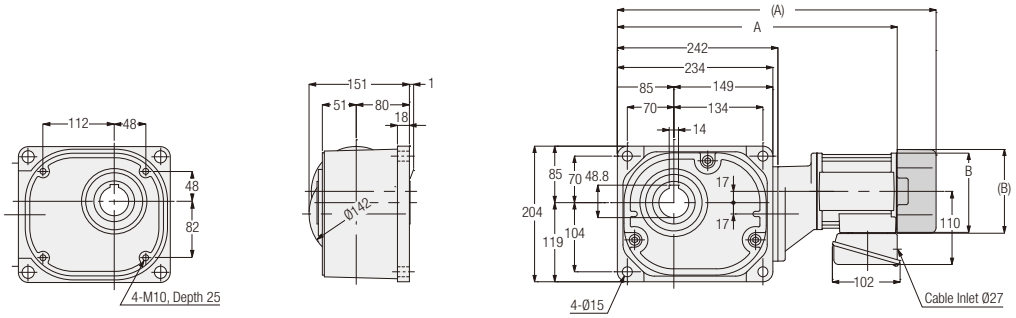

<Figure 2>

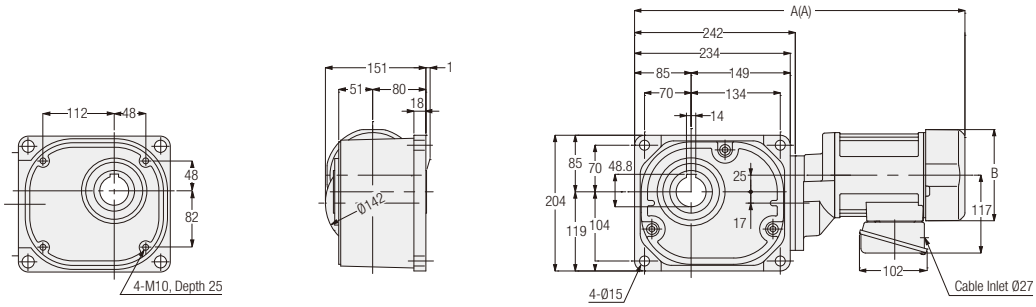

<Figure 3>

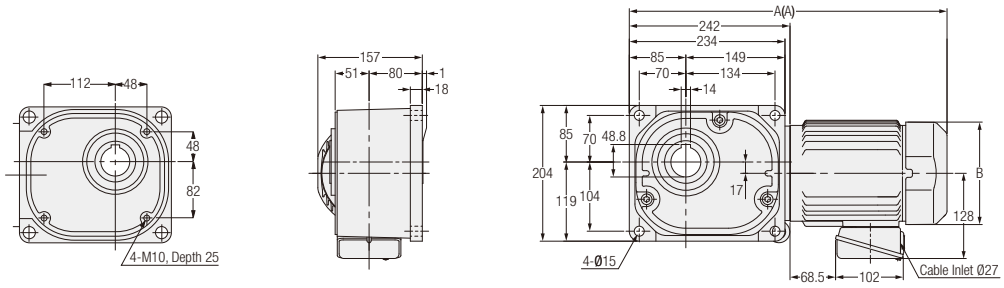

Number of Phases	Power	Part Number	Reduction Ratio	Figure Number	Brake	Approx. Weight (kg)	A	B
3-Phase	0.2 kW	FS45N∗∗∗-MM02T◇◇TN	600, 750, 900, 1200, 1500	1	No	20	429.5	Ø115
		FS45N∗∗∗-MM02T◇◇TB◆			Yes	21.5	480	□126
	0.4 kW	FS45N∗∗∗-MM04T◇◇TN	300, 375, 450	2	No	22.5	477	□137
		FS45N∗∗∗-MM04T◇◇TB◆			Yes	24	497	□137
	0.75 kW	FS45N∗∗∗-MR08T◇◇TN	5, 7.5, 10, 12.5, 15, 20, 25, 30, 40, 50, 60, 80, 100, 120, 160, 200, 240	3	No	27.5	459	□154
		FS45N∗∗∗-MR08T◇◇TB◆			Yes	30.5	478	□154

Note: The reduction ratio will be indicated as ∗∗∗ in the nomenclature. Supply voltage/certification codes are indicated as ◇◇ and brake specification is indicated as ◆.
Note: When the reduction ratio is 7.5, "7" will be indicated as ∗∗∗ in the nomenclature, and when the reduction ratio is 12.5, "12" will be indicated as ∗∗∗ in the nomenclature.
Note: Please refer to page 982 for the details of the output shaft dimensions.
Note: Please refer to page 365 for the performance table.

FS Type Right Angle Hollow Bore | Shaft Diameter **45** | **Flange** Mounting

The values in parentheses ( ) are the indications for gearmotors with brake.

<Figure 1>

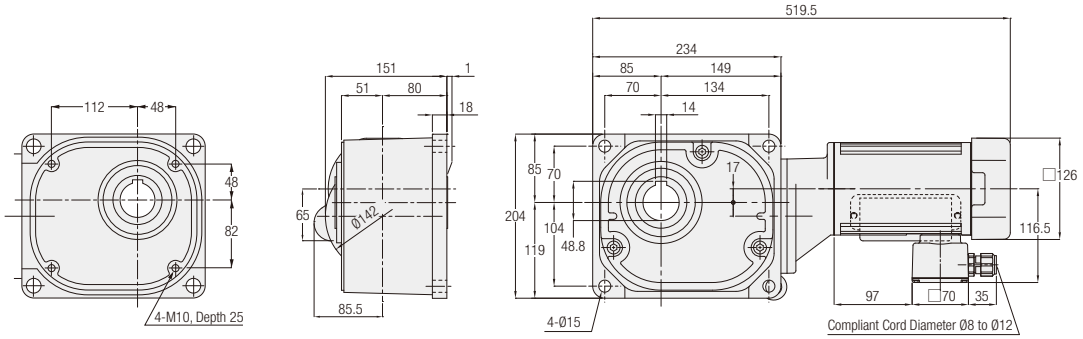

<Figure 2>

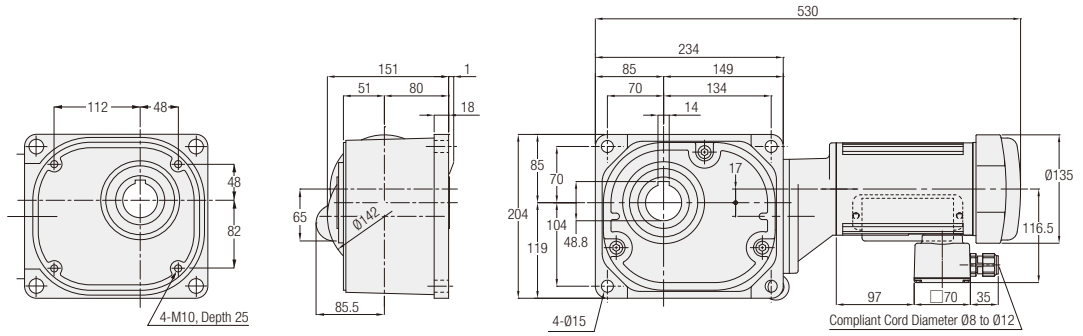

<Figure 3>

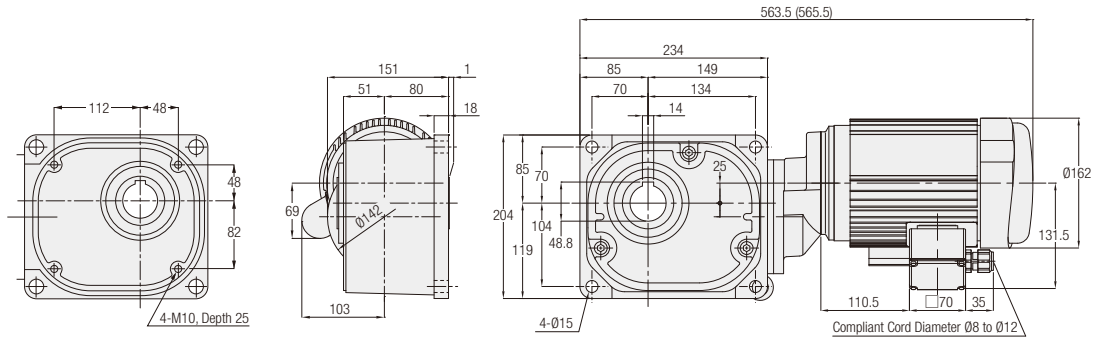

Number of Phases	Power	Part Number	Reduction Ratio	Figure Number	Brake	Approx. Weight (kg)
1-Phase	0.2 kW	FS45N∗∗∗-MM02C◇JAN	600, 750, 900, 1200, 1500	1	No	22
		FS45N∗∗∗-MM02C◇JAB2		2	Yes	22
	0.4 kW	FS45N∗∗∗-MM04C◇JAN	300, 375, 450	3	No	28
		FS45N∗∗∗-MM04C◇JAB2			Yes	28

Note: The reduction ratio will be indicated as ∗∗∗ in the nomenclature. Supply voltage code will be indicated as ◇.
Note: Please refer to page 982 for the details of the output shaft dimensions.
Note: Please refer to page 368 for the performance table.

FS Type Right Angle Hollow Bore | Shaft Diameter 55 | **Flange** Mounting

The values in parentheses ( ) are the indications for gearmotors with brake.

<Figure 1>

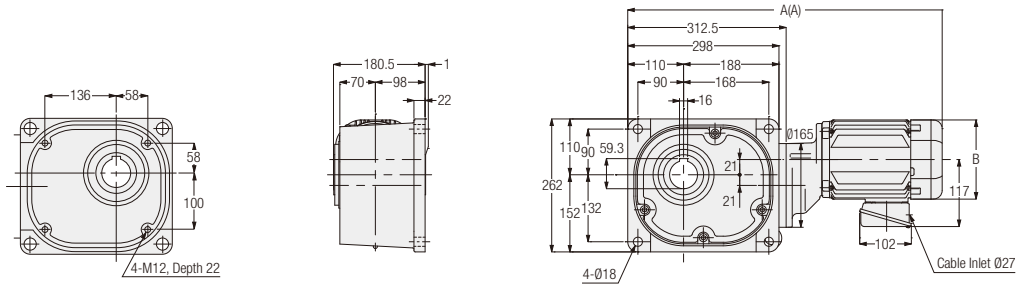

<Figure 2>

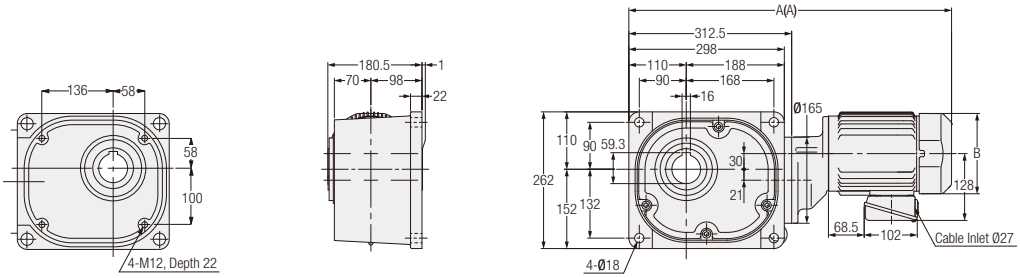

<Figure 3>

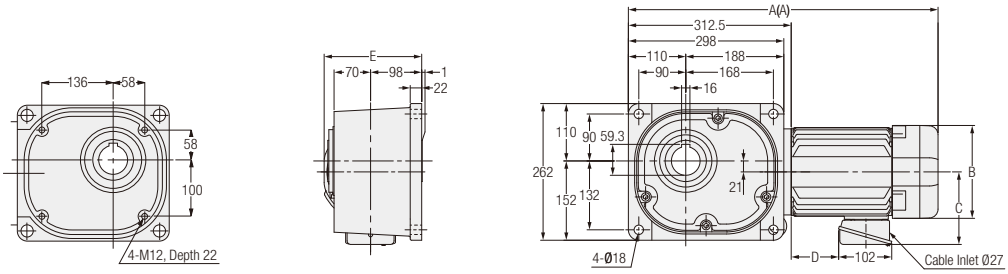

Number of Phases	Power	Part Number	Reduction Ratio	Figure Number	Brake	Approx. Weight (kg)	A	B	C	D	E
3-Phase	0.4 kW	FS55N∗∗∗-MM04T◇◇TN	600, 750, 900, 1200, 1500	1	No	60.5	547.5	□137	-	-	-
		FS55N∗∗∗-MM04T◇◇TB◆			Yes	62	567.5	□137	-	-	-
	0.75 kW	FS55N∗∗∗-MR08T◇◇TN	300, 375, 450	2	No	68.5	600	□154	-	-	-
		FS55N∗∗∗-MR08T◇◇TB◆			Yes	71	619	□154	-	-	-
	1.5 kW	FS55N∗∗∗-MR15T◇◇TN	5, 7.5, 10, 12.5, 15, 20, 25, 30, 40, 50, 60, 80, 100, 120, 160, 200, 240	3	No	74.5	565	□178	139	91	187
		FS55N∗∗∗-MR15T◇◇TB◆			Yes	77.5	594	□178	139	91	187
	2.2 kW	FS55N∗∗∗-MR22T◇◇TN	5, 7.5, 10, 12.5, 15, 20, 25, 30, 40, 50, 60, 80, 100, 120	3	No	85	614.5	□192	149	140	194
		FS55N∗∗∗-MR22T◇◇TB◆			Yes	88	643.5	□192	149	140	194

Note: The reduction ratio will be indicated as ∗∗∗ in the nomenclature. Supply voltage/certification codes are indicated as ◇◇ and brake specification is indicated as ◆.
Note: When the reduction ratio is 7.5, “7” will be indicated as ∗∗∗ in the nomenclature, and when the reduction ratio is 12.5, “12” will be indicated as ∗∗∗ in the nomenclature.
Note: Please refer to page 982 for the details of the output shaft dimensions.
Note: Please refer to page 366 for the performance table.

FS Type Right Angle Hollow Bore | Shaft Diameter 55 | **Flange** Mounting

The values in parentheses ( ) are the indications for gearmotors with brake.

<Figure 1>

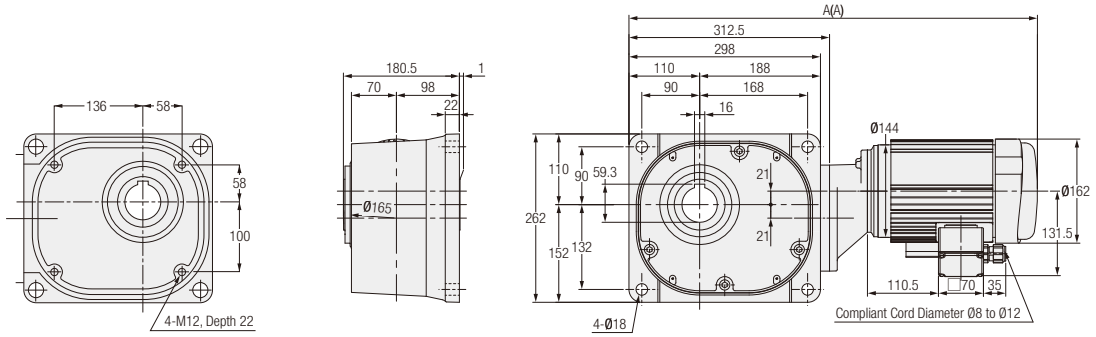

Number of Phases	Power	Part Number	Reduction Ratio	Figure Number	Brake	Approx. Weight (kg)	A
1-Phase	0.4 kW	FS55N∗∗∗-MM04C◇JAN	600, 750, 900, 1200, 1500	1	No	66	627.5
		FS55N∗∗∗-MM04C◇JAB2			Yes	66	636

Note: The reduction ratio will be indicated as ∗∗∗ in the nomenclature. Supply voltage code will be indicated as ◇.
Note: Please refer to page 982 for the details of the output shaft dimensions.
Note: Please refer to page 369 for the performance table.

FAS Type Right Angle Hollow Bore | Shaft Diameter 55 | **Flange** Mounting

The values in parentheses ( ) are the indications for gearmotors with brake.

<Figure 1>

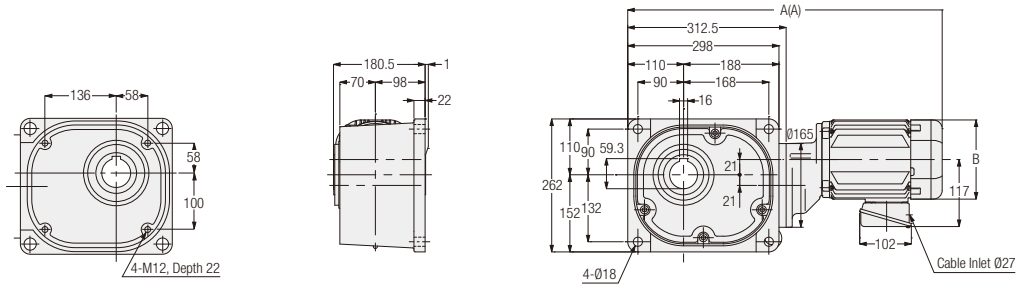

<Figure 2>

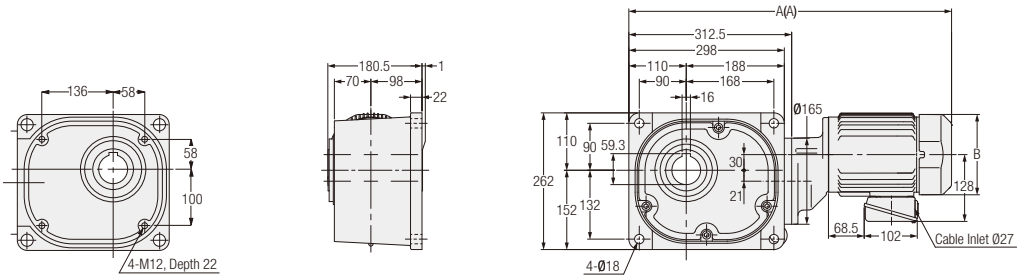

<Figure 3>

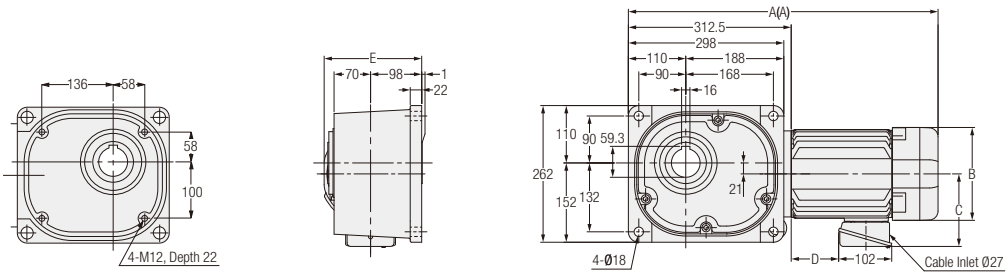

Number of Phases	Power	Part Number	Reduction Ratio	Figure Number	Brake	Approx. Weight (kg)	A	B	C	D	E
3-Phase	0.4kW	FAS55N∗∗∗-MM04T◇◇TN	600, 750, 900, 1200, 1500	1	No	42.7	547.5	□137	-	-	-
		FAS55N∗∗∗-MM04T◇◇TB◆			Yes	44.2	567.5	□137	-	-	-
	0.75kW	FAS55N∗∗∗-MR08T◇◇TN	300, 375, 450	2	No	50.7	600	□154	-	-	-
		FAS55N∗∗∗-MR08T◇◇TB◆			Yes	53.2	619	□154	-	-	-
	1.5kW	FAS55N∗∗∗-MR15T◇◇TN	5, 7.5, 10, 12.5, 15, 20, 25, 30, 40, 50, 60, 80, 100, 120, 160, 200, 240	3	No	56.7	565	□178	139	91	187
		FAS55N∗∗∗-MR15T◇◇TB◆			Yes	59.7	594	□178	139	91	187
	2.2kW	FAS55N∗∗∗-MR22T◇◇TN	5, 7.5, 10, 12.5, 15, 20, 25, 30, 40, 50, 60, 80, 100, 120	3	No	67.2	614.5	□192	149	140	194
		FAS55N∗∗∗-MR22T◇◇TB◆			Yes	70.2	643.5	□192	149	140	194

Note: The reduction ratio will be indicated as ∗∗∗ in the nomenclature. Supply voltage/certification codes are indicated as ◇◇ and brake specification is indicated as ◆.
Note: When the reduction ratio is 7.5, “7” will be indicated as ∗∗∗ in the nomenclature, and when the reduction ratio is 12.5, “12” will be indicated as ∗∗∗ in the nomenclature.
Note: Please refer to page 982 for the details of the output shaft dimensions.
Note: Please refer to page 370 for the performance table.

FAS Type Right Angle Hollow Bore | Shaft Diameter 55 | **Flange** Mounting

The values in parentheses ( ) are the indications for gearmotors with brake.

<Figure 1>

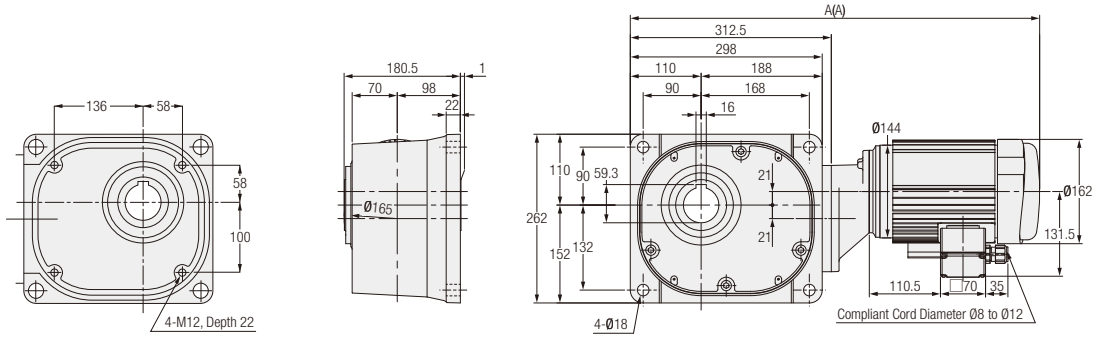

Number of Phases	Power	Part Number	Reduction Ratio	Figure Number	Brake	Approx. Weight (kg)	A
1-Phase	0.4kW	FAS55N∗∗∗-MM04C◇JAN	600, 750, 900, 1200, 1500	1	No	48.2	627.5
		FAS55N∗∗∗-MM04C◇JAB2			Yes	48.2	636

Note: The reduction ratio will be indicated as ∗∗∗ in the nomenclature. Supply voltage code will be indicated as ◇.
Note: Please refer to page 982 for the details of the output shaft dimensions.
Note: Please refer to page 372 for the performance table.

FF Type Right Angle Shaft | Shaft Diameter **22** | **Flange** Mounting

The values in parentheses ( ) are the indications for gearmotors with brake.

<Figure 1>

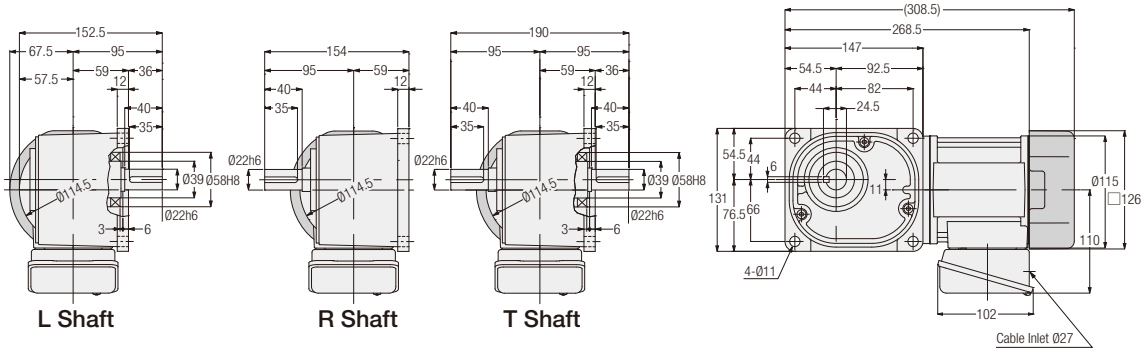

Number of Phases	Power	Part Number	Reduction Ratio	Figure Number	Brake	Approx. Weight (kg)
3-Phase	0.1 kW	FF22#∗∗∗-MM01T◇◇TN	10, 12.5, 15, 20, 25, 30, 40, 50, 60, 80, 100, 120, 160, 200, 240	1	No	8.5
		FF22#∗∗∗-MM01T◇◇TB◆			Yes	10

Note: A shaft arrangement (L, R, T) will be indicated as # in the nomenclature. In addition, a reduction ratio is indicated as ∗∗∗. Supply voltage/certification codes are indicated as ◇◇ and brake specification is indicated as ◆.
Note: When the reduction ratio is 12.5, "12" will be indicated as ∗∗∗ in the nomenclature.
Note: Please refer to page 373 for the performance table.

FF Type Right Angle Shaft | Shaft Diameter **28** | **Flange** Mounting

<Figure 2>

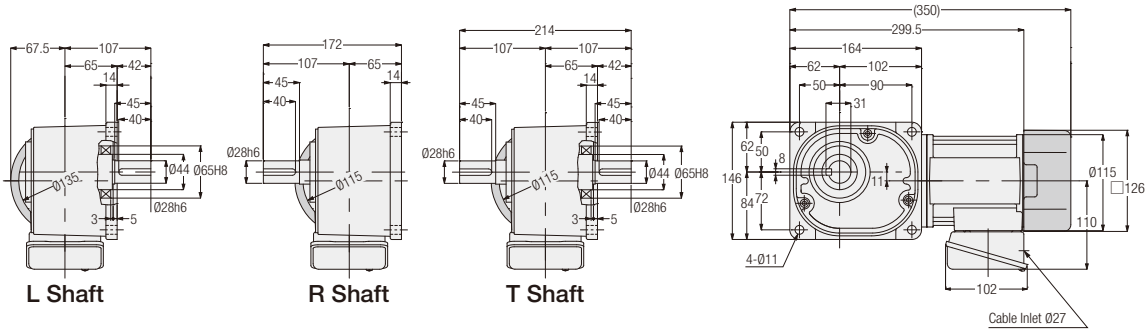

Number of Phases	Power	Part Number	Reduction Ratio	Figure Number	Brake	Approx. Weight (kg)
3-Phase	0.2 kW	FF28#∗∗∗-MM02T◇◇TN	5, 7.5, 10, 12.5, 15, 20, 25, 30, 40, 50, 60, 80, 100, 120, 160, 200, 240	2	No	10.5
		FF28#∗∗∗-MM02T◇◇TB◆			Yes	12

Note: A shaft arrangement (L, R, T) will be indicated as # in the nomenclature. In addition, a reduction ratio is indicated as ∗∗∗. Supply voltage/certification codes are indicated as ◇◇ and brake specification is indicated as ◆.
Note: When the reduction ratio is 7.5, "7" will be indicated as ∗∗∗ in the nomenclature, and when the reduction ratio is 12.5, "12" will be indicated as ∗∗∗ in the nomenclature.
Note: Please refer to page 373 for the performance table.

FF Type Right Angle Shaft | Shaft Diameter 32 | Flange Mounting

The values in parentheses ( ) are the indications for gearmotors with brake.

<Figure 1>

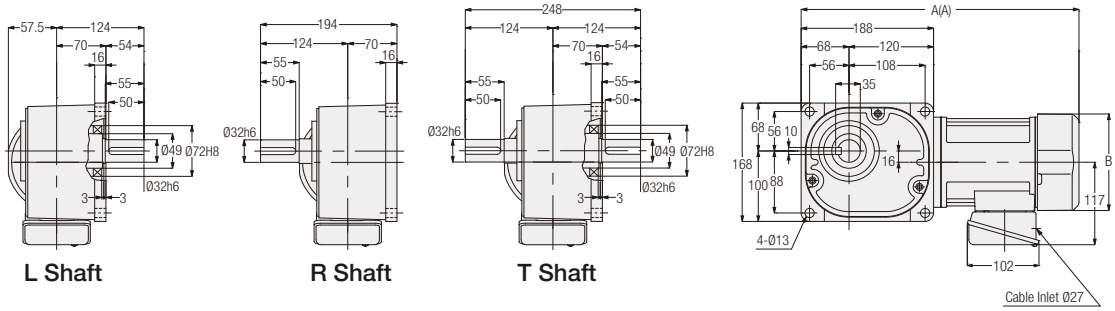

Number of Phases	Power	Part Number	Reduction Ratio	Figure Number	Brake	Approx. Weight (kg)	A	B
3-Phase	0.4 kW	FF32#∗∗∗-MM04T◇◇TN	5, 7.5, 10, 12.5, 15, 20, 25, 30, 40, 50, 60, 80, 100, 120, 160, 200, 240	1	No	16	374.5	□137
		FF32#∗∗∗-MM04T◇◇TB◆			Yes	18	394.5	□137

Note: A shaft arrangement (L, R, T) will be indicated as # in the nomenclature. In addition, a reduction ratio is indicated as ∗∗∗. Supply voltage/certification codes are indicated as ◇◇ and brake specification is indicated as ◆.
Note: When the reduction ratio is 7.5, “7” will be indicated as ∗∗∗ in the nomenclature, and when the reduction ratio is 12.5, “12” will be indicated as ∗∗∗ in the nomenclature.
Note: Please refer to page 374 for the performance table.

FF Type Right Angle Shaft | Shaft Diameter 40 | Flange Mounting

<Figure 2>

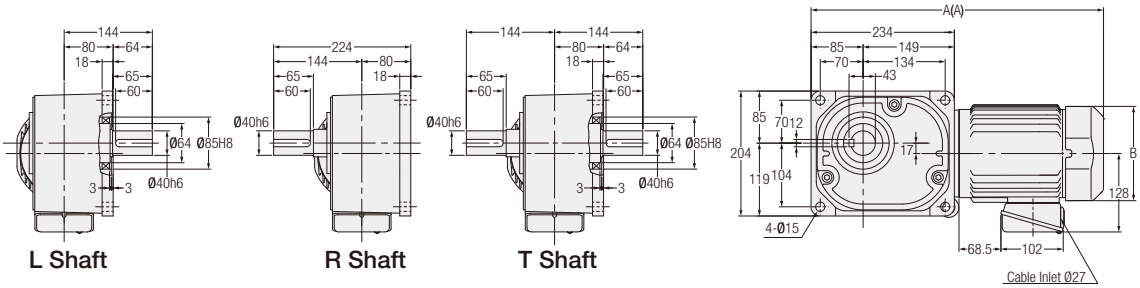

Number of Phases	Power	Part Number	Reduction Ratio	Figure Number	Brake	Approx. Weight (kg)	A	B
3-Phase	0.75 kW	FF40#∗∗∗-MR08T◇◇TN	5, 7.5, 10, 12.5, 15, 20, 25, 30, 40, 50, 60, 80, 100, 120, 160, 200, 240	2	No	31.5	459	□154
		FF40#∗∗∗-MR08T◇◇TB◆			Yes	34.5	478	□154

Note: A shaft arrangement (L, R, T) will be indicated as # in the nomenclature. In addition, a reduction ratio is indicated as ∗∗∗. Supply voltage/certification codes are indicated as ◇◇ and brake specification is indicated as ◆.
Note: When the reduction ratio is 7.5, “7” will be indicated as ∗∗∗ in the nomenclature, and when the reduction ratio is 12.5, “12” will be indicated as ∗∗∗ in the nomenclature
Note: Please refer to page 374 for the performance table.

MEMO

2. IP65 Gearmotors
IP65 Gearmotors with Brake

2-1. Motor Characteristics Table

F Type 3-Phase Standard Voltage <Right Angle Hollow Bore/FS>

Series	Power	Power Supply/ Certification Codes	Voltage (V)	Frequency (Hz)	Rated Current (A)	Startup Current (A)	Rated Speed (r/min)
MID	0.1kW	NN	200/200/220	50/60/60	0.61/0.54/0.54	2.39/2.27/2.52	1410/1690/1710
		WN	380/400/400/440	50/50/60/60	0.31/0.31/0.28/0.28	1.12/1.18/1.12/1.22	1400/1410/1690/1720
		KN	220/380	60/60	0.52/0.30	1.90/1.10	1680/1680
		CN	220/230/380	50/50/50	0.55/0.54/0.31	1.94/2.03/1.12	1400/1410/1400
		DN	220/220/380/380	50/60/50/60	0.55/0.52/0.31/0.30	1.94/1.90/1.12/1.10	1400/1680/1400/1680
		EN	415/440/480	50/50/60	0.30/0.29/0.26	1.06/1.12/1.17	1390/1420/1720
		AN	208/230/460/400	60/60/60/50	0.54/0.57/0.29/0.31	2.35/2.62/1.26/1.21	1690/1730/1730/1410
		MA	575	60	0.20	0.87	1700
	0.2 kW IE2	NN	200/200/220	50/60/60	1.1/1.0/1.0	4.70/4.35/4.85	1400/1680/1700
		WN	380/400/400/440	50/50/60/60	0.56/0.56/0.50/0.50	2.29/2.38/2.29/2.48	1390/1400/1680/1710
		KN	220/380	60/60	0.93/0.52	3.70/2.20	1680/1680
		CN	220/230/380	50/50/50	0.99/0.98/0.56	3.97/4.15/2.29	1400/1410/1390
		DN	220/220/380/380	50/60/50/60	0.99/0.93/0.56/0.52	3.97/3.70/2.29/2.20	1400/1680/1390/1680
		EN	415/440/480	50/50/60	0.50/0.50/0.45	1.75/1.86/2.00	1370/1400/1700
		AN	208/230/460/400	60/60/60/50	1.0/1.0/0.50/0.56	4.78/5.16/2.56/2.44	1680/1720/1720/1400
		MA	575	60	0.40	1.78	1710
	0.4 kW IE2	NN	200/200/220	50/60/60	2.1/1.8/1.8	9.60/8.54/9.21	1400/1680/1700
		WN	380/400/400/440	50/50/60/60	1.0/1.0/0.9/0.9	4.43/4.64/4.24/4.85	1390/1400/1680/1710
		KN	220/380	60/60	1.7/1.0	7.10/4.09	1670/1670
		CN	220/230/380	50/50/50	1.8/1.8/1.0	7.63/8.04/4.43	1390/1400/1390
		DN	220/220/380/380	50/60/50/60	1.8/1.7/1.0/1.0	7.63/7.10/4.43/4.09	1390/1670/1390/1670
		EN	415/440/480	50/50/60	0.96/0.95/0.82	4.45/4.56/4.52	1390/1410/1680
		AN	208/230/460/400	60/60/60/50	1.8/1.8/0.9/1.0	9.21/9.82/5.06/4.62	1680/1720/1720/1400
		MA	575	60	0.68	3.94	1700
	0.75 kW IE3	NN	200/200/220	50/60/60	3.5/3.2/3.1	21.8/19.0/21.1	1450/1740/1750
		WN	380/400/400/440	50/50/60/60	1.73/1.72/1.58/1.54	10.2/10.8/9.8/10.7	1440/1450/1740/1750
		KN	220/380	60/60	2.9/1.7	16.9/9.8	1740/1740
		CN	220/230/380	50/50/50	3.0/3.0/1.7	17.8/18.7/10.3	1450/1450/1440
		DN	220/220/380/380	50/60/50/60	3.1/2.9/1.8/1.7	19.3/16.9/11.2/9.8	1450/1740/1450/1740
		EN	415/440/480	50/50/60	1.54/1.52/1.36	8.6/9.3/9.0	1440/1450/1750
		UN	230/460/400	60/60/50	3.1/1.5/1.7	22.3/11.2/10.8	1760/1760/1450
		MA	575	60	1.16	7.2	1750
	1.5 kW IE3	NN	200/200/220	50/60/60	6.7/6.1/5.9	45.6/40.3/45.1	1450/1740/1760
		WN	380/400/400/440	50/50/60/60	3.4/3.4/3.1/3.0	21.9/23.2/20.4/22.8	1450/1450/1750/1760
		KN	220/380	60/60	5.9/3.4	45.1/25.8	1760/1760
		CN	220/230/380	50/50/50	5.9/5.9/3.4	38.5/40.4/22.1	1450/1450/1450
		EN	415/440/480	50/50/60	3.1/3.1/2.8	20.8/22.2/21.2	1450/1460/1760
		UN	230/460/400	60/60/50	5.9/2.9/3.3	44.9/22.6/23.2	1760/1760/1450
		MA	575	60	2.2	17.0	1760
	2.2 kW IE3	NN	200/200/220	50/60/60	9.3/8.6/8.2	70.3/56.9/63.7	1470/1760/1770
		WN	380/400/400/440	50/50/60/60	4.5/4.4/4.2/3.9	30.0/32.0/25.0/28.0	1440/1450/1740/1750
		KN	220/380	60/60	8.3/4.8	65.0/38.0	1770/1770
		CN	220/230/380	50/50/50	7.9/7.7/4.5	52.0/54.3/30.0	1460/1470/1440
		EN	415/440/480	50/50/60	4.3/4.3/3.8	33.1/35.5/29.8	1460/1470/1770
		UN	230/460/400	60/60/50	7.9/4.0/4.5	65.2/34.8/36.3	1770/1770/1470
		MA	575	60	3.3	24.4	1760

The rated current in the motor characteristics table is the current data for the motor operating without a gearbox.
With regard to gearmotors with a brake, it is necessary to consider the current value flowing through the brake as needed.
For more details, please contact your nearest Sales Office or the CS Center.

FA Type 3-Phase Standard Voltage <Right Angle Hollow Bore/FAS>

Series	Power	Power Supply/ Certification Codes	Voltage (V)	Frequency (Hz)	Rated Current (A)	Startup Current (A)	Rated Speed (r/min)
MID	0.4 kW IE2	NN	200/200/220	50/60/60	2.1/1.8/1.8	9.60/8.54/9.21	1400/1680/1700
		WN	380/400/400/440	50/50/60/60	1.0/1.0/0.9/0.9	4.43/4.64/4.24/4.85	1390/1400/1680/1710
		KN	220/380	60/60	1.7/1.0	7.10/4.09	1670/1670
		CN	220/230/380	50/50/50	1.8/1.8/1.0	7.63/8.04/4.43	1390/1400/1390
		DN	220/220/380/380	50/60/50/60	1.8/1.7/1.0/1.0	7.63/7.10/4.43/4.09	1390/1670/1390/1670
		EN	415/440/480	50/50/60	0.96/0.95/0.82	4.45/4.56/4.52	1390/1410/1680
		AN	208/230/460/400	60/60/60/50	1.8/1.8/0.9/1.0	9.21/9.82/5.06/4.62	1680/1720/1720/1400
		MA	575	60	0.68	3.94	1700
	0.75 kW IE3	NN	200/200/220	50/60/60	3.5/3.2/3.1	21.8/19.0/21.1	1450/1740/1750
		WN	380/400/400/440	50/50/60/60	1.73/1.72/1.58/1.54	10.2/10.8/9.8/10.7	1440/1450/1740/1750
		KN	220/380	60/60	2.9/1.7	16.9/9.8	1740/1740
		CN	220/230/380	50/50/50	3.0/3.0/1.7	17.8/18.7/10.3	1450/1450/1440
		DN	220/220/380/380	50/60/50/60	3.1/2.9/1.8/1.7	19.3/16.9/11.2/9.8	1450/1740/1450/1740
		EN	415/440/480	50/50/60	1.54/1.52/1.36	8.6/9.3/9.0	1440/1450/1750
		UN	230/460/400	60/60/50	3.1/1.5/1.7	22.3/11.2/10.8	1760/1760/1450
		MA	575	60	1.16	7.2	1750
	1.5 kW IE3	NN	200/200/220	50/60/60	6.7/6.1/5.9	45.6/40.3/45.1	1450/1740/1760
		WN	380/400/400/440	50/50/60/60	3.4/3.4/3.1/3.0	21.9/23.2/20.4/22.8	1450/1450/1750/1760
		KN	220/380	60/60	5.9/3.4	45.1/25.8	1760/1760
		CN	220/230/380	50/50/50	5.9/5.9/3.4	38.5/40.4/22.1	1450/1450/1450
		EN	415/440/480	50/50/60	3.1/3.1/2.8	20.8/22.2/21.2	1450/1460/1760
		UN	230/460/400	60/60/50	5.9/2.9/3.3	44.9/22.6/23.2	1760/1760/1450
		MA	575	60	2.2	17.0	1760
	2.2 kW IE3	NN	200/200/220	50/60/60	9.3/8.6/8.2	70.3/56.9/63.7	1470/1760/1770
		WN	380/400/400/440	50/50/60/60	4.5/4.4/4.2/3.9	30.0/32.0/25.0/28.0	1440/1450/1740/1750
		KN	220/380	60/60	8.3/4.8	65.0/38.0	1770/1770
		CN	220/230/380	50/50/50	7.9/7.7/4.5	52.0/54.3/30.0	1460/1470/1440
		EN	415/440/480	50/50/60	4.3/4.3/3.8	33.1/35.5/29.8	1460/1470/1770
		UN	230/460/400	60/60/50	7.9/4.0/4.5	65.2/34.8/36.3	1770/1770/1470
		MA	575	60	3.3	24.4	1760

The rated current in the motor characteristics table is the current data for the motor operating without a gearbox.
With regard to gearmotors with a brake, it is necessary to consider the current value flowing through the brake as needed.
For more details, please contact your nearest Sales Office or the CS Center.

2-2. Performance Table

F Type IP65 Gearmotors / IP65 Gearmotors with Brake <Right Angle Hollow Bore/FS>

[Notes]

- The values in parentheses ( ) in the drawings are the indications for gearmotors with brake.
- The output shaft speed is the value relative to the synchronous speed of the motor and the reduction ratio.
- The key for the output shaft is not included.
- In the performance table, ▭ indicates that the shaft rotates clockwise when viewed from the flange surface side when the connection is made as shown on page 547 (CW). (Refer to the figure on the right)
- Allowable output shaft O.H.L. is the value at 20 mm from the end of the output shaft.
- The "*" mark indicates a limited torque type. Please make sure to check the allowable output shaft torque in the performance table.

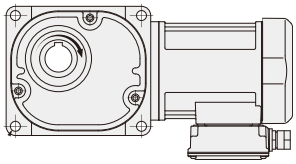

Motor Power	Frame Size	Reduction Ratio	Actual Reduction Ratio	Output Shaft Speed r/min 50 Hz	Output Shaft Speed r/min 60 Hz	Allowable Output Shaft Torque N·m 50 Hz	Allowable Output Shaft Torque N·m 60 Hz	Allowable Output Shaft O.H.L. N	Allowable Output Shaft Thrust Load N	Drawings
3-Phase 0.1 kW	25	1/10	1/10	150	180	5.2	4.3	1520	382	P.397
		1/12.5	2/25	120	144	6.5	5.4	1620	402	
		1/15	1/15	100	120	7.7	6.5	1720	431	
		1/20	1/20	75	90	11	8.6	1860	471	
		1/25	19/470	60	72	13	11	2010	500	
		1/30	1/30	50	60	16	13	2110	530	
		1/40	1/40	37.5	45	21	18	2300	579	
		1/50	1/50	30	36	25	22	2450	618	
		1/60	1/60	25	30	31	25	2550	637	
		1/80	1/80	18.8	22.5	39	32	2550	637	
		1/100	19/1880	15	18	49	41	2550	637	
		1/120	1/120	12.5	15	59	49	2550	637	
		1/160	1/160	9.4	11.3	78	66	2550	637	
		1/200	1/200	7.5	9	98	81	2550	637	
		* 1/240	1/240	6.3	7.5	101	98	2550	637	
	30	1/300	7/2040	5	6	131	110	3140	785	P.398
		1/375	133/47940	4	4.8	165	137	3140	785	
		1/450	7/3060	3.3	4	198	165	3140	785	
	35	1/600	7/4240	2.5	3	248	207	3630	912	P.399
		1/750	133/99640	2	2.4	311	259	3630	912	
		1/900	7/6360	1.7	2	372	311	3630	912	
		* 1/1200	7/8480	1.3	1.5	372	372	3630	912	
		* 1/1500	7/10600	1	1.2	372	372	3630	912	
3-Phase 0.2 kW	30	1/5	1/5	300	360	5.5	4.6	1520	382	P.398
		1/7.5	2/15	200	240	8.3	7	1760	441	
		1/10	1/10	150	180	11	9.2	1910	481	
		1/12.5	19/235	120	144	14	12	2060	520	
		1/15	1/15	100	120	17	14	2160	539	
		1/20	1/20	75	90	23	19	2400	598	
		1/25	1/25	60	72	27	24	2550	637	
		1/30	1/30	50	60	33	27	2650	667	
		1/40	1/40	37.5	45	44	37	2840	716	
		1/50	1/50	30	36	55	46	2990	745	
		1/60	1/60	25	30	67	55	3090	775	
		1/80	1/80	18.8	22.5	84	71	3090	775	
		1/100	19/1880	15	18	105	87	3140	785	
		1/120	1/120	12.5	15	126	105	3140	785	
		1/160	1/160	9.4	11.3	169	140	3140	785	
		* 1/200	1/200	7.5	9	184	175	3140	785	
		* 1/240	1/240	6.3	7.5	184	184	3140	785	
	35	1/300	7/2120	5	6	282	235	3630	912	P.399
		1/375	133/49820	4	4.8	353	294	3630	912	
		* 1/450	7/3180	3.3	4	372	353	3630	912	
	45	1/600	7/4240	2.5	3	534	446	5190	1275	P.400
		1/750	133/99640	2	2.4	668	557	5190	1275	
		* 1/900	7/6360	1.7	2	713	668	5190	1275	
		* 1/1200	7/8480	1.3	1.5	713	713	5190	1275	
		* 1/1500	7/10600	1	1.2	713	713	5190	1275	

2-2. Performance Table

Motor Power	Frame Size	Reduction Ratio	Actual Reduction Ratio	Output Shaft Speed		Allowable Output Shaft Torque		Allowable Output Shaft O.H.L.	Allowable Output Shaft Thrust Load	Drawings
				r/min		N·m				
				50 Hz	60 Hz	50 Hz	60 Hz	N	N	
3-Phase 0.4 kW	35	1/5	1/5	300	360	11	9.2	1960	490	P.399
		1/7.5	2/15	200	240	17	14	2250	569	
		1/10	1/10	150	180	23	19	2450	618	
		1/12.5	19/235	120	144	27	24	2600	647	
		1/15	1/15	100	120	33	27	2740	686	
		1/20	1/20	75	90	44	37	2990	745	
		1/25	1/25	60	72	55	46	3190	794	
		1/30	1/30	50	60	67	55	3280	824	
		1/40	1/40	37.5	45	88	74	3480	873	
		1/50	1/50	30	36	111	92	3480	873	
		1/60	1/60	25	30	133	111	3480	873	
		1/80	1/80	18.8	22.5	169	140	3480	873	
		1/100	19/1880	15	18	211	175	3530	883	
		1/120	1/120	12.5	15	253	211	3530	883	
		* 1/160	1/160	9.4	11.3	270	270	3630	912	
		* 1/200	1/200	7.5	9	270	270	3630	912	
		* /240	1/240	6.3	7.5	270	270	3630	912	
	45	1/300	7/2080	5	6	565	471	5190	1275	P.400
		1/375	133/48880	4	4.8	707	589	5190	1275	
		* 1/450	7/3120	3.3	4	713	707	5190	1275	
	55	* 1/600	49/28600	2.5	3	1030	891	9800	2452	P.401
		* 1/750	11/8320	2	2.4	1030	1030	9800	2452	
		* 1/900	7/6136	1.7	2	1030	1030	9800	2452	
		* 1/1200	49/57200	1.3	1.5	1030	1030	9800	2452	
		* 1/1500	11/16640	1	1.2	1030	1030	9800	2452	
3-Phase 0.75 kW	45	1/5	1/5	300	360	21	18	2940	735	P.400
		1/7.5	2/15	200	240	31	25	3330	834	
		1/10	1/10	150	180	41	34	3630	912	
		1/12.5	19/235	120	144	52	43	3920	980	
		1/15	1/15	100	120	63	52	4070	1030	
		1/20	1/20	75	90	83	70	4460	1079	
		1/25	1/25	60	72	104	86	4700	1177	
		1/30	1/30	50	60	124	104	4750	1177	
		1/40	1/40	37.5	45	166	138	4750	1177	
		1/50	1/50	30	36	208	173	4750	1177	
		1/60	1/60	25	30	249	208	4750	1177	
		1/80	1/80	18.8	22.5	316	263	4750	1177	
		1/100	19/1880	15	18	395	328	4750	1177	
		1/120	1/120	12.5	15	473	395	4750	1177	
		* 1/160	1/160	9.4	11.3	554	526	5190	1275	
		* 1/200	1/200	7.5	9	554	554	5190	1275	
		* 1/240	1/240	6.3	7.5	554	554	5190	1275	
	55	* 1/300	7/2120	5	6	1030	883	9800	2452	P.401
		* 1/375	1/371	4	4.8	1030	1030	9800	2452	
		* 1/450	7/3180	3.3	4	1030	1030	9800	2452	

Note 1: Please be sure to read the notes on page 392.

Motor Power	Frame Size	Reduction Ratio	Actual Reduction Ratio	Output Shaft Speed		Allowable Output Shaft Torque		Allowable Output Shaft O.H.L.	Allowable Output Shaft Thrust Load	Drawings
				r/min		N·m				
				50 Hz	60 Hz	50 Hz	60 Hz	N	N	
3-Phase 1.5 kW	55	1/5	1/5	300	360	41	34	4700	1177	P.401
		1/7.5	2/15	200	240	63	52	5340	1324	
		1/10	1/10	150	180	83	70	5780	1422	
		1/12.5	4/49	120	144	104	86	6130	1520	
		1/15	1/15	100	120	124	104	6320	1569	
		1/20	14/275	75	90	166	138	6320	1569	
		1/25	11/280	60	72	208	173	6320	1569	
		1/30	2/59	50	60	249	208	6320	1569	
		1/40	1/40	37.5	45	332	276	6320	1569	
		1/50	1/49	30	36	416	345	6320	1569	
		1/60	1/60	25	30	498	416	6320	1569	
		1/80	7/550	18.8	22.5	631	526	6420	1618	
		1/100	11/1120	15	18	789	658	6420	1618	
		1/120	1/118	12.5	15	947	789	7500	1863	
		* 1/160	7/1100	9.4	11.3	1030	1030	8330	2059	
		* 1/200	11/2240	7.5	9	1030	1030	9020	2256	
		* 1/240	1/236	6.3	7.5	1030	1030	9800	2452	
3-Phase 2.2 kW	55	1/5	1/5	300	360	61	51	4700	1177	P.401
		1/7.5	2/15	200	240	91	76	5340	1324	
		1/10	1/10	150	180	122	102	5780	1422	
		1/12.5	4/49	120	144	152	126	6130	1520	
		1/15	1/15	100	120	182	152	6320	1569	
		1/20	14/275	75	90	244	203	6320	1569	
		1/25	11/280	60	72	305	254	6320	1569	
		1/30	2/59	50	60	366	305	6320	1569	
		1/40	1/40	37.5	45	487	406	6320	1569	
		1/50	1/49	30	36	609	508	6320	1569	
		1/60	1/60	25	30	731	609	6320	1569	
		1/80	7/550	18.8	22.5	926	771	6420	1618	
		* 1/100	11/1120	15	18	1030	964	6420	1618	
		* 1/120	1/118	12.5	15	1030	1030	7500	1863	

Note 1: Please be sure to read the notes on page 392.

FA Type IP65 Gearmotors / IP65 Gearmotors with Brake <Right Angle Hollow Bore/FAS>

[Notes]

- The values in parentheses ( ) in the drawings are the indications for gearmotors with brake.
- The output shaft speed is the value relative to the synchronous speed of the motor and the reduction ratio.
- The key for the output shaft is not included.
- In the performance table, ▭ indicates that the shaft rotates clockwise when viewed from the flange surface side when the connection is made as shown on page 547 (CW). (Refer to the figure on the right)
- Allowable output shaft O.H.L. is the value at 20 mm from the end of the output shaft.
- The "*" mark indicates a limited torque type. Please make sure to check the allowable output shaft torque in the performance table.

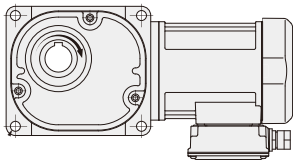

Motor Power	Frame Size	Reduction Ratio	Actual Reduction Ratio	Output Shaft Speed r/min		Allowable Output Shaft Torque N·m		Allowable Output Shaft O.H.L.	Allowable Output Shaft Thrust Load	Drawings
				50 Hz	60 Hz	50 Hz	60 Hz	N	N	
3-Phase 0.4kW	55	* 1/600	49/28600	2.5	3	1030	891	9800	2452	P.402
		* 1/750	11/8320	2	2.4	1030	1030	9800	2452	
		* 1/900	7/6136	1.7	2	1030	1030	9800	2452	
		* 1/1200	49/57200	1.3	1.5	1030	1030	9800	2452	
		* 1/1500	11/16640	1	1.2	1030	1030	9800	2452	
3-Phase 0.75kW	55	* 1/300	7/2120	5	6	1030	883	9800	2452	P.402
		* 1/375	1/371	4	4.8	1030	1030	9800	2452	
		* 1/450	7/3180	3.3	4	1030	1030	9800	2452	
3-Phase 1.5kW	55	1/5	1/5	300	360	41	34	4700	1177	P.402
		1/7.5	2/15	200	240	63	52	5340	1324	
		1/10	1/10	150	180	83	70	5780	1422	
		1/12.5	4/49	120	144	104	86	6130	1520	
		1/15	1/15	100	120	124	104	6320	1569	
		1/20	14/275	75	90	166	138	6320	1569	
		1/25	11/280	60	72	208	173	6320	1569	
		1/30	2/59	50	60	249	208	6320	1569	
		1/40	1/40	37.5	45	332	276	6320	1569	
		1/50	1/49	30	36	416	345	6320	1569	
		1/60	1/60	25	30	498	416	6320	1569	
		1/80	7/550	18.8	22.5	631	526	6420	1618	
		1/100	11/1120	15	18	789	658	6420	1618	
		1/120	1/118	12.5	15	947	789	7500	1863	
		* 1/160	7/1100	9.4	11.3	1030	1030	8330	2059	
		* 1/200	11/2240	7.5	9	1030	1030	9020	2256	
		* 1/240	1/236	6.3	7.5	1030	1030	9800	2452	

Motor Power	Frame Size	Reduction Ratio	Actual Reduction Ratio	Output Shaft Speed		Allowable Output Shaft Torque		Allowable Output Shaft O.H.L.	Allowable Output Shaft Thrust Load	Drawings
				r/min		N·m				
				50 Hz	60 Hz	50 Hz	60 Hz	N	N	
3-Phase 2.2kW	55	1/5	1/5	300	360	61	51	4700	1177	P.402
		1/7.5	2/15	200	240	91	76	5340	1324	
		1/10	1/10	150	180	122	102	5780	1422	
		1/12.5	4/49	120	144	152	126	6130	1520	
		1/15	1/15	100	120	182	152	6320	1569	
		1/20	14/275	75	90	244	203	6320	1569	
		1/25	11/280	60	72	305	254	6320	1569	
		1/30	2/59	50	60	366	305	6320	1569	
		1/40	1/40	37.5	45	487	406	6320	1569	
		1/50	1/49	30	36	609	508	6320	1569	
		1/60	1/60	25	30	731	609	6320	1569	
		1/80	7/550	18.8	22.5	926	771	6420	1618	
		* 1/100	11/1120	15	18	1030	964	6420	1618	
		* 1/120	1/118	12.5	15	1030	1030	7500	1863	

Note 1: Please be sure to read the notes on page 395.

2-3. Drawings

FS Type Right Angle Hollow Bore | Shaft Diameter 25 | **Flange** Mounting

The values in parentheses ( ) are the indications for gearmotors with brake.

<Figure 1>

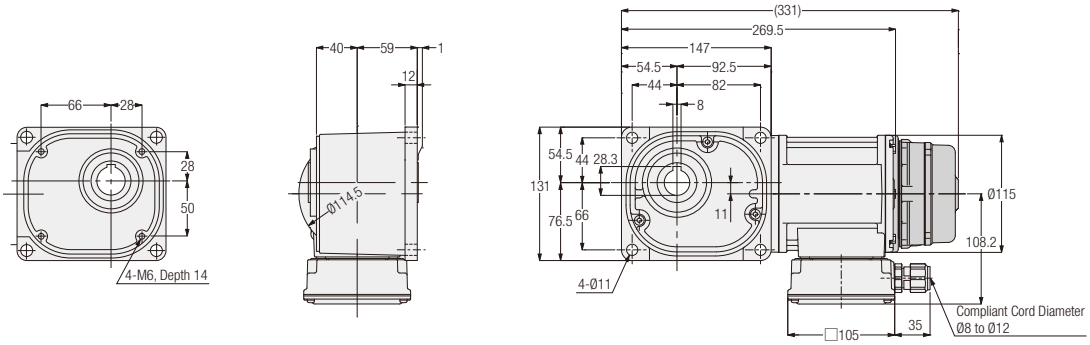

Number of Phases	Power	Output Shaft: Stainless Steel	Output Shaft: Carbon Steel	Reduction Ratio	Figure Number	Brake	Approx. Weight (kg)
3-Phase	0.1 kW	FS25S∗∗∗-WM01T◇◇EN	FS25N∗∗∗-WM01T◇◇EN	10, 12.5, 15, 20, 25, 30, 40, 50, 60, 80, 100, 120, 160, 200, 240	1	No	7.5
		FS25S∗∗∗-WM01T◇◇EV◆	FS25N∗∗∗-WM01T◇◇EV◆			Yes	9

Note: The reduction ratio will be indicated as ∗∗∗ in the nomenclature. Supply voltage/certification codes are indicated as ◇◇ and brake specification is indicated as ◆.
Note: When the reduction ratio is 12.5, “12” will be indicated as ∗∗∗ in the nomenclature.
Note: Please refer to page 982 for the details of the output shaft dimensions.
Note: Please refer to page 392 for the performance table.

FS Type Right Angle Hollow Bore | Shaft Diameter **30** | **Flange** Mounting

The values in parentheses ( ) are the indications for gearmotors with brake.

<Figure 1>

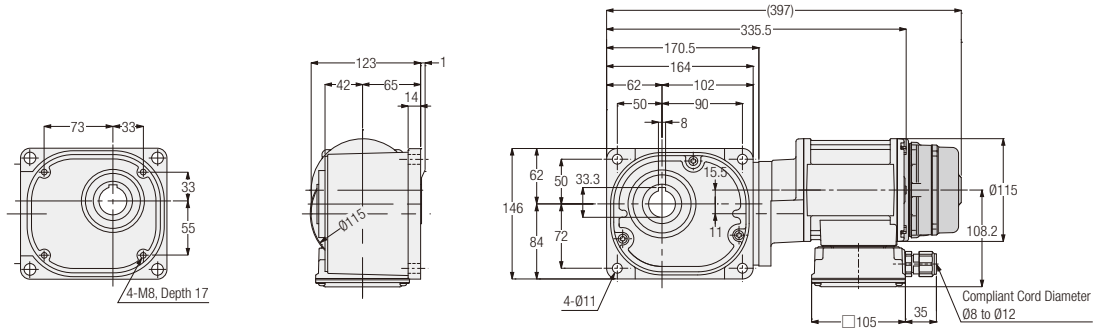

<Figure 2>

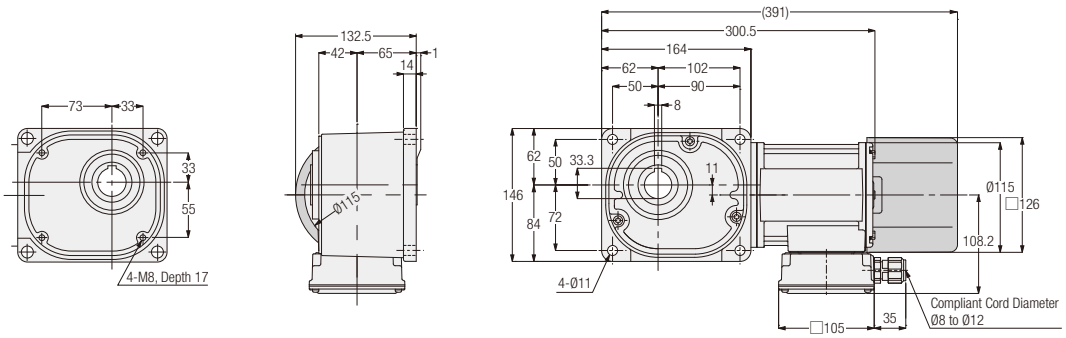

Number of Phases	Power	Output Shaft: Stainless Steel	Output Shaft: Carbon Steel	Reduction Ratio	Figure Number	Brake	Approx. Weight (kg)
3-Phase	0.1 kW	FS30S∗∗∗-WM01T◇◇EN	FS30N∗∗∗-WM01T◇◇EN	300, 375, 450	1	No	11.5
		FS30S∗∗∗-WM01T◇◇EV◆	FS30N∗∗∗-WM01T◇◇EV◆			Yes	13
	0.2 kW	FS30S∗∗∗-WM02T◇◇EN	FS30N∗∗∗-WM02T◇◇EN	5, 7.5, 10, 12.5, 15, 20, 25, 30, 40, 50, 60, 80, 100, 120, 160, 200, 240	2	No	9.5
		FS30S∗∗∗-WM02T◇◇EV◆	FS30N∗∗∗-WM02T◇◇EV◆			Yes	11

Note: The reduction ratio will be indicated as ∗∗∗ in the nomenclature. Supply voltage/certification codes are indicated as ◇◇ and brake specification is indicated as ◆.
Note: When the reduction ratio is 7.5, “7” will be indicated as ∗∗∗ in the nomenclature, and when the reduction ratio is 12.5, “12” will be indicated as ∗∗∗ in the nomenclature.
Note: Please refer to page 982 for the details of the output shaft dimensions.
Note: Please refer to page 392 for the performance table.

FS Type Right Angle Hollow Bore | Shaft Diameter 35 | **Flange** Mounting

The values in parentheses ( ) are the indications for gearmotors with brake.

<Figure 1>

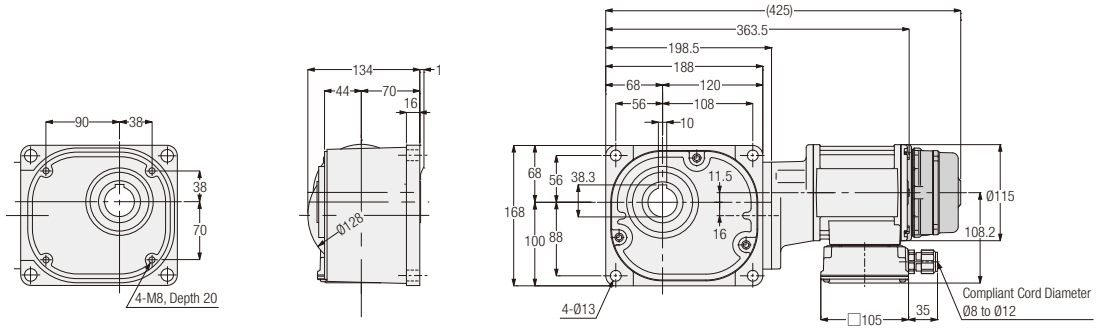

<Figure 2>

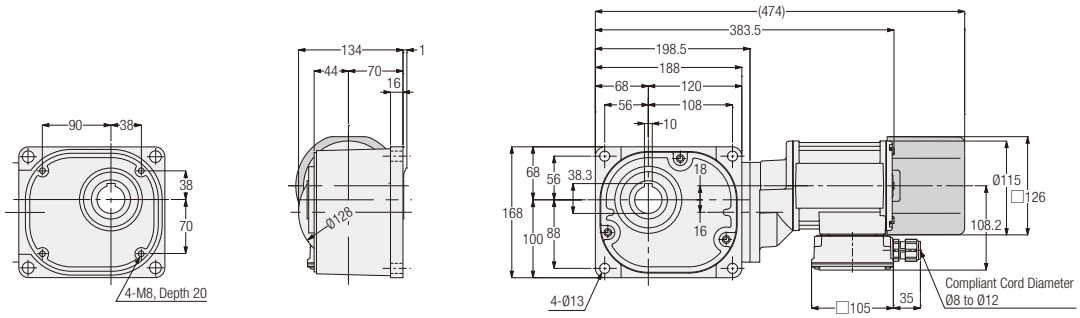

<Figure 3>

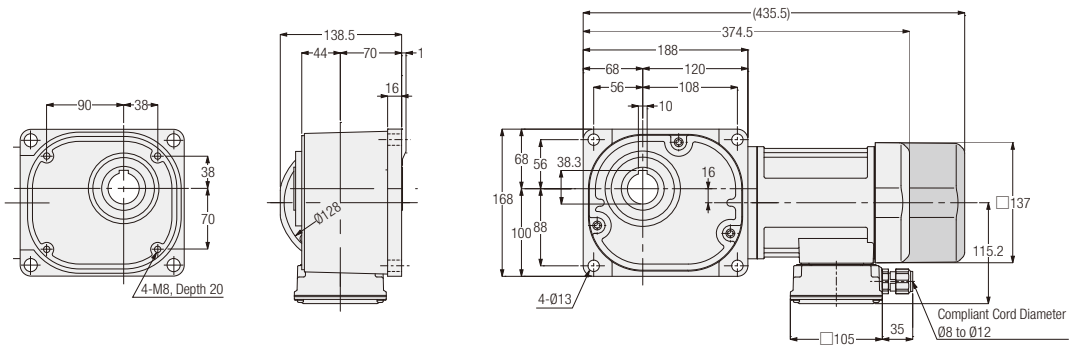

Number of Phases	Power	Output Shaft: Stainless Steel	Output Shaft: Carbon Steel	Reduction Ratio	Figure Number	Brake	Approx. Weight (kg)
3-Phase	0.1 kW	FS35S∗∗∗-WM01T◇◇EN	FS35N∗∗∗-WM01T◇◇EN	600, 750, 900, 1200, 1500	1	No	13.5
		FS35S∗∗∗-WM01T◇◇EV◆	FS35N∗∗∗-WM01T◇◇EV◆			Yes	15
	0.2 kW	FS35S∗∗∗-WM02T◇◇EN	FS35N∗∗∗-WM02T◇◇EN	300, 375, 450	2	No	14.5
		FS35S∗∗∗-WM02T◇◇EV◆	FS35N∗∗∗-WM02T◇◇EV◆			Yes	16
	0.4 kW	FS35S∗∗∗-WM04T◇◇EN	FS35N∗∗∗-WM04T◇◇EN	5, 7.5, 10, 12.5, 15, 20, 25, 30, 40, 50, 60, 80, 100, 120, 160, 200, 240	3	No	14
		FS35S∗∗∗-WM04T◇◇EV◆	FS35N∗∗∗-WM04T◇◇EV◆			Yes	16

Note: The reduction ratio will be indicated as ∗∗∗ in the nomenclature. Supply voltage/certification codes are indicated as ◇◇ and brake specification is indicated as ◆.
Note: When the reduction ratio is 7.5, “7” will be indicated as ∗∗∗ in the nomenclature, and when the reduction ratio is 12.5, “12” will be indicated as ∗∗∗ in the nomenclature.
Note: Please refer to page 982 for the details of the output shaft dimensions.
Note: Please refer to page 392 for the performance table.

FS Type Right Angle Hollow Bore | Shaft Diameter **45** | **Flange** Mounting

The values in parentheses ( ) are the indications for gearmotors with brake.

<Figure 1>

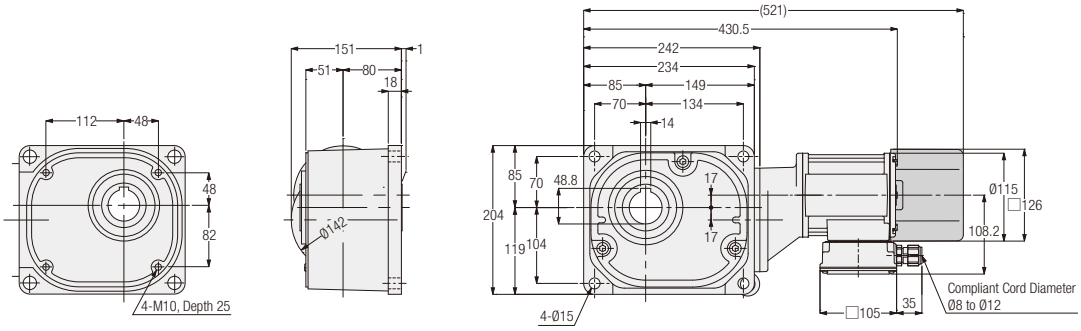

<Figure 2>

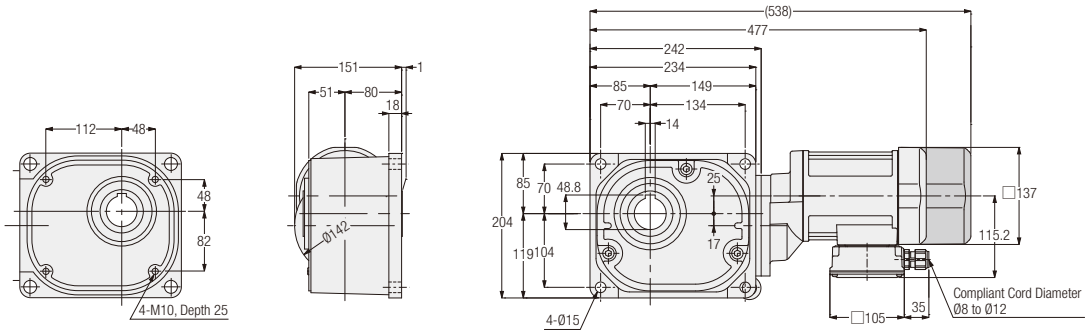

<Figure 3>

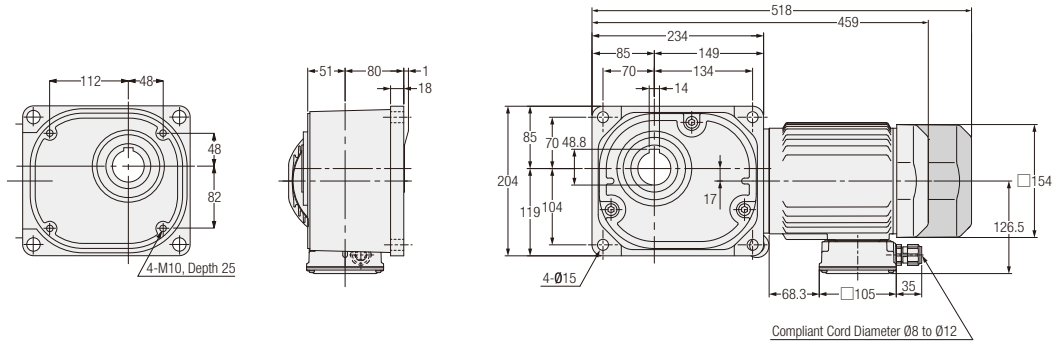

Number of Phases	Power	Output Shaft: Stainless Steel	Output Shaft: Carbon Steel	Reduction Ratio	Figure Number	Brake	Approx. Weight (kg)
3-Phase	0.2 kW	FS45S∗∗∗-WM02T◇◇EN	FS45N∗∗∗-WM02T◇◇EN	600, 750, 900, 1200, 1500	1	No	20
		FS45S∗∗∗-WM02T◇◇EV◆	FS45N∗∗∗-WM02T◇◇EV◆			Yes	21.5
	0.4 kW	FS45S∗∗∗-WM04T◇◇EN	FS45N∗∗∗-WM04T◇◇EN	300, 375, 450	2	No	22.5
		FS45S∗∗∗-WM04T◇◇EV◆	FS45N∗∗∗-WM04T◇◇EV◆			Yes	24
	0.75 kW	FS45S∗∗∗-WR08T◇◇EN	FS45N∗∗∗-WR08T◇◇EN	5, 7.5, 10, 12.5, 15, 20, 25, 30, 40, 50, 60, 80, 100, 120, 160, 200, 240	3	No	27.5
		FS45S∗∗∗-WR08T◇◇EV◆	FS45N∗∗∗-WR08T◇◇EV◆			Yes	30.5

Note: The reduction ratio will be indicated as ∗∗∗ in the nomenclature. Supply voltage/certification codes are indicated as ◇◇ and brake specification is indicated as ◆.
Note: When the reduction ratio is 7.5, “7” will be indicated as ∗∗∗ in the nomenclature, and when the reduction ratio is 12.5, “12” will be indicated as ∗∗∗ in the nomenclature.
Note: Please refer to page 982 for the details of the output shaft dimensions.
Note: Please refer to page 392 for the performance table.

FS Type Right Angle Hollow Bore | Shaft Diameter 55 | **Flange** Mounting

The values in parentheses ( ) are the indications for gearmotors with brake.

<Figure 1>

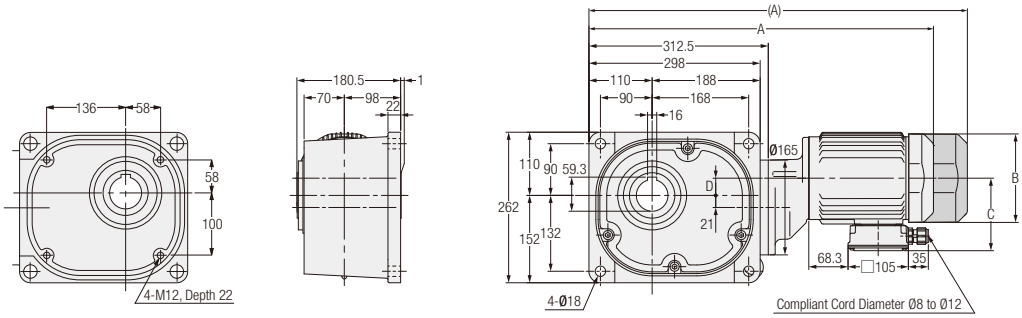

<Figure 2>

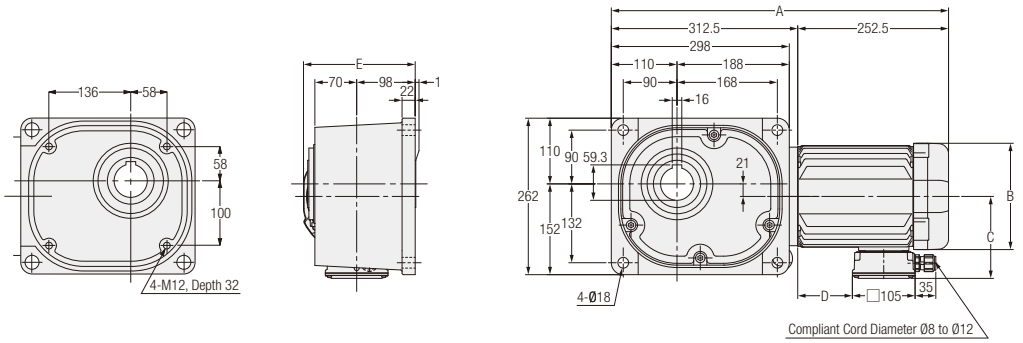

Number of Phases	Power	Output Shaft: Stainless Steel	Output Shaft: Carbon Steel	Reduction Ratio	Figure Number	Brake	Approx. Weight (kg)	A	B	C	D	E
3-Phase	0.4 kW	FS55S∗∗∗-WM04T◇◇EN	FS55N∗∗∗-WM04T◇◇EN	600, 750, 900, 1200, 1500	1	No	60.5	547.5	□137	115.2	21	-
		FS55S∗∗∗-WM04T◇◇EV◆	FS55N∗∗∗-WM04T◇◇EV◆			Yes	62	608.5	□137	115.2	21	-
	0.75 kW	FS55S∗∗∗-WR08T◇◇EN	FS55N∗∗∗-WR08T◇◇EN	300, 375, 450	1	No	68.5	600	□154	126.5	30	-
		FS55S∗∗∗-WR08T◇◇EV◆	FS55N∗∗∗-WR08T◇◇EV◆			Yes	71	659	□154	126.5	30	-
	1.5 kW	FS55S∗∗∗-WR15T◇◇EN	FS55N∗∗∗-WR15T◇◇EN	5, 7.5, 10, 12.5, 15, 20, 25, 30, 40, 50, 60, 80, 100, 120, 160, 200, 240	2	No	74.5	565	□178	137.5	91.5	187
	2.2 kW	FS55S∗∗∗-WR22T◇◇EN	FS55N∗∗∗-WR22T◇◇EN			No	85	614.5	□192	147.5	140.5	194

Note: The reduction ratio will be indicated as ∗∗∗ in the nomenclature. Supply voltage/certification codes are indicated as ◇◇ and brake specification is indicated as ◆.
Note: When the reduction ratio is 7.5, “7” will be indicated as ∗∗∗ in the nomenclature, and when the reduction ratio is 12.5, “12” will be indicated as ∗∗∗ in the nomenclature.
Note: There are no gearmotors with motor power of 1.5 kW and 2.2 kW that have a brake.
Note: Please refer to page 982 for the details of the output shaft dimensions.
Note: Please refer to page 393 for the performance table.

FAS Type Right Angle Hollow Bore | Shaft Diameter 55 | **Flange** Mounting

The values in parentheses ( ) are the indications for gearmotors with brake.

<Figure 1>

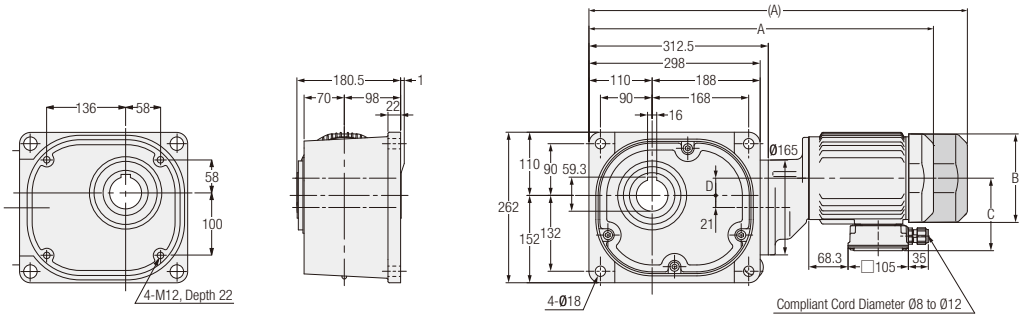

<Figure 2>

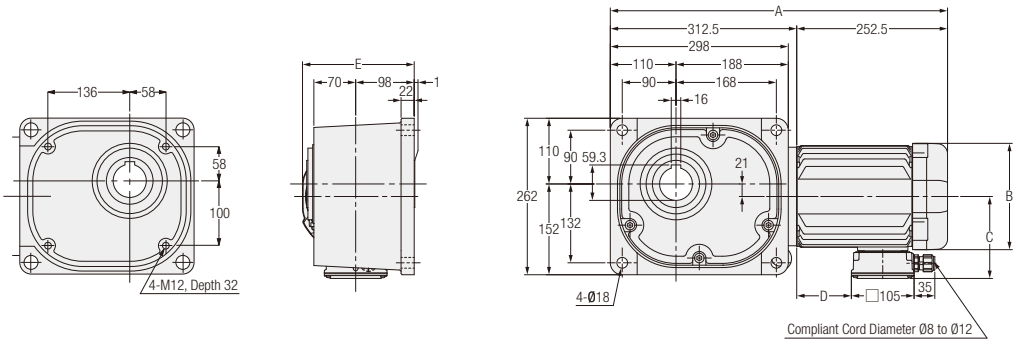

Number of Phases	Power	Output Shaft: Stainless Steel	Output Shaft: Carbon Steel	Reduction Ratio	Figure Number	Brake	Approx. Weight (kg)	A	B	C	D	E
3-Phase	0.4kW	FAS55S∗∗∗-WM04T◇◇EN	FAS55N∗∗∗-WM04T◇◇EN	600,750,900, 1200,1500	1	No	42.7	547.5	□137	115.2	21	-
		FAS55S∗∗∗-WM04T◇◇EV◆	FAS55N∗∗∗-WM04T◇◇EV◆			Yes	44.2	608.5	□137	115.2	21	-
	0.75kW	FAS55S∗∗∗-WR08T◇◇EN	FAS55N∗∗∗-WR08T◇◇EN	300,375,450	1	No	50.7	600	□154	126.5	30	-
		FAS55S∗∗∗-WR08T◇◇EV◆	FAS55N∗∗∗-WR08T◇◇EV◆			Yes	53.2	659	□154	126.5	30	-
	1.5kW	FAS55S∗∗∗-WR15T◇◇EN	FAS55N∗∗∗-WR15T◇◇EN	5, 7.5, 10, 12.5, 15, 20, 25, 30, 40, 50, 60, 80, 100, 120, 160, 200, 240	2	No	56.7	565	□178	137.5	91.5	187
	2.2kW	FAS55S∗∗∗-WR22T◇◇EN	FAS55N∗∗∗-WR22T◇◇EN			No	67.2	614.5	□192	147.5	140.5	194

Note: The reduction ratio will be indicated as ∗∗∗ in the nomenclature. Supply voltage/certification codes are indicated as ◇◇ and brake specification is indicated as ◆.
Note: When the reduction ratio is 7.5, “7” will be indicated as ∗∗∗ in the nomenclature, and when the reduction ratio is 12.5, “12” will be indicated as ∗∗∗ in the nomenclature.
Note: There are no gearmotors with motor power of 1.5 kW and 2.2 kW that have a brake.
Note: Please refer to page 982 for the details of the output shaft dimensions.
Note: Please refer to page 395 for the performance table.

MEMO

3. Gearboxes (Double Shaft Type)

3-1. Performance Table

F Type <Right Angle Hollow Bore/FS>

[Notes]

- The motor power value is based on usage of 4 poles motor.
- When using an output shaft for a motor other than a 4 poles motor, the allowable output shaft torque value is calculated by multiplying the torque by the torque correction coefficient as shown on page 626.
- Allowable output shaft O.H.L. is the value at 20 mm from the end of the output shaft.
- Please refer to below figure for the rotational direction of the output shaft.
- The "*" mark indicates a limited torque type. Please make sure to check the allowable output shaft torque in the performance table.
- The key for the output shaft is not included.

■ Rotational Direction Relationship (When Viewed from the Flange Surface Side)

The rotational direction shown Below with arrow illustrates the rotation relationship between the output shaft / input and is no way illustrating limitations in rotational direction.

Type	Power	Reduction Ratio
Right Angle Hollow Bore/FS Type	0.1 kW to 0.75 kW	1/5 to 1/60
	1.5 kW to 2.2 kW	1/5 to 1/30

Type	Power	Reduction Ratio
Right Angle Hollow Bore/FS Type	0.1 kW to 0.75 kW	1/80 to 1/240
	1.5 kW to 2.2 kW	1/40 to 1/240

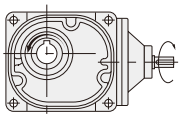

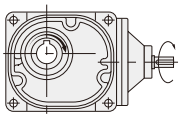

4 Poles Motor Power Class	Frame Size	Reduction Ratio	Actual Reduction Ratio	Allowable Output Shaft Torque Input (1500 r/min)	Allowable O.H.L. N		Allowable Output Shaft Thrust Load	Drawings
				N·m	Input Shaft	Output Shaft	N	
0.1 kW	25	1/10	1/10	5.2	196	1520	382	P.407
		1/12.5	2/25	6.5		1620	402	
		1/15	1/15	7.7		1720	431	
		1/20	1/20	11		1860	471	
		1/25	19/470	13		2010	500	
		1/30	1/30	16		2110	530	
		1/40	1/40	21		2300	579	
		1/50	1/50	25		2450	618	
		1/60	1/60	31		2550	637	
		1/80	1/80	39		2550	637	
		1/100	19/1880	49		2550	637	
		1/120	1/120	59		2550	637	
		1/160	1/160	78		2550	637	
		1/200	1/200	98		2550	637	
		* 1/240	1/240	101		2550	637	
0.2 kW	30	1/5	1/5	5.5	245	1520	382	P.407
		1/7.5	2/15	8.3		1760	441	
		1/10	1/10	11		1910	481	
		1/12.5	19/235	14		2060	520	
		1/15	1/15	17		2160	539	
		1/20	1/20	23		2400	598	
		1/25	1/25	27		2550	637	
		1/30	1/30	33		2650	667	
		1/40	1/40	44		2840	716	
		1/50	1/50	55		2990	745	
		1/60	1/60	67		3090	775	
		1/80	1/80	84		3090	775	
		1/100	19/1880	105		3140	785	
		1/120	1/120	126		3140	785	
		1/160	1/160	169		3140	785	
		* 1/200	1/200	184		3140	785	
		* 1/240	1/240	184		3140	785	

3-1. Performance Table

4 Poles Motor Power Class	Frame Size	Reduction Ratio	Actual Reduction Ratio	Allowable Output Shaft Torque Input (1500 r/min)	Allowable O.H.L. N		Allowable Output Shaft Thrust Load	Drawings
				N·m	Input Shaft	Output Shaft	N	
0.4 kW	35	1/5	1/5	11	294	1960	490	P.408
		1/7.5	2/15	17		2250	569	
		1/10	1/10	23		2450	618	
		1/12.5	19/235	27		2600	647	
		1/15	1/15	33		2740	686	
		1/20	1/20	44		2990	745	
		1/25	1/25	55		3190	794	
		1/30	1/30	67		3280	824	
		1/40	1/40	88		3480	873	
		1/50	1/50	111		3480	873	
		1/60	1/60	133		3480	873	
		1/80	1/80	169		3480	873	
		1/100	19/1880	211		3530	883	
		1/120	1/120	253		3530	883	
		* 1/160	1/160	270		3630	912	
		* 1/200	1/200	270		3630	912	
		* 1/240	1/240	270		3630	912	
0.75 kW	45	1/5	1/5	21	392	2940	735	P.408
		1/7.5	2/15	31		3330	834	
		1/10	1/10	41		3630	912	
		1/12.5	19/235	52		3920	980	
		1/15	1/15	63		4070	1030	
		1/20	1/20	83		4460	1079	
		1/25	1/25	104		4700	1177	
		1/30	1/30	124		4750	1177	
		1/40	1/40	166		4750	1177	
		1/50	1/50	208		4750	1177	
		1/60	1/60	249		4750	1177	
		1/80	1/80	316		4750	1177	
		1/100	19/1880	395		4750	1177	
		1/120	1/120	473		4750	1177	
		* 1/160	1/160	554		5190	1275	
		* 1/200	1/200	554		5190	1275	
		* 1/240	1/240	554		5190	1275	
1.5 kW	55	1/5	1/5	41	392	4700	1177	P.409
		1/7.5	2/15	63		5340	1324	
		1/10	1/10	83		5780	1422	
		1/12.5	4/49	104		6130	1520	
		1/15	1/15	124		6320	1569	
		1/20	14/275	166		6320	1569	
		1/25	11/280	208		6320	1569	
		1/30	2/59	249		6320	1569	
		1/40	1/40	332		6320	1569	
		1/50	1/49	416		6320	1569	
		1/60	1/60	498		6320	1569	
		1/80	7/550	631		6420	1618	
		1/100	11/1120	789		6420	1618	
		1/120	1/118	947		7500	1863	
		* 1/160	7/1100	1030		8330	2059	
		* 1/200	11/2240	1030		9020	2256	
		* 1/240	1/236	1030		9800	2452	
2.2 kW	55	1/5	1/5	61	392	4700	1177	P.409
		1/7.5	2/15	91		5340	1324	
		1/10	1/10	122		5780	1422	
		1/12.5	4/49	152		6130	1520	
		1/15	1/15	182		6320	1569	
		1/20	14/275	244		6320	1569	
		1/25	11/280	305		6320	1569	
		1/30	2/59	366		6320	1569	
		1/40	1/40	487		6320	1569	
		1/50	1/49	609		6320	1569	
		1/60	1/60	731		6320	1569	
		1/80	7/550	926		6420	1618	
		* 1/100	11/1120	1030		6420	1618	
		* 1/120	1/118	1030		7500	1863	

FA Type <Right Angle Hollow Bore/FAS>

[Notes]

- The motor power value is based on usage of 4 poles motor.
- When using an output shaft for a motor other than a 4 poles motor, the allowable output shaft torque value is calculated by multiplying the torque by the torque correction coefficient as shown on page 626.
- Allowable output shaft O.H.L. is the value at 20 mm from the end of the output shaft.
- Please refer to below figure for the rotational direction of the output shaft.
- The "*" mark indicates a limited torque type. Please make sure to check the allowable output shaft torque in the performance table.
- The key for the output shaft is not included.

■ Rotational Direction Relationship (When Viewed from the Flange Surface Side)

The rotational direction shown Below with arrow illustrates the rotation relationship between the output shaft / input and is no way illustrating limitations in rotational direction.

Type	Power	Reduction Ratio
Right Angle Hollow Bore/FAS Type	1.5 kW to 2.2 kW	1/5 to 1/30

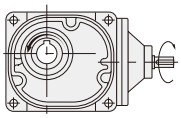

Type	Power	Reduction Ratio
Right Angle Hollow Bore/FAS Type	1.5 kW to 2.2 kW	1/40 to 1/240

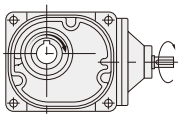

4 Poles Motor Power Class	Frame Size	Reduction Ratio	Actual Reduction Ratio	Allowable Output Shaft Torque Input (1500 r/min)	Allowable O.H.L.		Allowable Output Shaft Thrust Load	Drawings
					N			
				N·m	Input Shaft	Output Shaft	N	
1.5 kW	55	1/5	1/5	41	392	4700	1177	P.410
		1/7.5	2/15	63		5340	1324	
		1/10	1/10	83		5780	1422	
		1/12.5	4/49	104		6130	1520	
		1/15	1/15	124		6320	1569	
		1/20	14/275	166		6320	1569	
		1/25	11/280	208		6320	1569	
		1/30	2/59	249		6320	1569	
		1/40	1/40	332		6320	1569	
		1/50	1/49	416		6320	1569	
		1/60	1/60	498		6320	1569	
		1/80	7/550	631		6420	1618	
		1/100	11/1120	789		6420	1618	
		1/120	1/118	947		7500	1863	
		* 1/160	7/1100	1030		8330	2059	
		* 1/200	11/2240	1030		9020	2256	
		* 1/240	1/236	1030		9800	2452	
2.2 kW	55	1/5	1/5	61	392	4700	1177	P.410
		1/7.5	2/15	91		5340	1324	
		1/10	1/10	122		5780	1422	
		1/12.5	4/49	152		6130	1520	
		1/15	1/15	182		6320	1569	
		1/20	14/275	244		6320	1569	
		1/25	11/280	305		6320	1569	
		1/30	2/59	366		6320	1569	
		1/40	1/40	487		6320	1569	
		1/50	1/49	609		6320	1569	
		1/60	1/60	731		6320	1569	
		1/80	7/550	926		6420	1618	
		* 1/100	11/1120	1030		6420	1618	
		* 1/120	1/118	1030		7500	1863	

3-2. Drawings

FS Type Right Angle Hollow Bore | Shaft Diameter **25** | **Flange** Mounting

<Figure 1>

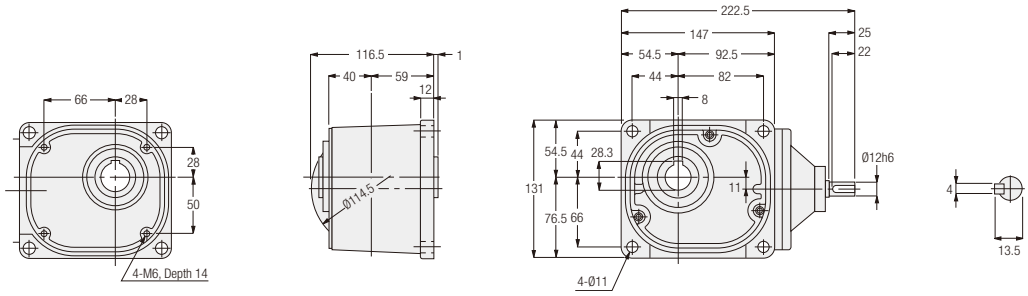

Motor Power Class	Part Number	Reduction Ratio	Figure Number	Approx. Weight (kg)
0.1 kW	FS-25-∗∗∗-010	10, 12.5, 15, 20, 25, 30, 40, 50, 60, 80, 100, 120, 160, 200, 240	1	5

Note: The reduction ratio will be indicated as ∗∗∗ in the nomenclature.
Note: Please refer to page 982 for the details of the output shaft dimensions.
Note: Please refer to page 404 for the performance table.

FS Type Right Angle Hollow Bore | Shaft Diameter **30** | **Flange** Mounting

<Figure 2>

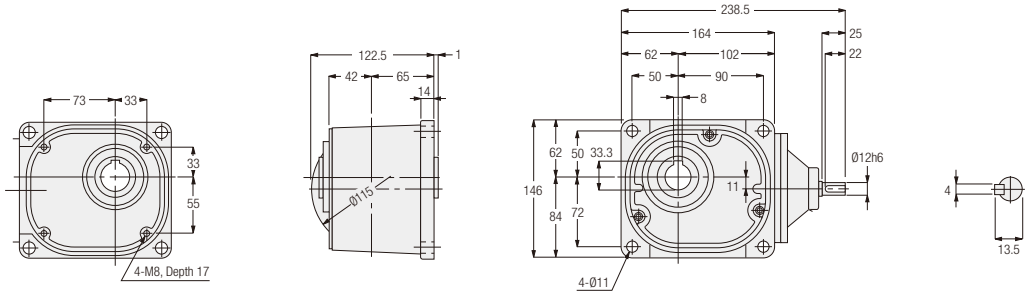

Motor Power Class	Part Number	Reduction Ratio	Figure Number	Approx. Weight (kg)
0.2 kW	FS-30-∗∗∗-020	5, 7.5, 10, 12.5, 15, 20, 25, 30, 40, 50, 60, 80, 100, 120, 160, 200, 240	2	7

Note: The reduction ratio will be indicated as ∗∗∗ in the nomenclature.
Note: Please refer to page 982 for the details of the output shaft dimensions.
Note: Please refer to page 404 for the performance table.

FS Type Right Angle Hollow Bore | Shaft Diameter 35 | Flange Mounting

<Figure 1>

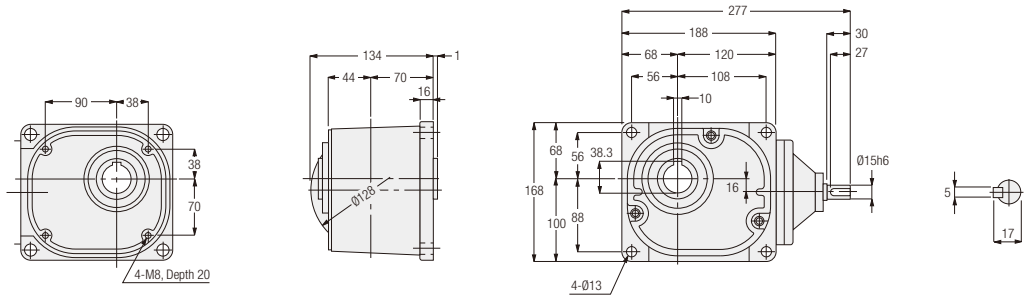

Motor Power Class	Part Number	Reduction Ratio	Figure Number	Approx. Weight (kg)
0.4 kW	FS-35-∗∗∗-040	5, 7.5, 10, 12.5, 15, 20, 25, 30, 40, 50, 60, 80, 100, 120, 160, 200, 240	1	9

Note: The reduction ratio will be indicated as ∗∗∗ in the nomenclature.
Note: Please refer to page 982 for the details of the output shaft dimensions.
Note: Please refer to page 405 for the performance table.

FS Type Right Angle Hollow Bore | Shaft Diameter 45 | Flange Mounting

<Figure 2>

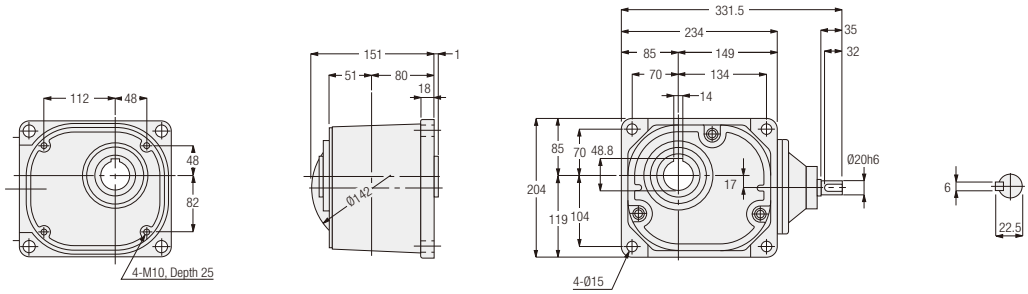

Motor Power Class	Part Number	Reduction Ratio	Figure Number	Approx. Weight (kg)
0.75 kW	FS-45-∗∗∗-075	5, 7.5, 10, 12.5, 15, 20, 25, 30, 40, 50, 60, 80, 100, 120, 160, 200, 240	2	15

Note: The reduction ratio will be indicated as ∗∗∗ in the nomenclature.
Note: Please refer to page 982 for the details of the output shaft dimensions.
Note: Please refer to page 405 for the performance table.

FS Type Right Angle Hollow Bore | Shaft Diameter 55 | **Flange** Mounting

<Figure 1>

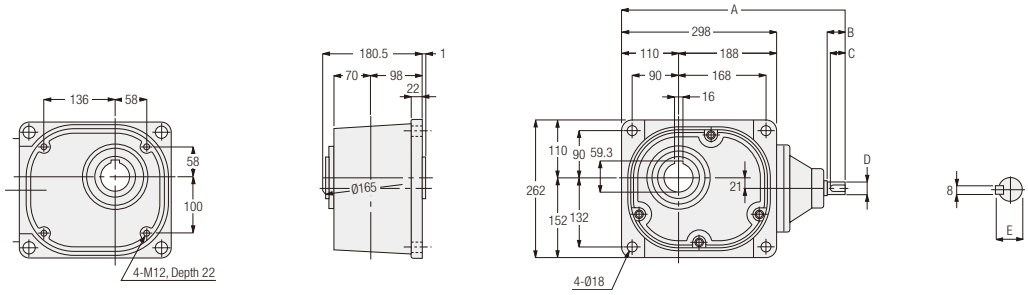

Motor Power Class	Part Number	Reduction Ratio	Figure Number	Approx. Weight (kg)	A	B	C	D	E
1.5 kW	FS-55-∗∗∗-150	5, 7.5, 10, 12.5, 15, 20, 25, 30, 40, 50, 60, 80, 100, 120, 160, 200, 240	1	54	429	40	35	Ø25h6	28
2.2 kW	FS-55-∗∗∗-220	5, 7.5, 10, 12.5, 15, 20, 25, 30, 40, 50, 60, 80, 100, 120	1	55	441	45	40	Ø30h6	33

Note: The reduction ratio will be indicated as ∗∗∗ in the nomenclature.
Note: Please refer to page 982 for the details of the output shaft dimensions.
Note: Please refer to page 405 for the performance table.

FAS Type Right Angle Hollow Bore | Shaft Diameter 55 | **Flange** Mounting

<Figure 1>

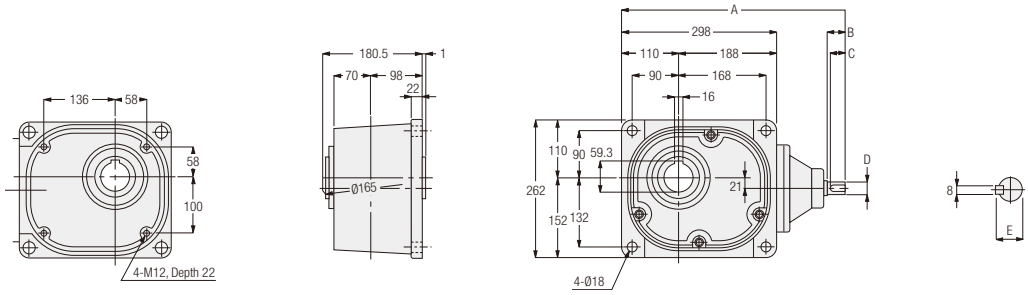

Motor Power Class	Part Number	Reduction Ratio	Figure Number	Approx. Weight (kg)	A	B	C	D	E
1.5 kW	FAS-55-∗∗∗-150	5, 7.5, 10, 12.5, 15, 20, 25, 30, 40, 50, 60, 80, 100, 120, 160, 200, 240	1	36.2	429	40	35	Ø25h6	28
2.2 kW	FAS-55-∗∗∗-220	5, 7.5, 10, 12.5, 15, 20, 25, 30, 40, 50, 60, 80, 100, 120	1	37.2	441	45	40	Ø30h6	33

Note: The reduction ratio will be indicated as ∗∗∗ in the nomenclature.
Note: Please refer to page 982 for the details of the output shaft dimensions.
Note: Please refer to page 406 for the performance table.

MEMO

4. S-Type Gearboxes (Type Which Can Be Equipped With Designated Motor)

4-1. Performance Table

F Type <Right Angle Hollow Bore/FS>

[Notes]

- The value of the allowable output shaft torque is the value when a 4 poles motor is used.
- When using an output shaft for a motor other than a 4 poles motor, the allowable output shaft torque value is calculated by multiplying the torque by the torque correction coefficient as shown on page 626 .
- The key for the output shaft is not included.
- Allowable output shaft O.H.L. is the value at 20 mm from the end of the output shaft.
- Please refer to below figure for the rotational direction of the output shaft.
- The "*" mark indicates a limited torque type. Please make sure to check the allowable output shaft torque in the performance table.

■ Rotational Direction Relationship (When Viewed from the Flange Surface Side)

The rotational direction shown Below with arrow illustrates the rotation relationship between the output shaft / input and is no way illustrating limitations in rotational direction.

Type	Power	Reduction Ratio
Right Angle Hollow Bore/FS Type	0.1 kW to 0.75 kW	1/5 to 1/60
	1.5 kW to 2.2 kW	1/5 to 1/30

Type	Power	Reduction Ratio
Right Angle Hollow Bore/FS Type	0.1 kW to 0.75 kW	1/80 to 1/240
	1.5 kW to 2.2 kW	1/40 to 1/240

4 Poles Motor Power Class	Frame Size	Reduction Ratio	Actual Reduction Ratio	Allowable Output Shaft Torque N·m 50 Hz	Allowable Output Shaft Torque N·m 60 Hz	Allowable Output Shaft O.H.L. N	Allowable Output Shaft Thrust Load N	Drawings
0.1 kW	25	1/10	1/10	5.2	4.3	1520	382	P.415
		1/12.5	2/25	6.5	5.4	1620	402	
		1/15	1/15	7.7	6.5	1720	431	
		1/20	1/20	11	8.6	1860	471	
		1/25	19/470	13	11	2010	500	
		1/30	1/30	16	13	2110	530	
		1/40	1/40	21	18	2300	579	
		1/50	1/50	25	22	2450	618	
		1/60	1/60	31	25	2550	637	
		1/80	1/80	39	32	2550	637	
		1/100	19/1880	49	41	2550	637	
		1/120	1/120	59	49	2550	637	
		1/160	1/160	78	66	2550	637	
		1/200	1/200	98	81	2550	637	
		* 1/240	1/240	101	98	2550	637	
0.2 kW	30	1/5	1/5	5.5	4.6	1520	382	P.415
		1/7.5	2/15	8.3	7	1760	441	
		1/10	1/10	11	9.2	1910	481	
		1/12.5	19/235	14	12	2060	520	
		1/15	1/15	17	14	2160	539	
		1/20	1/20	23	19	2400	598	
		1/25	1/25	27	24	2550	637	
		1/30	1/30	33	27	2650	667	
		1/40	1/40	44	37	2840	716	
		1/50	1/50	55	46	2990	745	
		1/60	1/60	67	55	3090	775	
		1/80	1/80	84	71	3090	775	
		1/100	19/1880	105	87	3140	785	
		1/120	1/120	126	105	3140	785	
		1/160	1/160	169	140	3140	785	
		* 1/200	1/200	184	175	3140	785	
		* 1/240	1/240	184	184	3140	785	

4-1. Performance Table

4 Poles Motor Power Class	Frame Size	Reduction Ratio	Actual Reduction Ratio	Allowable Output Shaft Torque N·m 50 Hz	Allowable Output Shaft Torque N·m 60 Hz	Allowable Output Shaft O.H.L. N	Allowable Output Shaft Thrust Load N	Drawings
0.4 kW	35	1/5	1/5	11	9.2	1960	490	P.416
		1/7.5	2/15	17	14	2250	569	
		1/10	1/10	23	19	2450	618	
		1/12.5	19/235	27	24	2600	647	
		1/15	1/15	33	27	2740	686	
		1/20	1/20	44	37	2990	745	
		1/25	1/25	55	46	3190	794	
		1/30	1/30	67	55	3280	824	
		1/40	1/40	88	74	3480	873	
		1/50	1/50	111	92	3480	873	
		1/60	1/60	133	111	3480	873	
		1/80	1/80	169	140	3480	873	
		1/100	19/1880	211	175	3530	883	
		1/120	1/120	253	211	3530	883	
		* 1/160	1/160	270	270	3630	912	
		* 1/200	1/200	270	270	3630	912	
		* 1/240	1/240	270	270	3630	912	
0.75 kW	45	1/5	1/5	21	18	2940	735	P.416
		1/7.5	2/15	31	25	3330	834	
		1/10	1/10	41	34	3630	912	
		1/12.5	19/235	52	43	3920	980	
		1/15	1/15	63	52	4070	1030	
		1/20	1/20	83	70	4460	1079	
		1/25	1/25	104	86	4700	1177	
		1/30	1/30	124	104	4750	1177	
		1/40	1/40	166	138	4750	1177	
		1/50	1/50	208	173	4750	1177	
		1/60	1/60	249	208	4750	1177	
		1/80	1/80	316	263	4750	1177	
		1/100	19/1880	395	328	4750	1177	
		1/120	1/120	473	395	4750	1177	
		* 1/160	1/160	554	526	5190	1275	
		* 1/200	1/200	554	554	5190	1275	
		* 1/240	1/240	554	554	5190	1275	
1.5 kW	55	1/5	1/5	41	34	4700	1177	P.417
		1/7.5	2/15	63	52	5340	1324	
		1/10	1/10	83	70	5780	1422	
		1/12.5	4/49	104	86	6130	1520	
		1/15	1/15	124	104	6320	1569	
		1/20	14/275	166	138	6320	1569	
		1/25	11/280	208	173	6320	1569	
		1/30	2/59	249	208	6320	1569	
		1/40	1/40	332	276	6320	1569	
		1/50	1/49	416	345	6320	1569	
		1/60	1/60	498	416	6320	1569	
		1/80	7/550	631	526	6420	1618	
		1/100	11/1120	789	658	6420	1618	
		1/120	1/118	947	789	7500	1863	
		* 1/160	7/1100	1030	1030	8330	2059	
		* 1/200	11/2240	1030	1030	9020	2256	
		* 1/240	1/236	1030	1030	9800	2452	
2.2 kW	55	1/5	1/5	61	51	4700	1177	P.417
		1/7.5	2/15	91	76	5340	1324	
		1/10	1/10	122	102	5780	1422	
		1/12.5	4/49	152	126	6130	1520	
		1/15	1/15	182	152	6320	1569	
		1/20	14/275	244	203	6320	1569	
		1/25	11/280	305	254	6320	1569	
		1/30	2/59	366	305	6320	1569	
		1/40	1/40	487	406	6320	1569	
		1/50	1/49	609	508	6320	1569	
		1/60	1/60	731	609	6320	1569	
		1/80	7/550	926	771	6420	1618	
		* 1/100	11/1120	1030	964	6420	1618	
		* 1/120	1/118	1030	1030	7500	1863	

FA Type <Right Angle Hollow Bore/FAS>

[Notes]

- The value of the allowable output shaft torque is the value when a 4 poles motor is used.
- When using an output shaft for a motor other than a 4 poles motor, the allowable output shaft torque value is calculated by multiplying the torque by the torque correction coefficient as shown on page 626.
- The key for the output shaft is not included.
- Allowable output shaft O.H.L. is the value at 20 mm from the end of the output shaft.
- Please refer to below figure for the rotational direction of the output shaft.
- The "*" mark indicates a limited torque type. Please make sure to check the allowable output shaft torque in the performance table.

■ Rotational Direction Relationship (When Viewed from the Flange Surface Side)

The rotational direction shown Below with arrow illustrates the rotation relationship between the output shaft / input and is no way illustrating limitations in rotational direction.

Type	Power	Reduction Ratio
Right Angle Hollow Bore/FAS Type	1.5 kW to 2.2 kW	1/5 to 1/30

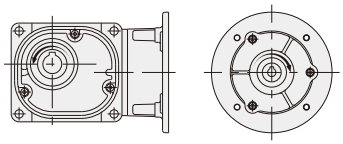

Type	Power	Reduction Ratio
Right Angle Hollow Bore/FAS Type	1.5 kW to 2.2 kW	1/40 to 1/240

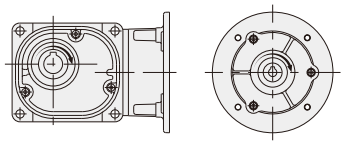

4 Poles Motor Power Class	Frame Size	Reduction Ratio	Actual Reduction Ratio	Allowable Output Shaft Torque N·m		Allowable Output Shaft O.H.L.	Allowable Output Shaft Thrust Load	Drawings
				50 Hz	60 Hz	N	N	
1.5 kW	55	1/5	1/5	41	34	4700	1177	P.418
		1/7.5	2/15	63	52	5340	1324	
		1/10	1/10	83	70	5780	1422	
		1/12.5	4/49	104	86	6130	1520	
		1/15	1/15	124	104	6320	1569	
		1/20	14/275	166	138	6320	1569	
		1/25	11/280	208	173	6320	1569	
		1/30	2/59	249	208	6320	1569	
		1/40	1/40	332	276	6320	1569	
		1/50	1/49	416	345	6320	1569	
		1/60	1/60	498	416	6320	1569	
		1/80	7/550	631	526	6420	1618	
		1/100	11/1120	789	658	6420	1618	
		1/120	1/118	947	789	7500	1863	
		* 1/160	7/1100	1030	1030	8330	2059	
		* 1/200	11/2240	1030	1030	9020	2256	
		* 1/240	1/236	1030	1030	9800	2452	
2.2 kW	55	1/5	1/5	61	51	4700	1177	P.418
		1/7.5	2/15	91	76	5340	1324	
		1/10	1/10	122	102	5780	1422	
		1/12.5	4/49	152	126	6130	1520	
		1/15	1/15	182	152	6320	1569	
		1/20	14/275	244	203	6320	1569	
		1/25	11/280	305	254	6320	1569	
		1/30	2/59	366	305	6320	1569	
		1/40	1/40	487	406	6320	1569	
		1/50	1/49	609	508	6320	1569	
		1/60	1/60	731	609	6320	1569	
		1/80	7/550	926	771	6420	1618	
		* 1/100	11/1120	1030	964	6420	1618	
		* 1/120	1/118	1030	1030	7500	1863	

4-2. Drawings

FS Type Right Angle Hollow Bore | Shaft Diameter **25** | **Flange** Mounting

<Figure 1>

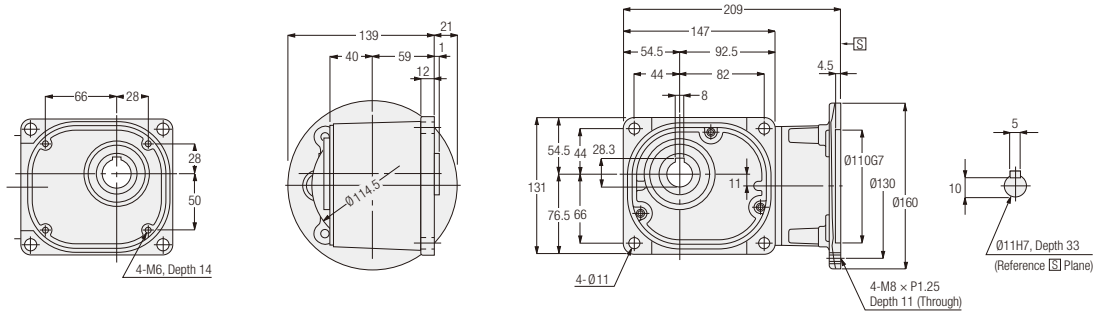

Motor Power Class	Part Number	Reduction Ratio	Figure Number	Approx. Weight (kg)
0.1 kW	FSS-25-∗∗∗-010	10, 12.5, 15, 20, 25, 30, 40, 50, 60, 80, 100, 120, 160, 200, 240	1	5.5

Note: The reduction ratio will be indicated as ∗∗∗ in the nomenclature.
Note: Please refer to page 982 for the details of the output shaft dimensions.
Note: Please refer to page 412 for the performance table.
Note: Please refer to page 630 for the details of the motor mounting area.

FS Type Right Angle Hollow Bore | Shaft Diameter **30** | **Flange** Mounting

<Figure 2>

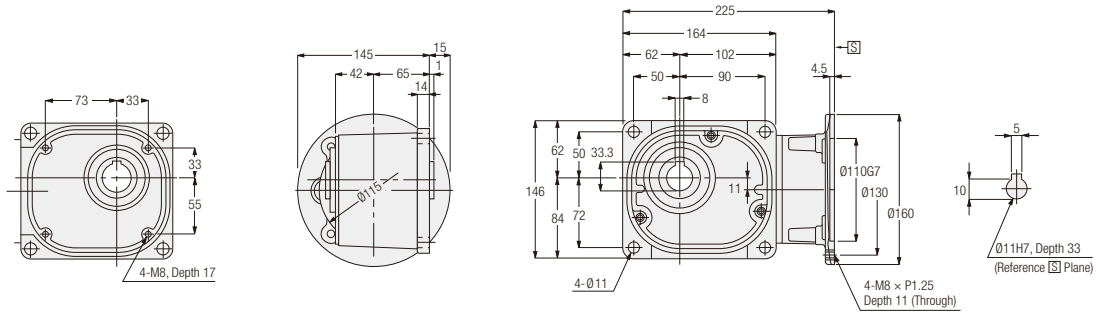

Motor Power Class	Part Number	Reduction Ratio	Figure Number	Approx. Weight (kg)
0.2 kW	FSS-30-∗∗∗-020	5, 7.5, 10, 12.5, 15, 20, 25, 30, 40, 50, 60, 80, 100, 120, 160, 200, 240	2	7.5

Note: The reduction ratio will be indicated as ∗∗∗ in the nomenclature.
Note: Please refer to page 982 for the details of the output shaft dimensions.
Note: Please refer to page 412 for the performance table.
Note: Please refer to page 630 for the details of the motor mounting area.

FS Type Right Angle Hollow Bore | Shaft Diameter 35 | Flange Mounting

<Figure 1>

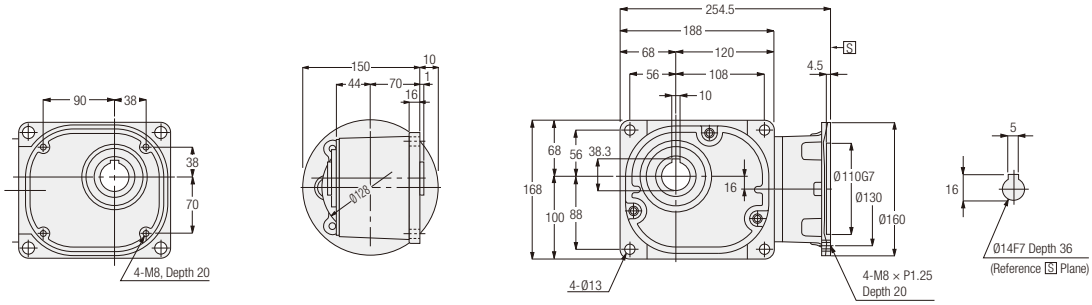

Motor Power Class	Part Number	Reduction Ratio	Figure Number	Approx. Weight (kg)
0.4 kW	FSS-35-∗∗∗-040	5, 7.5, 10, 12.5, 15, 20, 25, 30, 40, 50, 60, 80, 100, 120, 160, 200, 240	1	10

Note: The reduction ratio will be indicated as ∗∗∗ in the nomenclature.
Note: Please refer to page 982 for the details of the output shaft dimensions.
Note: Please refer to page 413 for the performance table.
Note: Please refer to page 630 for the details of the motor mounting area.

FS Type Right Angle Hollow Bore | Shaft Diameter 45 | Flange Mounting

<Figure 2>

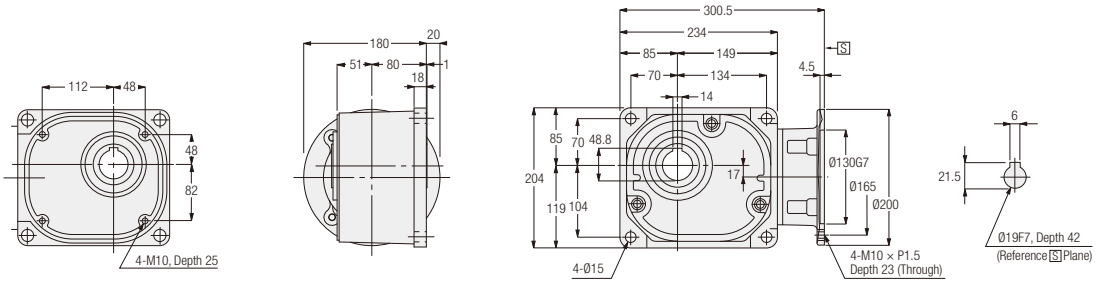

Motor Power Class	Part Number	Reduction Ratio	Figure Number	Approx. Weight (kg)
0.75 kW	FSS-45-∗∗∗-075	5, 7.5, 10, 12.5, 15, 20, 25, 30, 40, 50, 60, 80, 100, 120, 160, 200, 240	2	16

Note: The reduction ratio will be indicated as ∗∗∗ in the nomenclature.
Note: Please refer to page 982 for the details of the output shaft dimensions.
Note: Please refer to page 413 for the performance table.
Note: Please refer to page 630 for the details of the motor mounting area.

FS Type Right Angle Hollow Bore | Shaft Diameter 55 | **Flange** Mounting

<Figure 1>

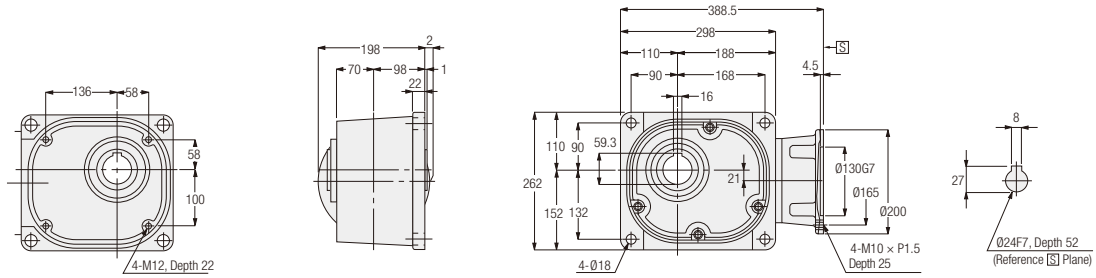

<Figure 2>

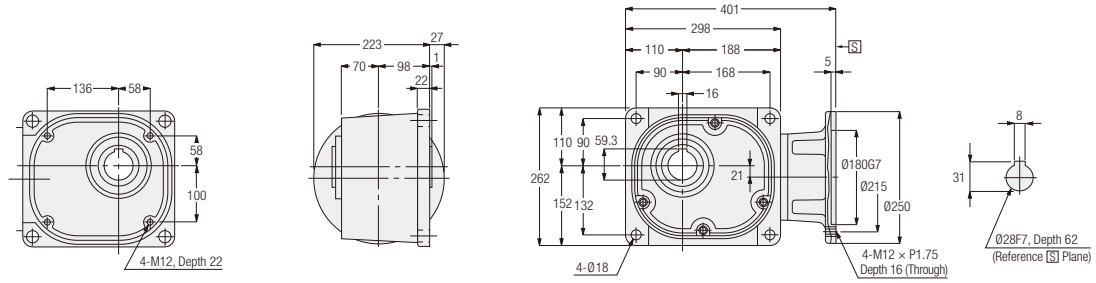

Motor Power Class	Part Number	Reduction Ratio	Figure Number	Approx. Weight (kg)
1.5 kW	FSS-55-∗∗∗-150	5, 7.5, 10, 12.5, 15, 20, 25, 30, 40, 50, 60, 80, 100, 120, 160, 200, 240	1	54
2.2 kW	FSS-55-∗∗∗-220	5, 7.5, 10, 12.5, 15, 20, 25, 30, 40, 50, 60, 80, 100, 120	2	55

Note: The reduction ratio will be indicated as ∗∗∗ in the nomenclature.
Note: Please refer to page 982 for the details of the output shaft dimensions.
Note: Please refer to page 413 for the performance table.
Note: Please refer to page 630 for the details of the motor mounting area.

FAS Type Right Angle Hollow Bore | Shaft Diameter 55 | Flange Mounting

<Figure 1>

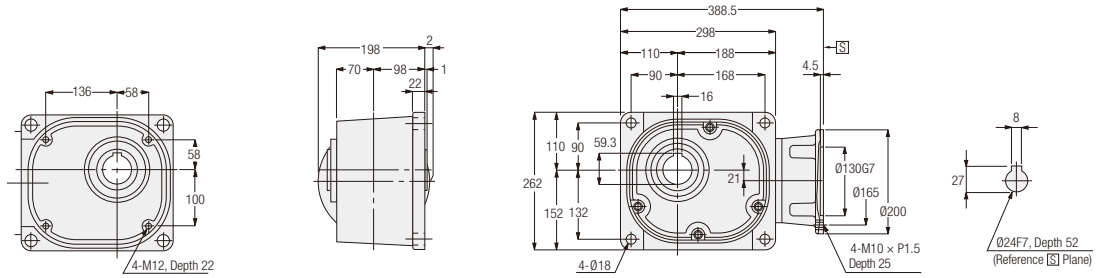

<Figure 2>

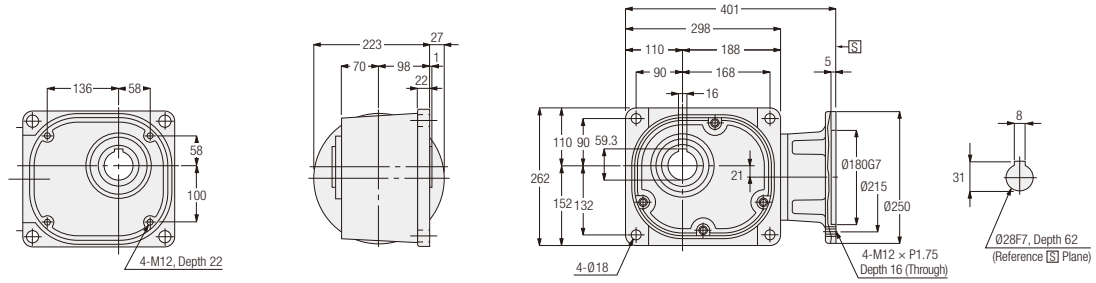

Motor Power Class	Part Number	Reduction Ratio	Figure Number	Approx. Weight (kg)
1.5 kW	FASS-55-∗∗∗-150	5, 7.5, 10, 12.5, 15, 20, 25, 30, 40, 50, 60, 80, 100, 120, 160, 200, 240	1	36.2
2.2 kW	FASS-55-∗∗∗-220	5, 7.5, 10, 12.5, 15, 20, 25, 30, 40, 50, 60, 80, 100, 120	2	37.2

Note: The reduction ratio will be indicated as ∗∗∗ in the nomenclature.
Note: Please refer to page 982 for the details of the output shaft dimensions.
Note: Please refer to page 414 for the performance table.
Note: Please refer to page 630 for the details of the motor mounting area.

F2/F3 Type

Concentric Right Angle Hollow Bore/ Concentric Right Angle Shaft

Standard Specification
Model and Type Codes
Standard Model Lineup

INDUCTION GEARMOTORS

P.444 **1. Gearmotors/Gearmotors with Brake**
- **1-1. Motor Characteristics Table**
- **1-2. Performance Table**
- **1-3. Drawings**

P.480 **2. IP65 Gearmotors/ IP65 Gearmotors with Brake**
- **2-1. Motor Characteristics Table**
- **2-2. Performance Table**
- **2-3. Drawings**

P.494 **3. Speed Control Gearmotors**
- **3-1. Properties and Motor Characteristics Table**
- **3-2. Graph for Speed Characteristics**
- **3-3. Performance Table**
- **3-4. Drawings**

P.504 **4. Gearboxes (Double Shaft Type)**
- **4-1. Performance Table**
- **4-2. Drawings**

P.510 **5. S-Type Gearboxes (Type Which Can Be Equipped with Designated Motor)**
- **5-1. Performance Table**
- **5-2. Drawings**

Standard Specification

F2 Type Gearmotors/Gearmotors with Brake <Concentric Right Angle Hollow Bore/F2S, Concentric Right Angle Shaft/F2F>

Series		MINI	
Motor Unit	Number of Phases	3-Phase	1-Phase
	Power	15 W to 90 W	
	Power Supply	Standard voltage 200 V/50 Hz, 200 V/60 Hz, 220 V/60 Hz High Voltage (400 V Class) 380 V/50 Hz, 400 V/50 Hz, 400 V/60 Hz, 440 V/60 Hz	Standard voltage 100 V/50 Hz, 100 V/60 Hz High Voltage (200 V Class) 200 V/50 Hz, 200 V/60 Hz
	Insulation Class	Ins. B	
	Startup Method	Direct Power Input	Capacitor Run
	Cooling Method	Totally Enclosed Non-Ventilated (TENV) (IC410) or Totally Enclosed Fan Cooled (TEFC) (IC411)	
	Number of Motor Poles	4	
	Rating	Continuous	
Gearbox	Reduction Method	Hypoid Gear and Helical Gear	
	Lubrication Type	Grease Lubrication (Maintenance-free)	
	Output Shaft	JIS Key (JIS B 1301-1996) (Plain form) * The key material is included with concentric right angle shaft types.	
	Output Shaft Material	Carbon Steel	
	Case Material	Aluminum	
Ambient Conditions	Ambient Temperature	-10 °C to 40 °C	
	Ambient Humidity	85 % max (No Condensation)	
	Altitude	1,000 m max	
	Installation Environment	A place free from corrosive gas, explosive gas and/or vapor. Well ventilated place with no dust.	
	Installation Place	Indoors	
Paint	Paint Color	Gray	
Mounting Direction		No limitations in mounting angle	
Motor Characteristics		P.444 (F2S Type), P.447 (F2F Type)	
Performance Table		P.449 (F2S Type), P.455 (F2F Type)	
Drawings		P.460	

F3 Type Gearmotors/Gearmotors with Brake <Concentric Right Angle Hollow Bore/F3S, Concentric Right Angle Shaft/F3F>

Series		MID				
Motor Unit	Number of Phases	3-Phase				1-Phase (Note 4)
	Power	0.1 kW to 2.2 kW				0.1 kW to 0.4 kW (1/8 HP to 1/2 HP)
	Power Supply	Type	Global Standards Conformance	Power Supply/Frequency		Standard Voltage 100 V/50 Hz, 100 V/60 Hz High Voltage (200 V Class) 200 V/50 Hz, 200 V/60 Hz
		Standard Voltage	UL/CE/CCC	200 V/50 Hz, 200 V/60 Hz, 220 V/60 Hz		
		High Voltage (400 V Class)	UL/CE/CCC	380 V/50 Hz, 400 V/50 Hz, 400 V/60 Hz, 440 V/60 Hz		
		Special Voltage	South Korea/Taiwan UL/CE/CCC	220 V/60 Hz, 380 V/60 Hz (Dual Voltage)		
			China UL/CE/CCC	220 V/50 Hz, 230 V/50 Hz, 380 V/50 Hz (Dual Voltage)		
			China/South Korea/Taiwan UL/CE/CCC	220 V/50 Hz, 220 V/60 Hz, 380 V/50 Hz, 380 V/60 Hz (Dual Voltage) (Note 1)		
			Europe/North America UL/cUL/CE/CCC	415 V/50 Hz, 440 V/50 Hz, 480 V/60 Hz		
			North America/ Europe UL/cUL/CE/CCC	230 V/60 Hz, 460 V/60 Hz, 400 V/50 Hz (Dual Voltage) (Note 2)		
			North America/ Europe UL/cUL/CE/CCC	208 V/60 Hz, 230 V/60 Hz, 460 V/60 Hz, 400 V/50 Hz (Note 3)		
			Canada UL/cUL	575 V/60 Hz		
	Insulation Class	Ins. F				Ins. B
	Startup Method	Direct Power Input				Capacitor Start (0.1 kW: Capacitor Run)
	Cooling Method	Totally Enclosed Fan Cooled (TEFC) (IC411) (All of 0.1 kW and 0.2 kW models without brake are totally enclosed non-ventilated (TENV) (IC410))				Totally Enclosed Fan Cooled (TEFC) (IC411)
	Number of Motor Poles	4				
	Rating	Power	Motor Efficiency	UL/CE Standard	CCC Standard	Continuous
		0.1 kW	IE1	Continuous	Continuous	
		0.2 kW, 0.4 kW (Note 5)	IE2	Continuous	Short Time (120 minutes)	
		0.75 kW or above	IE3, GB3	Continuous	Continuous	
Gearbox	Reduction Method	Hypoid Gear and Helical Gear				
	Lubrication Type	Grease Lubrication (Maintenance-free)				
	Output Shaft	JIS Key (JIS B 1301-1996) (Plain form) * The key material is included with concentric right angle shaft types.				
	Output Shaft Material	Carbon Steel				
	Case Material	Aluminum				
Ambient Conditions	Ambient Temperature	-10 °C to 40 °C (Note 6)				
	Ambient Humidity	85 % max (No Condensation)				
	Altitude	1,000 m max				
	Installation Environment	A well ventilated place free from corrosive gas, explosive gas, vapor and/or chemicals Not to be exposed to direct rain. Not to be exposed to direct sunlight. The brake should not to be exposed to water, dust, oil/grease, or oil mist. Models with water protection rating IPX0 shall not be exposed directly to water.				
Paint	Paint Color	Gray				
Protective Structure (Note 7)		IP44 or IP40				IP40 or IP44
Mounting Direction		No limitations in mounting angle				
Motor Characteristics		P.445 (F3S Type), P.448 (F3F Type)				P.446
Performance Table		P.451 (F3S Type), P.457 (F3F Type)				P.454
Drawings		P.464				P.465

Note 1: Applicable motor power is 0.1 kW to 0.75 kW.
Note 2: Applicable motor power is 0.75 kW to 2.2 kW.
Note 3: Applicable motor power is 0.1 kW to 0.4 kW.
Note 4: Concentric right angle shaft types are not available in Single-Phase motors.
Note 5: For CCC Standard, Three-phase 0.2 kW and Three-phase 0.4 kW are certified under limited duty cycle. Please be cautious upon selecting the product.
Note 6: The ambient temperature for Single-phase motors with a power of 0.1 kW (capacitor run) is 0 °C to 40 °C.
Note 7: The protective structure differs depending on the model.

F2/F3 Type IP65 Gearmotors/IP65 Gearmotors with Brake <Concentric Right Angle Hollow Bore/F2S, F3S>

Series		MINI		MID			
Motor Unit	Number of Phases	3-Phase	1-Phase	3-Phase			
	Power	15 W to 90 W	15 W to 90 W	0.1 kW to 2.2 kW			
	Power Supply	Standard Voltage 200 V/50 Hz, 200 V/60 Hz, 220 V/60 Hz	Standard Voltage 100 V/50 Hz, 100 V/60 Hz	Type	Global Standards Conformance	Power Supply/ Frequency	
				Standard Voltage	UL/CE/CCC	200 V/50 Hz, 200 V/60 Hz, 220 V/60 Hz	
				High Voltage (400 V Class)	UL/CE/CCC	380 V/50 Hz, 400 V/50 Hz, 400 V/60 Hz, 440 V/60 Hz	
				Special Voltage	South Korea/ Taiwan UL/CE/CCC	220 V/60 Hz, 380 V/60 Hz (Dual Voltage)	
					China UL/CE/CCC	220 V/50 Hz, 230 V/50 Hz, 380 V/50 Hz (Dual Voltage)	
					China/South Korea/Taiwan UL/CE/CCC	220 V/50 Hz, 220 V/60 Hz, 380 V/50 Hz, 380 V/60 Hz (Dual Voltage) (Note 1)	
					Europe/North America UL/cUL/CE/CCC	415 V/50 Hz, 440 V/50 Hz, 480 V/60 Hz	
					North America/ Europe UL/cUL/CE/CCC	230 V/60 Hz, 460 V/60 Hz, 400 V/50 Hz (Dual Voltage) (Note 2)	
					North America/ Europe UL/cUL/CE/CCC	208 V/60 Hz, 230 V/60 Hz, 460 V/60 Hz, 400 V/50 Hz (Note 3)	
					Canada UL/cUL	575 V/60 Hz	
	Insulation Class	Ins. B		Ins. F			
	Startup Method	Direct Power Input	Capacitor Run	Direct Power Input			
	Cooling Method	Totally Enclosed Non-Ventilated (TENV) (IC410)		Totally Enclosed Fan Cooled (TEFC) (IC411) (All of 0.1 kW and 0.2 kW models without brake are totally enclosed non-ventilated (TENV) (IC410))			
	Number of Motor Poles	4					
	Rating	Continuous		Power	Motor Efficiency	UL/CE Standard	CCC Standard
				0.1 kW	IE1	Continuous	Continuous
				0.2 kW, 0.4 kW (Note 4)	IE2	Continuous	Short Time (120 minutes)
				0.75 kW or above	IE3, GB3	Continuous	Continuous
Gearbox	Reduction Method	Hypoid Gear and Helical Gear					
	Lubrication Type	Grease Lubrication (Maintenance-free)					
	Output Shaft	JIS Key (JIS B 1301-1996) (Plain form)					
	Output Shaft Material	Stainless Steel		Stainless steel or carbon steel			
	Case Material	Aluminum		Aluminum (Frame size 50: Aluminum Casting, Frame No. 55: Cast Iron)			
Ambient Conditions	Ambient Temperature	-10 °C to 40 °C					
	Ambient Humidity	100 % max (No Condensation)					
	Altitude	1,000 m max					
	Installation Environment	A place free from corrosive gas, explosive gas and/or vapor. Not to be exposed to strong rain or wind. Not to be exposed to direct sunlight. Not suitable for use under water, under environments with exposure to high pressure such as water splashes, and under exposure to cleansing chemicals.					
Paint	Paint Color	Gray					
Protective Structure		IP65					
Mounting Direction		No limitations in mounting angle					
Motor Characteristics		P.480		P.481			
Performance Table		P.482		P.484			
Drawings		P.487		P.489			

Note 1: Applicable motor power is 0.1 kW to 0.75 kW.
Note 2: Applicable motor power is 0.75 kW to 2.2 kW.
Note 3: Applicable motor power is 0.1 kW to 0.4 kW.
Note 4: For CCC Standard, Three-phase 0.2 kW and Three-phase 0.4 kW are certified under limited duty cycle. Please be cautious upon selecting the product.

F2 Type Speed Control Gearmotors <Concentric Right Angle Hollow Bore/F2S, Concentric Right Angle Shaft/F2F>

Series		MINI
Motor Unit	Number of Phases	1-Phase
	Power	15 W to 90 W
	Power Supply	Standard Voltage 100 V/50 Hz, 100 V/60 Hz High Voltage (200 V Class) 200 V/50 Hz, 200 V/60 Hz
	Insulation Class	Ins. B
	Startup Method	Capacitor Run
	Cooling Method	Totally Enclosed Non-Ventilated (TENV) (IC410) (60 to 90 W: provided with a forced fan)
	Number of Motor Poles	4
	Rating	Continuous
Gearbox	Reduction Method	Hypoid Gear and Helical Gear
	Lubrication Type	Grease Lubrication (Maintenance-free)
	Output Shaft	JIS Key (JIS B 1301-1996) (Plain form)
	Output Shaft Material	Carbon Steel
	Case Material	Aluminum
Ambient Conditions	Ambient Temperature	-10 °C to 40 °C
	Ambient Humidity	85 % max (No Condensation)
	Altitude	1,000 m max
	Installation Environment	A place free from corrosive gas, explosive gas and/or vapor. Well ventilated place with no dust.
	Installation Place	Indoors
Paint	Paint Color	Gray
Mounting Direction		No limitations in mounting angle
Motor Characteristics		P.494
Performance Table		P.496
Drawings		P.500

F3 Type Gearboxes (Double Shaft Type) <Concentric Right Angle Hollow Bore/F3S>

Series		MID
4 Poles Motor Power Class		0.1 kW Class to 2.2 kW Class
Gearbox	Reduction Method	Hypoid Gear and Helical Gear
	Lubrication Type	Grease Lubrication (Maintenance-free)
	Output Shaft	JIS Key (JIS B 1301-1996 plain form) * The key is not included with the motor.
	Input Shaft	JIS Key (JIS B 1301-1996 plain form) * The key is not included with the motor.
	Output Shaft Material	Carbon Steel
	Input Shaft Material	Carbon Steel
	Case Material	Aluminum
Ambient Conditions	Ambient Temperature	-10 °C to 40 °C
	Ambient Humidity	85 % max (No Condensation)
	Altitude	1,000 m max
	Installation Environment	A place free from corrosive gas, explosive gas and/or vapor. Well ventilated place with no dust.
	Installation Place	Indoors
Paint	Paint Color	Gray
Mounting Direction		No limitations in mounting angle
Performance Table		P.504
Drawings		P.506

F3 Type S-Type Gearboxes <Concentric Right Angle Hollow Bore/F3S>

Series		MID
4 Poles Motor Power Class		0.1 kW Class to 2.2 kW Class
Gearbox	Reduction Method	Hypoid Gear and Helical Gear
	Lubrication Type	Grease Lubrication (Maintenance-free)
	Output Shaft	JIS Key (JIS B 1301-1996) (Plain form) * Key not included.
	Output Shaft Material	Carbon Steel
	Case Material	Aluminum
Ambient Conditions	Ambient Temperature	-10 °C to 40 °C
	Ambient Humidity	85 % max (No Condensation)
	Altitude	1,000 m max
	Installation Environment	A place free from corrosive gas, explosive gas and/or vapor. Well ventilated place with no dust.
	Installation Place	Indoors
Paint	Paint Color	Gray
Mounting Direction		No limitations in mounting angle
Performance Table		P.510
Drawings		P.512

Model and Type Codes

F2 Type Gearmotors/Gearmotors with Brake MINI Series <Concentric Right Angle Hollow Bore/F2S, Concentric Right Angle Shaft/F2F>

Mounting Type	Motor Type		Frame Size	Shaft Arrangement		Reduction Ratio		Motor Power	Supply Voltage	Terminal Box	Option	Option Code
F2S	M	–	12		–	30	–	T25				
F2F	B	–	18	L	–	200	–	S60	W	C	X	T6
①	②		③	④		⑤		⑥	⑦	⑧	⑨	⑩

①Mounting Type	F2S : Concentric Right Angle Hollow Bore		
	F2F : Concentric Right Angle Shaft		
②Motor Type	M : With Motor		
	B : Brakemotor		
	MR : Motor with Simple Brake (option)		
③Frame Size and Output Shaft Diameter	Output Shaft Diameter		
④Shaft Arrangement	Concentric Right Angle Hollow Bore	Blank	
	Concentric Right Angle Shaft	Viewing from the input shaft, the output shaft would be on the left side 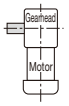	Viewing from the input shaft, the output shaft would be on the both sides 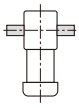
		L	T
⑤Reduction Ratio	10: 1/10 to 240: 1/240		
⑥Motor Power	T15 : 3-Phase 15 W		
	T25 : 3-Phase 25 W		
	T40 : 3-Phase 40 W		
	T60 : 3-Phase 60 W		
	T90 : 3-Phase 90 W		
	S15 : 1-Phase 15 W		
	S25 : 1-Phase 25 W		
	S40 : 1-Phase 40 W		
	S60 : 1-Phase 60 W		
	S90 : 1-Phase 90 W		
⑦Supply Voltage (High Voltage (400 V Class): is Option)	Blank : Standard Voltage 3-Phase: 200 V/50 Hz, 200 V/60 Hz, 220 V/60 Hz 1-Phase: 100 V/50 Hz, 100 V/60 Hz		
	W : High Voltage 3-Phase: 380 V/50 Hz, 400 V/50 Hz, 400 V/60 Hz, 440 V/60 Hz 1-Phase: 200 V/50 Hz, 200 V/60 Hz		
⑧Terminal Box (Option)	Blank : Flying Leads (Standard Type)		
	T : T Type Terminal Box		
	K : K Type Terminal Box		
	C : Terminal Box with Built-in Rectifier for Gearmotor with Brake (Note 1)		
⑨Option	Blank : Standard Specification		
	X : Special Specification Code		
⑩Option Code (Note 2)	Lead Wires/Terminal Box Position Code Please refer to the list of option codes on page 581 for details.		

Note 1: When using an inverter for a C type terminal box, be sure to designate an AC switching (A) connection.
Please refer to page 591 for details.
Note 2: The option code will not be shown in the nomenclature on the nameplate. But it will be shown in the Option code row of the nameplate.

■ F2F (right angle shaft) shaft arrangement

The L shaft of the F2F (concentric right angle shaft) is as shown in [Figure-1]. The F2 type is designed for concentric flange mount on both sides, and the output shaft can therefore be positioned on the right side as shown in [Figure-2] by rotating the gearmotor to 180 °.
In this case, however, the lead wires will be in the lower position. If you want to set the lead wires in the upper position for the convenience of use, place an order for the lead wire lower position (option code “T6”) for a standard product [Figure-1]. By rotating the gearmotor to 180 ° in this state, the output shaft will be positioned on the right side with the lead wires in the upper position. Please refer to page 581 for changes of the lead wire position.

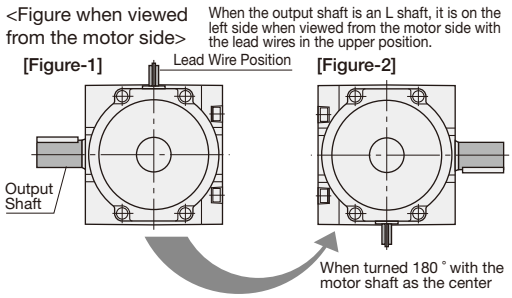

F3 Type Gearmotors/Gearmotors with Brake MID Series <Concentric Right Angle Hollow Bore/F3S, Concentric Right Angle Shaft/F3F> [3-Phase]

Gearhead Type					Motor Type							Brake Specifications	Option	
Mounting Type	Frame Size	Shaft Arrangement	Reduction Ratio		Motor Type	Motor Specifications	Motor Power	Number of Phases	Supply Voltage	Standards	Terminal Box	Brake	Option	Option Code
F3F	18	T	15	–	M	M	01	T	N	N	T	N		
F3S	35	N	100	–	M	M	04	T	W	N	T	B4	X	AA
F3S	55	N	240	–	M	R	15	T	K	N	T	B2	X	T9HZ
①	②	③	④		⑤	⑥	⑦	⑧	⑨	⑩	⑪	⑫	⑬	⑭

①Mounting Type	F3S : Concentric Right Angle Hollow Bore			
	F3F : Concentric Right Angle Shaft			
②Frame Size and Output Shaft Diameter	Output Shaft Diameter			
③Shaft Arrangement	Material	Shaft Arrangement		
		Right Angle Hollow Bore	Right Angle Shaft	
	Carbon Steel	N	Viewing from the input shaft (↑), the output shaft would be on the left side	Viewing from the input shaft (↑), the output shaft would be on the right side / Viewing from the input shaft (↑), the output shaft would be on the both sides
			L	R / T
④Reduction Ratio	5: 1/5 to 240: 1/240			
⑤Motor Type	M : Standard Induction Motor (IP40 or IP44)			
⑥Motor Specifications (Note 1)	M : IE1 Efficiency Ins. F (0.1 kW) IE2 Efficiency Ins. F (0.2 kW to 0.4 kW)			
	R : IE3 Efficiency Ins. F (0.75 kW to 2.2 kW)			
⑦Motor Power	01 : 0.1 kW			
	02 : 0.2 kW			
	04 : 0.4 kW			
	08 : 0.75 kW			
	15 : 1.5 kW			
	22 : 2.2 kW			
⑧Number of Phases	T : 3-Phase			

⑨Supply Voltage (Note 2)		⑫Brake Specifications (Note 3)				
		N	B2	B4	J2	J4
⑨Supply Voltage	N : 200 V/50 Hz, 200 V/60 Hz, 220 V/60 Hz	○	○		○	
	W : 380 V/50 Hz, 400 V/50 Hz, 400 V/60 Hz, 440 V/60 Hz	○		○		○
	K : 220 V/60 Hz, 380 V/60 Hz	○	○	○	○	○
	C : 220 V/50 Hz, 230 V/50 Hz, 380 V/50 Hz	○	○	○	○	○
	D : 220 V/50 Hz, 220 V/60 Hz, 380 V/50 Hz, 380 V/60 Hz	○	○	○	○	○
	E : 415 V/50 Hz, 440 V/50 Hz, 480 V/60 Hz	○		○		○
	U : 230 V/60 Hz, 460 V/60 Hz, 400 V/50 Hz	○	○	○	○	○
	A : 208 V/60 Hz, 230 V/60 Hz, 460 V/60 Hz, 400 V/50 Hz	○	○	○	○	○
	M : 575 V/60 Hz	○	○		○	

⑩Standards	N : CE/UL/CCC
	A : UL Note: Supply Voltage : M (575 V/60 Hz) only
⑪Terminal Box (Note 4)	T : T Type Terminal Box (Steel Plate)
	N : Flying Leads
⑫Brake Specifications (Note 5)	N : No Brake
	B2 : 200 V Class Brake
	B4 : 400 V Class Brake
	J2 : 200 V Class Brake with Manual Brake Release Lever (optional)
	J4 : 400 V Class Brake with Manual Brake Release Lever (optional)
⑬Option	Blank : Standard Specification
	X : Special Specification Code
⑭Option Code (Note 6)	Built-in Rectifier Connection Code Please refer to the list of option codes on page 561 for details.
	Terminal Box Position Code Please refer to the list of option codes on page 583 for details.
	Please refer to the option code list on page 1012 for codes used for other special options.

Note 1: For CCC Standard, 0.2 kW and 0.4 kW are certified under limited duty cycle. Please be cautious upon selecting the product.
Note 2: Refer to the following for the corresponding motor powers for supply voltages.
Supply voltage D: 0.1 kW to 0.75 kW Supply voltage U: 0.75 kW to 2.2 kW Supply voltage A: 0.1 kW to 0.4 kW
Dual voltage is not available for gearmotors with brake and supply the voltage code “K”, “C”, “D”, “U” and “A”.
The motor voltage is limited by the brake specifications.
Note 3: ○ indicates a brake specification that can be manufactured.
Note 4: With regard to the types of flying leads, only supply voltage codes N are covered.
Note 5: The rectifier is included with the product.
Note 6: The option code will not be shown in the nomenclature on the nameplate. But it will be shown in the Option code row of the nameplate.

Model and Type Codes

F3 Type Gearmotors/Gearmotors with Brake MID Series <Concentric Right Angle Hollow Bore/ F3S> [1-Phase]

Gearhead Type					Motor Type							Brake Specifications	Option	
Mounting Type	Frame Size	Shaft Arrangement	Reduction Ratio		Motor Type	Motor Specifications	Motor Power	Number of Phases	Supply Voltage	Standards	Terminal Box	Brake	Option	Option Code
F3S	20	N	5	–	M	M	01	S	N	J	A	N		
F3S	30	N	120	–	M	M	02	C	W	J	A	B2		
F3S	35	N	80	–	M	M	04	C	N	J	A	B2	X	T9HZ
①	②	③	④		⑤	⑥	⑦	⑧	⑨	⑩	⑪	⑫	⑬	⑭

①Mounting Type (Note 1)	F3S : Concentric Right Angle Hollow Bore
②Frame Size and Output Shaft Diameter	Output Shaft (Internal Diameter)
③Shaft Arrangement	N : Concentric Right Angle Hollow Bore
④Reduction Ratio	5: 1/5 to 240: 1/240
⑤Motor Type	M : Standard Induction Motor (IP44 or IP40)
⑥Motor Specifications	M : IE1 Efficiency Ins. B
⑦Motor Power	01 : 0.1 kW
	02 : 0.2 kW
	04 : 0.4 kW
⑧Number of Phases	S : 1-Phase Capacitor Run (Note 2)
	C : 1-Phase Capacitor Start
⑨Supply Voltage (Note 3)	N : 100 V/50 Hz, 100 V/60 Hz
	W : 200 V/50 Hz, 200 V/60 Hz
⑩Standards	J : No Standards
⑪Terminal Box	A : A Type Terminal Box (Aluminum)
⑫Brake Specifications	N : No Brake
	B2 : 200 V Class Brake
⑬Option	Blank : Standard Specification
	X : Special Specification Code
⑭Option Code (Note 4)	Terminal Box Position Code Please refer to page 585 for details.

Note 1: Concentric right angle shaft types are not available.
Note 2: 1-phase capacitor run type motors have built-in thermal protectors.
Refer to page 643 for the cautions for use.
Note 3: For voltages/frequencies not listed above, please contact your nearest Sales Office or the CS Center.
Note 4: The option code will not be shown in the nomenclature on the nameplate. But it will be shown in the Option code row of the nameplate.

F2 Type IP65 Gearmotors/IP65 Gearmotors with Brake MINI Series <Concentric Right Angle Hollow Bore/ F2S>

Mounting Type	Motor Type		Frame Size		Reduction Ratio		Motor Power	Option	Option Code
F2S	W	–	12	–	30	–	T25		
F2S	V	–	15	–	200	–	S40	X	H3
①	②		③		④		⑤	⑥	⑦

①Mounting Type (Note 1)	F2S : Concentric Right Angle Hollow Bore
②Motor Type	W : IP65 Motor
	V : IP65 Brakemotor
③Frame Size and Output Shaft Diameter	Output Shaft Diameter
④Reduction Ratio	10: 1/10 to 240: 1/240
⑤Motor Power and Supply Voltage/ Frequency	T15 : 3-Phase 15 W
	T25 : 3-Phase 25 W
	T40 : 3-Phase 40 W
	T60 : 3-Phase 60 W
	T90 : 3-Phase 90 W
	S15 : 1-Phase 15 W
	S25 : 1-Phase 25 W
	S40 : 1-Phase 40 W
	3-Phase : 200 V/50 Hz, 200 V/60 Hz, 220 V/60 Hz 1-Phase : 100 V/50 Hz, 100 V/60 Hz
⑥Option	Blank : Standard Specification
	X : Special Specification Code
⑦Option Code (Note 2)	Cabtyre Cable Position Code Please refer to the list of option codes on page 581 for details.

Note 1: Concentric right angle shaft types are not available.
Note 2: The option code will not be shown in the nomenclature on the nameplate. But it will be shown in the Option code row of the nameplate.

F3 Type IP65 Gearmotors/IP65 Gearmotors with Brake MID Series <Concentric Right Angle Hollow Bore/ F3S> [3-Phase]

Gearhead Type					Motor Type							Brake Specifications	Option	
Mounting Type	Frame Size	Shaft Arrangement	Reduction Ratio		Motor Type	Motor Specifications	Motor Power	Number of Phases	Supply Voltage	Standards	Terminal Box	Brake	Option	Option Code
F3S	20	N	15	–	W	M	01	T	N	N	E	N		
F3S	35	S	100	–	W	M	04	T	W	N	E	V4	X	AA
F3S	55	N	240	–	W	R	15	T	K	N	E	N		
①	②	③	④		⑤	⑥	⑦	⑧	⑨	⑩	⑪	⑫	⑬	⑭

①Mounting Type (Note 1)	F3S : Concentric Right Angle Hollow Bore				
②Frame Size and Output Shaft Diameter	Output Shaft Diameter				
③Shaft Arrangement	Material	Shaft Arrangement Right Angle Hollow Bore			
	Carbon Steel	N			
	Stainless Steel	S			
④Reduction Ratio	5: 1/5 to 240: 1/240				
⑤Motor Type	W : IP65 Induction Motor				
⑥Motor Specifications (Note 2)	M : IE1 Efficiency Ins. F (0.1 kW) IE2 Efficiency Ins. F (0.2 kW to 0.4 kW)				
	R : IE3 Efficiency Ins. F (0.75 kW to 2.2 kW)				
⑦Motor Power	01 : 0.1 kW				
	02 : 0.2 kW				
	04 : 0.4 kW				
	08 : 0.75 kW				
	15 : 1.5 kW				
	22 : 2.2 kW				
⑧Number of Phases (Note 3)	T : 3-Phase				
⑨Supply Voltage	⑨Supply Voltage (Note 4)	⑫Brake Specifications (Note 5)			
		N	V2	V4	
	N : 200 V/50 Hz, 200 V/60 Hz, 220 V/60 Hz	○	○		
	W : 380 V/50 Hz, 400 V/50 Hz, 400 V/60 Hz, 440 V/60 Hz	○		○	
	K : 220 V/60 Hz, 380 V/60 Hz	○	○	○	
	C : 220 V/50 Hz, 230 V/50 Hz, 380 V/50 Hz	○	○	○	
	D : 220 V/50 Hz, 220 V/60 Hz, 380 V/50 Hz, 380 V/60 Hz	○	○	○	
	E : 415 V/50 Hz, 440 V/50 Hz, 480 V/60 Hz	○		○	
	U : 230 V/60 Hz, 460 V/60 Hz, 400 V/50 Hz	○	○	○	
	A : 208 V/60 Hz, 230 V/60 Hz, 460 V/60 Hz, 400 V/50 Hz	○	○	○	
	M : 575 V/60 Hz	○	○		
⑩Standards	N : CE/UL/CCC				
	A : UL * Supply Voltage : M (575 V/60 Hz) only				
⑪Terminal Box	E : E Type Terminal Box (Aluminum)				
⑫Brake Specifications	N : No Brake				
	V2 : IP65 200 V Class Brake (Note 6)				
	V4 : IP65 400 V Class Brake (Note 6)				
⑬Option	Blank : Standard Specification				
	X : Special Specification Code				
⑭Option Code (Note 7)	Built-in Rectifier Connection Code Please refer to the list of option codes on page 561 for details.				
	Terminal Box Position Code Please refer to the list of option codes on page 583 for details.				
	Please refer to the option code list on page 1012 for codes used for other special options.				

Note 1: Concentric right angle shaft types are not available.
Note 2: For CCC Standard, 0.2 kW and 0.4 kW are certified under limited duty cycle. Please be cautious upon selecting the product.
Note 3: Single-phase types are not available.
Note 4: Refer to the following for the corresponding motor powers for supply voltages.
Supply voltage D: 0.1 kW to 0.75 kW Supply voltage U: 0.75 kW to 2.2 kW Supply voltage A: 0.1 kW to 0.4 kW
Dual voltage is not available for gearmotors with brake and supply the voltage code “K”, “C”, “D”, “U” and “A”.
The motor voltage is limited by the brake specifications.
Note 5: ○ indicates a brake specification that can be manufactured.
Note 6: IP65 gearmotors with a brake are not available with motor powers of 1.5 kW and 2.2 kW.
Note 7: The option code will not be shown in the nomenclature on the nameplate. But it will be shown in the Option code row of the nameplate.

F2 Type Speed Control Gearmotors MINI Series <Concentric Right Angle Hollow Bore/F2S, Concentric Right Angle Shaft/F2F> [1-Phase]

Mounting Type	Motor Type		Frame Size	Shaft Arrangement		Reduction Ratio		Motor Power	Supply Voltage	Terminal Box	Option	Option Code
F2S	U	–	12		–	30	–	S25				
F2F	P	–	18	T	–	240	–	S90	W	C	X	
①	②		③	④		⑤		⑥	⑦	⑧	⑨	⑩

①Mounting Type	F2S : Concentric Right Angle Hollow Bore		
	F2F : Concentric Right Angle Shaft		
②Motor Type	U : U Type with Speed Control Motor (Controller Set)		
	P : P Type with Speed Control Motor (Controller: Sold Separately)		
③Frame Size and Output Shaft Diameter	Output Shaft Diameter		
④Shaft Arrangement	Concentric Right Angle Hollow Bore	Blank	
	Concentric Right Angle Shaft	Viewing from the input shaft, the output shaft would be on the left side 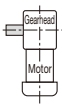	Viewing from the input shaft, the output shaft would be on the both sides 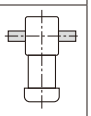
		L	T
⑤Reduction Ratio	10: 1/10 to 240: 1/240		
⑥Motor Power	S15 : 1-Phase 15 W		
	S25 : 1-Phase 25 W		
	S40 : 1-Phase 40 W		
	S60 : 1-Phase 60 W		
	S90 : 1-Phase 90 W		
⑦Supply Voltage (High Voltage (200 V Class): is Option)	Blank : Standard Voltage 1-Phase 100 V/50 Hz, 100 V/60 Hz		
	W : High Voltage 1-Phase 200 V/50 Hz, 200 V/60 Hz		
⑧Terminal Box (Option) (Note 1)	Blank : Flying Leads (Standard Type)		
	C : Terminal Box for P Type		
⑨Option	Blank : Standard Specification		
	X : Special Specification Code		
⑩Option Code (Note 2)	Lead Wires/Terminal Box Position Code Please refer to the list of option codes on page 581 for details.		

Note 1: Please refer to page 639 for the specifications of terminal boxes.
Note 2: The option code will not be shown in the nomenclature on the nameplate. But it will be shown in the Option code row of the nameplate.

Controllers

■ Type Code

Part Number: SC P – 10 1 L

- Part Number (L): Blank : U Type; L : P Type
- Function (1): 0: Only Variable Speed (Only U Type); 1: Variable Speed + Instant Stop; 2: Variable Speed + Instant Stop + Slow Start/Slow Down; 3: Variable Speed + Instant Stop + Slow Start/Slow Down + Parallel Operation
- Supply Voltage (10): Voltage 10: 1-Phase 100 V; 20: 1-Phase 200 V
- (P): U: U Type (sold in set with gearmotor); P: P Type (sold separately from gearmotor)
- (SC): SC: Generic name for Speed Controller

F3 Type Gearboxes (Double Shaft Type) MID Series <Concentric Right Angle Hollow Bore/F3S>

Mounting Type	Motor Type		Frame Size		Reduction Ratio		Motor Power Class	Option	Terminal Box	Option	Option Code
F3S		–	30	–	50	–	040				
F3S		–	45	–	240	–	075			X	
①	②		③		④		⑤	⑥	⑦	⑧	⑨

①Mounting Type (Note 1)	F3S : Concentric Right Angle Hollow Bore
②Motor Type	Blank : Without Motor (Double Shaft Type)
③Frame Size and Output Shaft Diameter	Output Shaft Diameter (Internal Diameter)
④Reduction Ratio	5: 1/5 240: 1/240
⑤Motor Power Class	010 : 0.1 kW Class
	020 : 0.2 kW Class
	040 : 0.4 kW Class
	075 : 0.75 kW Class
	150 : 1.5 kW Class
	220 : 2.2 kW Class
⑥ ⑦Options	Blank : Standard Specification There is no applicable option.
⑧Option	Blank : Standard Specification
	X : Special Specification Code
⑨Option Code (Note 2)	Blank : Standard Specification

Note 1: Right angle shaft types are not available.
Note 2: The option code will not be shown in the nomenclature on the nameplate. But it will be shown in the Option code row of the nameplate.

F3 Type S-Type Gearboxes MID Series <Concentric Right Angle Hollow Bore/F3S>

Mounting Type	Motor Type		Frame Size		Reduction Ratio		Motor Power Class	Option	Terminal Box	Option
F3S	S	–	30	–	50	–	040			
F3S	S	–	45	–	240	–	075			X
①	②		③		④		⑤	⑥	⑦	⑧

①Mounting Type (Note 1)	F3S : Right Angle Hollow Bore
②Motor Type	S : Gearbox designed for Designated Motor (S-Type)
③Frame Size and Output Shaft Diameter	Output Shaft Diameter (Hollow Bore Size)
④Reduction Ratio	5: 1/5 240: 1/240
⑤Motor Power Class	010 : 0.1 kW Class
	020 : 0.2 kW Class
	040 : 0.4 kW Class
	075 : 0.75 kW Class
	150 : 1.5 kW Class
	220 : 2.2 kW Class
⑥ ⑦Options	Blank : Standard Specification
⑧Option	Blank : Standard Specification
	X : Special Specification Code

Note 1: Right angle shaft types are not available.

Standard Model Lineup

Model and Type Codes
Standard Model Lineup

F2 Type Gearmotors/Gearmotors with Brake MINI Series <Concentric Right Angle Hollow Bore/ F2S>

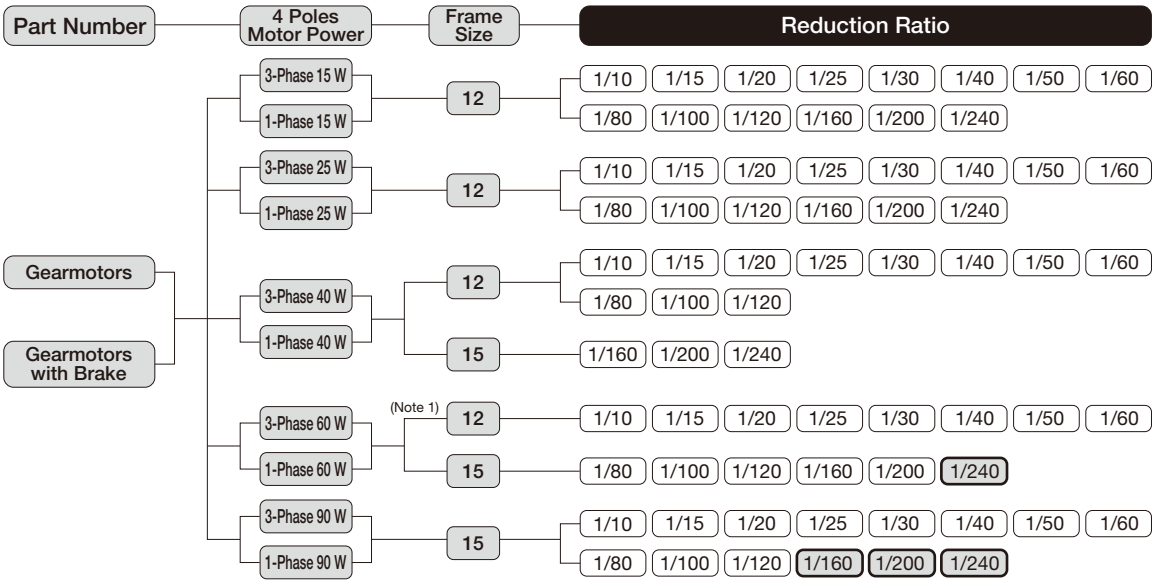

Note 1: The frame size for types other than Three-phase standard voltage types will be 15. The frame size for all Single-phase types is 15.
Note 2: ⬭ indicates a limited torque type. Please make sure to check the allowable output shaft torque in the performance table.

F3 Type Gearmotors/Gearmotors with Brake MID Series <Concentric Right Angle Hollow Bore/ F3S>

Part Number	4 Poles Motor Power	Frame Size	Reduction Ratio
Gearmotors / Gearmotors with Brake / Brakemotors with Manual Release	3-Phase 0.1 kW	20	1/5, 1/7.5, 1/10, 1/12.5, 1/15, 1/20, 1/25, 1/30, 1/40, 1/50, 1/60
		25	1/80, 1/100, 1/120, 1/160, 1/200, 1/240
	3-Phase 0.2 kW	(Note 1) 20	1/5, 1/7.5, 1/10, 1/12.5, 1/15, 1/20, 1/25, 1/30
		25	1/5, 1/7.5, 1/10, 1/12.5, 1/15, 1/20, 1/25, 1/30, 1/40, 1/50, 1/60
		30	1/80, 1/100, 1/120, 1/160, 1/200, 1/240
	3-Phase 0.4 kW	(Note 1) 25	1/5, 1/7.5, 1/10, 1/12.5, 1/15, 1/20, 1/25, 1/30
		30	1/5, 1/7.5, 1/10, 1/12.5, 1/15, 1/20, 1/25, 1/30, 1/40, 1/50, 1/60
		35	1/80, 1/100, 1/120, 1/160, 1/200, 1/240
	3-Phase 0.75 kW	(Note 1) 30	1/5, 1/7.5, 1/10, 1/12.5, 1/15, 1/20, 1/25, 1/30
		35	1/5, 1/7.5, 1/10, 1/12.5, 1/15, 1/20, 1/25, 1/30, 1/40, 1/50, 1/60
		45	1/80, 1/100, 1/120, 1/160, 1/200, 1/240
	3-Phase 1.5 kW	(Note 1) 35	1/5, 1/7.5, 1/10, 1/12.5, 1/15, 1/20, 1/25, 1/30
		45	1/5, 1/7.5, 1/10, 1/12.5, 1/15, 1/20, 1/25, 1/30, 1/40, 1/50, 1/60
	3-Phase 2.2 kW	45	1/5, 1/7.5, 1/10, 1/12.5, 1/15, 1/20, 1/25, 1/30

Note 1: Small frame size type.
Note 2: ▭ indicates a limited torque type. Please make sure to check the allowable output shaft torque in the performance table.

F3 Type Gearmotors/Gearmotors with Brake MID Series <Concentric Right Angle Hollow Bore/ F3S>

Part Number	4 Poles Motor Power	Frame Size	Reduction Ratio
Gearmotors / Gearmotors with Brake	1-Phase 0.1 kW	20	1/5, 1/7.5, 1/10, 1/12.5, 1/15, 1/20, 1/25, 1/30, 1/40, 1/50, 1/60
		25	1/80, 1/100, 1/120, 1/160, 1/200, 1/240
	1-Phase 0.2 kW	25	1/5, 1/7.5, 1/10, 1/12.5, 1/15, 1/20, 1/25, 1/30, 1/40, 1/50, 1/60
		30	1/80, 1/100, 1/120, 1/160, 1/200, 1/240
	1-Phase 0.4 kW	30	1/5, 1/7.5, 1/10, 1/12.5, 1/15, 1/20, 1/25, 1/30, 1/40, 1/50, 1/60
		35	1/80, 1/100, 1/120, 1/160, 1/200, 1/240

Note 1: ▭ indicates a limited torque type. Please make sure to check the allowable output shaft torque in the performance table.

F2 Type Gearmotors/Gearmotors with Brake MINI Series <Concentric Right Angle Shaft/ F2F>

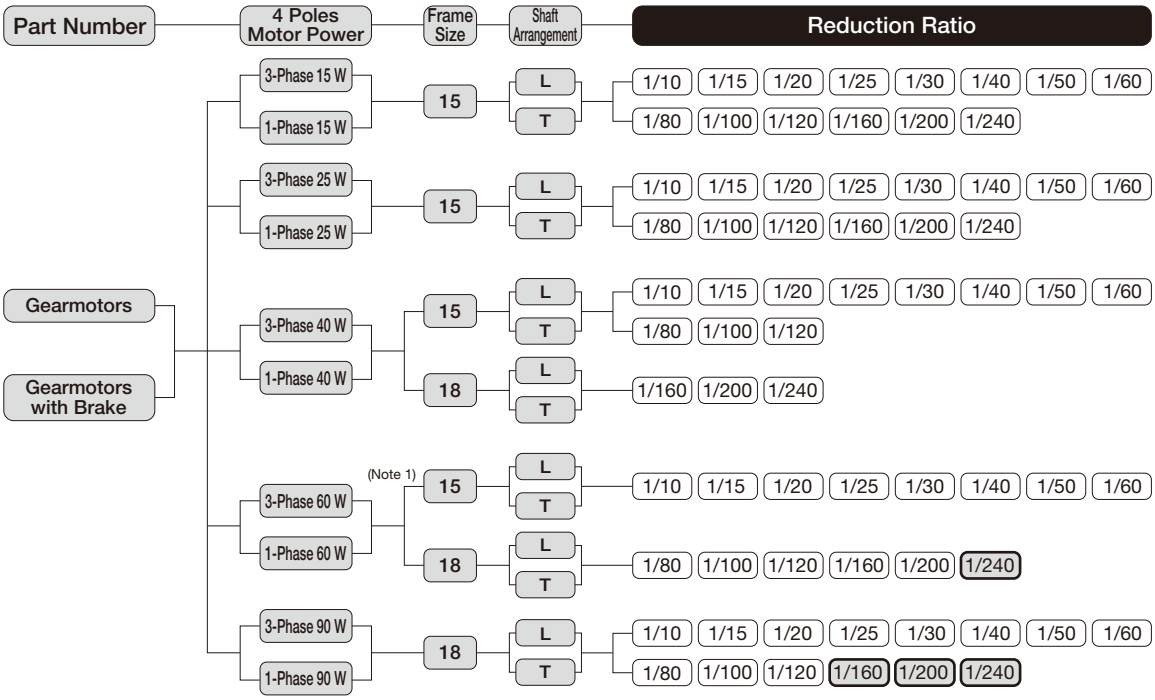

Note 1: The frame size for types other than Three-phase standard voltage types is 18. The frame size for all Single-phase types is 18.
Note 2: ⬭ indicates a limited torque type. Please make sure to check the allowable output shaft torque in the performance table.

F3 Type Gearmotors/Gearmotors with Brake MID Series <Concentric Right Angle Shaft/ F3F>

Part Number	4 Poles Motor Power		Frame Size	Shaft Arrangement	Reduction Ratio
Gearmotors / Gearmotors with Brake / Brakemotors with Manual Release	3-Phase 0.1 kW		18	L, R, T	1/5, 1/7.5, 1/10, 1/12.5, 1/15, 1/20, 1/25, 1/30, 1/40, 1/50, 1/60
			22	L, R, T	1/80, 1/100, 1/120, 1/160, 1/200, 1/240
	3-Phase 0.2 kW	(Note 1)	18	L, R, T	1/5, 1/7.5, 1/10, 1/12.5, 1/15, 1/20, 1/25, 1/30
			22	L, R, T	1/5, 1/7.5, 1/10, 1/12.5, 1/15, 1/20, 1/25, 1/30, 1/40, 1/50, 1/60
			28	L, R, T	1/80, 1/100, 1/120, 1/160, 1/200, 1/240
	3-Phase 0.4 kW	(Note 1)	22	L, R, T	1/5, 1/7.5, 1/10, 1/12.5, 1/15, 1/20, 1/25, 1/30
			28	L, R, T	1/5, 1/7.5, 1/10, 1/12.5, 1/15, 1/20, 1/25, 1/30, 1/40, 1/50, 1/60
			32	L, R, T	1/80, 1/100, 1/120, 1/160, 1/200, 1/240
	3-Phase 0.75 kW	(Note 1)	28	L, R, T	1/5, 1/7.5, 1/10, 1/12.5, 1/15, 1/20, 1/25, 1/30
			32	L, R, T	1/5, 1/7.5, 1/10, 1/12.5, 1/15, 1/20, 1/25, 1/30, 1/40, 1/50, 1/60
			40	L, R, T	1/80, 1/100, 1/120, 1/160, 1/200, 1/240
	3-Phase 1.5 kW	(Note 1)	32	L, R, T	1/5, 1/7.5, 1/10, 1/12.5, 1/15, 1/20, 1/25, 1/30
			40	L, R, T	1/5, 1/7.5, 1/10, 1/12.5, 1/15, 1/20, 1/25, 1/30, 1/40, 1/50, 1/60
	3-Phase 2.2 kW		40	L, R, T	1/5, 1/7.5, 1/10, 1/12.5, 1/15, 1/20, 1/25, 1/30

Note 1: Small frame size type.
Note 2: ▭ indicates a limited torque type. Please make sure to check the allowable output shaft torque in the performance table.

F2 Type IP65 Gearmotors/IP65 Gearmotors with Brake MINI Series <Concentric Right Angle Hollow Bore/ F2S>

Part Number	4 Poles Motor Power	Frame Size	Reduction Ratio
IP65 Gearmotors / IP65 Gearmotors with Brake	3-Phase 15 W / 1-Phase 15 W	12	1/10, 1/15, 1/20, 1/25, 1/30, 1/40, 1/50, 1/60, 1/80, 1/100, 1/120, 1/160, 1/200, 1/240
	3-Phase 25 W / 1-Phase 25 W	12	1/10, 1/15, 1/20, 1/25, 1/30, 1/40, 1/50, 1/60, 1/80, 1/100, 1/120, 1/160, 1/200, 1/240
	3-Phase 40 W	12	1/10, 1/15, 1/20, 1/25, 1/30, 1/40, 1/50, 1/60, 1/80, 1/100, 1/120
		15	1/160, 1/200, 1/240
	1-Phase 40 W	15	1/10, 1/15, 1/20, 1/25, 1/30, 1/40, 1/50, 1/60, 1/80, 1/100, 1/120, 1/160, 1/200, 1/240
	3-Phase 60 W	15	1/10, 1/15, 1/20, 1/25, 1/30, 1/40, 1/50, 1/60, 1/80, 1/100, 1/120, 1/160, 1/200, 1/240
	3-Phase 90 W	15	1/10, 1/15, 1/20, 1/25, 1/30, 1/40, 1/50, 1/60, 1/80, 1/100, 1/120, 1/160, 1/200, 1/240

Note 1: Single-phase types are not available for 60 W and 90 W.
Note 2: ⬭ indicates a limited torque type. Please make sure to check the allowable output shaft torque in the performance table.

F3 Type IP65 Gearmotors/IP65 Gearmotors with Brake MID Series <Concentric Right Angle Hollow Bore/ F3S>

Part Number	4 Poles Motor Power	Frame Size	Reduction Ratio
IP65 Gearmotors / IP65 Gearmotors with Brake	3-Phase 0.1 kW	20	1/5, 1/7.5, 1/10, 1/12.5, 1/15, 1/20, 1/25, 1/30, 1/40, 1/50, 1/60
		25	1/80, 1/100, 1/120, 1/160, 1/200, 1/240
	3-Phase 0.2 kW	(Note 1) 20	1/5, 1/7.5, 1/10, 1/12.5, 1/15, 1/20, 1/25, 1/30
		25	1/5, 1/7.5, 1/10, 1/12.5, 1/15, 1/20, 1/25, 1/30, 1/40, 1/50, 1/60
		30	1/80, 1/100, 1/120, 1/160, 1/200, 1/240
	3-Phase 0.4 kW	(Note 1) 25	1/5, 1/7.5, 1/10, 1/12.5, 1/15, 1/20, 1/25, 1/30
		30	1/5, 1/7.5, 1/10, 1/12.5, 1/15, 1/20, 1/25, 1/30, 1/40, 1/50, 1/60
		35	1/80, 1/100, 1/120, 1/160, 1/200, 1/240
	3-Phase 0.75 kW	(Note 1) 30	1/5, 1/7.5, 1/10, 1/12.5, 1/15, 1/20, 1/25, 1/30
		35	1/5, 1/7.5, 1/10, 1/12.5, 1/15, 1/20, 1/25, 1/30, 1/40, 1/50, 1/60
		45	1/80, 1/100, 1/120, 1/160, 1/200, 1/240
	(Note 2) 3-Phase 1.5 kW	(Note 1) 35	1/5, 1/7.5, 1/10, 1/12.5, 1/15, 1/20, 1/25, 1/30
		45	1/5, 1/7.5, 1/10, 1/12.5, 1/15, 1/20, 1/25, 1/30, 1/40, 1/50, 1/60
	(Note 2) 3-Phase 2.2 kW	45	1/5, 1/7.5, 1/10, 1/12.5, 1/15, 1/20, 1/25, 1/30

Note 1: Small frame size type.
Note 2: IP65 gearmotors with a brake are not available with motor powers of 1.5 kW and 2.2 kW.
Note 3: ▭ indicates a limited torque type. Please make sure to check the allowable output shaft torque in the performance table.

F2 Type Speed Control Gearmotors MINI Series <Concentric Right Angle Hollow Bore/F2S>

Part Number	4 Poles Motor Power	Frame Size	Reduction Ratio
Speed Control Gearmotors	1-Phase 15 W	12	1/10, 1/15, 1/20, 1/25, 1/30, 1/40, 1/50, 1/60, 1/80, 1/100, 1/120, 1/160, 1/200, 1/240
	1-Phase 25 W	12	1/10, 1/15, 1/20, 1/25, 1/30, 1/40, 1/50, 1/60, 1/80, 1/100, 1/120, 1/160, 1/200, 1/240
	1-Phase 40 W	15	1/10, 1/15, 1/20, 1/25, 1/30, 1/40, 1/50, 1/60, 1/80, 1/100, 1/120, 1/160, 1/200, 1/240
	1-Phase 60 W	15	1/10, 1/15, 1/20, 1/25, 1/30, 1/40, 1/50, 1/60, 1/80, 1/100, 1/120, 1/160, 1/200, **1/240**
	1-Phase 90 W	15	1/10, 1/15, 1/20, 1/25, 1/30, 1/40, 1/50, 1/60, 1/80, 1/100, 1/120, **1/160**, **1/200**, **1/240**

Note 1: ▭ indicates a limited torque type. Please make sure to check the allowable output shaft torque in the performance table.

F2 Type Speed Control Gearmotors MINI Series <Concentric Right Angle Shaft/F2F>

Part Number	4 Poles Motor Power	Frame Size	Shaft Arrangement	Reduction Ratio
Speed Control Gearmotors	1-Phase 15 W	15	L, T	1/10, 1/15, 1/20, 1/25, 1/30, 1/40, 1/50, 1/60, 1/80, 1/100, 1/120, 1/160, 1/200, 1/240
	1-Phase 25 W	15	L, T	1/10, 1/15, 1/20, 1/25, 1/30, 1/40, 1/50, 1/60, 1/80, 1/100, 1/120, 1/160, 1/200, 1/240
	1-Phase 40 W	18	L, T	1/10, 1/15, 1/20, 1/25, 1/30, 1/40, 1/50, 1/60, 1/80, 1/100, 1/120, 1/160, 1/200, 1/240
	1-Phase 60 W	18	L, T	1/10, 1/15, 1/20, 1/25, 1/30, 1/40, 1/50, 1/60, 1/80, 1/100, 1/120, 1/160, 1/200, **1/240**
	1-Phase 90 W	18	L, T	1/10, 1/15, 1/20, 1/25, 1/30, 1/40, 1/50, 1/60, 1/80, 1/100, 1/120, **1/160**, **1/200**, **1/240**

Note 1: ▭ indicates a limited torque type. Please make sure to check the allowable output shaft torque in the performance table.

F3 Type Gearboxes (Double Shaft Type) MID Series <Concentric Right Angle Hollow Bore/F3S>

Part Number	Motor Power Class	Frame Size	Reduction Ratio
Gearboxes (Double Shaft Type)	0.1 kW	20	1/5, 1/7.5, 1/10, 1/12.5, 1/15, 1/20, 1/25, 1/30, 1/40, 1/50, 1/60
		25	1/80, 1/100, 1/120, 1/160, 1/200, 1/240
	0.2 kW	25	1/5, 1/7.5, 1/10, 1/12.5, 1/15, 1/20, 1/25, 1/30, 1/40, 1/50, 1/60
		30	1/80, 1/100, 1/120, 1/160, 1/200, 1/240
	0.4 kW	30	1/5, 1/7.5, 1/10, 1/12.5, 1/15, 1/20, 1/25, 1/30, 1/40, 1/50, 1/60
		35	1/80, 1/100, 1/120, 1/160, 1/200, 1/240
	0.75 kW	35	1/5, 1/7.5, 1/10, 1/12.5, 1/15, 1/20, 1/25, 1/30, 1/40, 1/50, 1/60
		45	1/80, 1/100, 1/120, 1/160, 1/200, 1/240
	1.5 kW	45	1/5, 1/7.5, 1/10, 1/12.5, 1/15, 1/20, 1/25, 1/30, 1/40, 1/50, 1/60
	2.2 kW	45	1/5, 1/7.5, 1/10, 1/12.5, 1/15, 1/20, 1/25, 1/30

Note 1: ▭ indicates a limited torque type. Please make sure to check the allowable output shaft torque in the performance table.

F3 Type S-Type Gearboxes MID Series <Concentric Right Angle Hollow Bore/F3S>

Part Number	Motor Power Class	Frame Size	Reduction Ratio
S-Type Gearboxes	0.1 kW	20	1/5, 1/7.5, 1/10, 1/12.5, 1/15, 1/20, 1/25, 1/30, 1/40, 1/50, 1/60
		25	1/80, 1/100, 1/120, 1/160, 1/200, **1/240**
	0.2 kW	25	1/5, 1/7.5, 1/10, 1/12.5, 1/15, 1/20, 1/25, 1/30, 1/40, 1/50, 1/60
		30	1/80, 1/100, 1/120, 1/160, **1/200**, **1/240**
	0.4 kW	30	1/5, 1/7.5, 1/10, 1/12.5, 1/15, 1/20, 1/25, 1/30, 1/40, 1/50, 1/60
		35	1/80, 1/100, 1/120, **1/160**, **1/200**, **1/240**
	0.75 kW	35	1/5, 1/7.5, 1/10, 1/12.5, 1/15, 1/20, 1/25, 1/30, 1/40, 1/50, 1/60
		45	1/80, 1/100, 1/120, **1/160**, **1/200**, **1/240**
	1.5 kW	45	1/5, 1/7.5, 1/10, 1/12.5, 1/15, 1/20, 1/25, 1/30, 1/40, 1/50, 1/60
	2.2 kW	45	1/5, 1/7.5, 1/10, 1/12.5, 1/15, 1/20, 1/25, 1/30

Note 1: ▭ indicates a limited torque type. Please make sure to check the allowable output shaft torque in the performance table.

MEMO

1. Gearmotors Gearmotors with Brake

1-1. Motor Characteristics Table

F2 Type 3-Phase Standard Voltage <Concentric Right Angle Hollow Bore/F2S>

Series	Power (W)	Voltage (V)	Frequency (Hz)	Frame Size	Rated Current (A)	Rated Speed (r/min)	Startup Current (A)
MINI	15	200/200/220	50/60/60	12	0.14/0.13/0.13	1350/1550/1600	0.30/0.28/0.31
	25	200/200/220	50/60/60	12	0.21/0.19/0.19	1350/1550/1600	0.44/0.42/0.46
	40	200/200/220	50/60/60	12	0.29/0.27/0.27	1350/1550/1600	0.67/0.62/0.68
				15	0.27/0.26/0.26	1350/1550/1550	0.73/0.69/0.76
	60	200/200/220	50/60/60	12	0.42/0.39/0.39	1350/1550/1550	0.94/0.86/1.00
				15	0.40/0.36/0.36	1350/1550/1600	1.04/0.97/1.07
	90	200/200/220	50/60/60	15	0.51/0.48/0.48	1350/1550/1550	1.42/1.36/1.49

F2 Type 3-Phase High Voltage (400 V Class) <Concentric Right Angle Hollow Bore/F2S>

Series	Power (W)	Voltage (V)	Frequency (Hz)	Frame Size	Rated Current (A)	Rated Speed (r/min)	Startup Current (A)
MINI	15	380/400/400/440	50/50/60/60	12	0.11/0.12/0.10/0.11	1400/1400/1700/1700	0.26/0.28/0.26/0.29
	25	380/400/400/440	50/50/60/60	12	0.11/0.12/0.11/0.12	1350/1400/1600/1650	0.26/0.28/0.26/0.29
	40	380/400/400/440	50/50/60/60	12	0.14/0.14/0.14/0.14	1300/1350/1550/1600	0.30/0.32/0.30/0.33
				15	0.13/0.14/0.13/0.14	1300/1350/1550/1600	0.33/0.35/0.33/0.37
	60	380/400/400/440	50/50/60/60	15	0.17/0.17/0.17/0.17	1300/1350/1550/1600	0.43/0.45/0.43/0.47
	90	380/400/400/440	50/50/60/60	15	0.26/0.26/0.26/0.26	1300/1350/1550/1600	0.70/0.74/0.69/0.77

F2 Type 1-Phase Standard Voltage <Concentric Right Angle Hollow Bore/F2S>

Series	Power (W)	Voltage (V)	Frequency (Hz)	Frame Size	Rated Current (A)	Rated Speed (r/min)	Startup Current (A)	Capacitor (μF)
MINI	15	100/100	50/60	12	0.39/0.35	1350/1650	0.72/0.67	5
	25	100/100	50/60	12	0.48/0.48	1350/1600	0.86/0.80	7
	40	100/100	50/60	12	0.67/0.80	1400/1650	1.26/1.23	12
				15	0.61/0.66	1350/1650	1.43/1.36	10
	60	100/100	50/60	15	0.90/1.00	1350/1600	2.11/1.98	15
	90	100/100	50/60	15	1.30/1.40	1350/1600	2.89/2.68	20

F2 Type 1-Phase High Voltage (200 V Class) <Concentric Right Angle Hollow Bore/F2S>

Series	Power (W)	Voltage (V)	Frequency (Hz)	Frame Size	Rated Current (A)	Rated Speed (r/min)	Startup Current (A)	Capacitor (μF)
MINI	15	200/200	50/60	12	0.21/0.19	1350/1650	0.35/0.33	1.2
	25	200/200	50/60	12	0.26/0.25	1350/1600	0.47/0.44	1.7
	40	200/200	50/60	12	0.34/0.33	1350/1600	0.66/0.60	2.5
				15	0.29/0.34	1350/1600	0.64/0.61	2.5
	60	200/200	50/60	15	0.45/0.48	1350/1600	1.06/1.00	3.5
	90	200/200	50/60	15	0.65/0.66	1350/1600	1.44/1.35	5

The rated current in the motor characteristics table is the current data for the motor operating without a gearbox.
With regard to gearmotors with a brake, it is necessary to consider the current value flowing through the brake as needed.
For more details, please contact your nearest Sales Office or the CS Center.

F3 Type 3-Phase Standard Voltage/High Voltage (400 V Class)/Special Voltage <Concentric Right Angle Hollow Bore/F3S>

Series	Power	Power Supply/ Certification Codes	Voltage (V)	Frequency (Hz)	Rated Current (A)	Startup Current (A)	Rated Speed (r/min)
MID	0.1kW	NN	200/200/220	50/60/60	0.61/0.54/0.54	2.39/2.27/2.52	1410/1690/1710
		WN	380/400/400/440	50/50/60/60	0.31/0.31/0.28/0.28	1.12/1.18/1.12/1.22	1400/1410/1690/1720
		KN	220/380	60/60	0.52/0.30	1.90/1.10	1680/1680
		CN	220/230/380	50/50/50	0.55/0.54/0.31	1.94/2.03/1.12	1400/1410/1400
		DN	220/220/380/380	50/60/50/60	0.55/0.52/0.31/0.30	1.94/1.90/1.12/1.10	1400/1680/1400/1680
		EN	415/440/480	50/50/60	0.30/0.29/0.26	1.06/1.12/1.17	1390/1420/1720
		AN	208/230/460/400	60/60/60/50	0.54/0.57/0.29/0.31	2.35/2.62/1.26/1.21	1690/1730/1730/1410
		MA	575	60	0.20	0.87	1700
	0.2 kW IE2	NN	200/200/220	50/60/60	1.1/1.0/1.0	4.70/4.35/4.85	1400/1680/1700
		WN	380/400/400/440	50/50/60/60	0.56/0.56/0.50/0.50	2.29/2.38/2.29/2.48	1390/1400/1680/1710
		KN	220/380	60/60	0.93/0.52	3.70/2.20	1680/1680
		CN	220/230/380	50/50/50	0.99/0.98/0.56	3.97/4.15/2.29	1400/1410/1390
		DN	220/220/380/380	50/60/50/60	0.99/0.93/0.56/0.52	3.97/3.70/2.29/2.20	1400/1680/1390/1680
		EN	415/440/480	50/50/60	0.50/0.50/0.45	1.75/1.86/2.00	1370/1400/1700
		AN	208/230/460/400	60/60/60/50	1.0/1.0/0.50/0.56	4.78/5.16/2.56/2.44	1680/1720/1720/1400
		MA	575	60	0.40	1.78	1710
	0.4 kW IE2	NN	200/200/220	50/60/60	2.1/1.8/1.8	9.50/8.60/9.60	1400/1680/1700
		WN	380/400/400/440	50/50/60/60	1.0/1.0/0.9/0.9	4.35/4.65/4.30/4.75	1390/1400/1680/1710
		KN	220/380	60/60	1.7/1.0	7.10/4.09	1670/1670
		CN	220/230/380	50/50/50	1.8/1.8/1.0	7.63/7.88/4.43	1390/1400/1390
		DN	220/220/380/380	50/60/50/60	1.8/1.7/1.0/1.0	7.63/7.10/4.43/4.09	1390/1670/1390/1670
		EN	415/440/480	50/50/60	0.96/0.95/0.82	3.96/4.20/4.20	1390/1410/1680
		AN	208/230/460/400	60/60/60/50	1.8/1.8/0.9/1.0	8.90/9.76/4.73/4.78	1680/1720/1720/1400
		MA	575	60	0.68	3.51	1700
	0.75 kW IE3	NN	200/200/220	50/60/60	3.5/3.2/3.1	21.8/19.0/21.1	1450/1740/1750
		WN	380/400/400/440	50/50/60/60	1.73/1.72/1.58/1.54	10.2/10.8/9.8/10.7	1440/1450/1740/1750
		KN	220/380	60/60	2.9/1.7	16.9/9.8	1740/1740
		CN	220/230/380	50/50/50	3.0/3.0/1.7	17.8/18.7/10.3	1450/1450/1440
		DN	220/220/380/380	50/60/50/60	3.1/2.9/1.8/1.7	19.3/16.9/11.2/9.8	1450/1740/1450/1740
		EN	415/440/480	50/50/60	1.54/1.52/1.36	8.6/9.3/9.0	1440/1450/1750
		UN	230/460/400	60/60/50	3.1/1.5/1.7	22.3/11.2/10.8	1760/1760/1450
		MA	575	60	1.16	7.2	1750
	1.5 kW IE3	NN	200/200/220	50/60/60	6.7/6.1/5.9	45.6/40.3/45.1	1450/1740/1760
		WN	380/400/400/440	50/50/60/60	3.4/3.4/3.1/3.0	21.9/23.2/20.4/22.8	1450/1450/1750/1760
		KN	220/380	60/60	5.9/3.4	45.1/25.8	1760/1760
		CN	220/230/380	50/50/50	5.9/5.9/3.4	38.5/40.4/22.1	1450/1450/1450
		EN	415/440/480	50/50/60	3.1/3.1/2.8	20.8/22.2/21.2	1450/1460/1760
		UN	230/460/400	60/60/50	5.9/2.9/3.3	44.9/22.6/23.2	1760/1760/1450
		MA	575	60	2.2	17.0	1760
	2.2 kW IE3	NN	200/200/220	50/60/60	9.3/8.6/8.2	70.3/56.9/63.7	1470/1760/1770
		WN	380/400/400/440	50/50/60/60	4.5/4.4/4.2/3.9	30.0/32.0/25.0/28.0	1440/1450/1740/1750
		KN	220/380	60/60	8.3/4.8	65.0/38.0	1770/1770
		CN	220/230/380	50/50/50	7.9/7.7/4.5	52.0/54.3/30.0	1460/1470/1440
		EN	415/440/480	50/50/60	4.3/4.3/3.8	33.1/35.5/29.8	1460/1470/1770
		UN	230/460/400	60/60/50	7.9/4.0/4.5	65.2/34.8/36.3	1770/1770/1470
		MA	575	60	3.3	24.4	1760

The rated current in the motor characteristics table is the current data for the motor operating without a gearbox.
With regard to gearmotors with a brake, it is necessary to consider the current value flowing through the brake as needed.
For more details, please contact your nearest Sales Office or the CS Center.

F3 Type 1-Phase Standard Voltage <Concentric Right Angle Hollow Bore/F3S>

Series	Power	Startup Method	Voltage (V)	Frequency (Hz)	Rated Current (A)	Startup Current (A)	Rated Speed (r/min)	Startup Torque (%)	Breakdown Torque (%)
MID	0.1 kW	Capacitor Run	100/100	50/60	1.7/1.9	4.40/4.07	1400/1700	60/70	165/172
	0.2 kW	Capacitor Start	100/100	50/60	5.1/4.5	20.0/20.0	1420/1700	276/294	194/187
	0.4 kW	Capacitor Start	100/100	50/60	8.7/7.9	32.0/32.0	1440/1730	210/205	189/178

The rated current in the motor characteristics table is the current data for the motor operating without a gearbox.
With regard to gearmotors with a brake, it is necessary to consider the current value flowing through the brake as needed.
For more details, please contact your nearest Sales Office or the CS Center.

F3 Type 1-Phase High Voltage (200 V Class) <Concentric Right Angle Hollow Bore/F3S>

Series	Power	Startup Method	Voltage (V)	Frequency (Hz)	Rated Current (A)	Startup Current (A)	Rated Speed (r/min)	Startup Torque (%)	Breakdown Torque (%)
MID	0.1 kW	Capacitor Run	200/200	50/60	0.82/0.96	2.10/2.00	1410/1700	65/81	163/178
	0.2 kW	Capacitor Start	200/200	50/60	2.5/2.2	10.0/10.0	1420/1700	254/250	203/205
	0.4 kW	Capacitor Start	200/200	50/60	4.3/3.9	19.0/18.0	1440/1730	181/190	240/217

The rated current in the motor characteristics table is the current data for the motor operating without a gearbox.
With regard to gearmotors with a brake, it is necessary to consider the current value flowing through the brake as needed.
For more details, please contact your nearest Sales Office or the CS Center.

1-1. Motor Characteristics Table

F2 Type 3-Phase Standard Voltage <Concentric Right Angle Shaft/F2F>

Series	Power (W)	Voltage (V)	Frequency (Hz)	Frame Size	Rated Current (A)	Rated Speed (r/min)	Startup Current (A)
MINI	15	200/200/220	50/60/60	15	0.14/0.13/0.13	1350/1550/1600	0.30/0.28/0.31
	25	200/200/220	50/60/60	15	0.21/0.19/0.19	1350/1550/1600	0.44/0.42/0.46
	40	200/200/220	50/60/60	15	0.29/0.27/0.27	1350/1550/1600	0.67/0.62/0.68
				18	0.27/0.26/0.26	1350/1550/1550	0.73/0.69/0.76
	60	200/200/220	50/60/60	15	0.42/0.39/0.39	1350/1550/1550	0.94/0.86/1.00
				18	0.40/0.36/0.36	1350/1550/1600	1.04/0.97/1.07
	90	200/200/220	50/60/60	18	0.51/0.48/0.48	1350/1550/1550	1.42/1.36/1.49

F2 Type 3-Phase High Voltage (400 V Class) <Concentric Right Angle Shaft/F2F>

Series	Power (W)	Voltage (V)	Frequency (Hz)	Frame Size	Rated Current (A)	Rated Speed (r/min)	Startup Current (A)
MINI	15	380/400/400/440	50/50/60/60	15	0.11/0.12/0.10/0.11	1400/1400/1700/1700	0.26/0.28/0.26/0.29
	25	380/400/400/440	50/50/60/60	15	0.11/0.12/0.11/0.12	1350/1400/1600/1650	0.26/0.28/0.26/0.29
	40	380/400/400/440	50/50/60/60	15	0.14/0.14/0.14/0.14	1300/1350/1550/1600	0.30/0.32/0.30/0.33
				18	0.13/0.14/0.13/0.14	1300/1350/1550/1600	0.33/0.35/0.33/0.37
	60	380/400/400/440	50/50/60/60	18	0.17/0.17/0.17/0.17	1300/1350/1550/1600	0.43/0.45/0.43/0.47
	90	380/400/400/440	50/50/60/60	18	0.26/0.26/0.26/0.26	1300/1350/1550/1600	0.70/0.74/0.69/0.77

F2 Type 1-Phase Standard Voltage <Concentric Right Angle Shaft/F2F>

Series	Power (W)	Voltage (V)	Frequency (Hz)	Frame Size	Rated Current (A)	Rated Speed (r/min)	Startup Current (A)	Capacitor (μF)
MINI	15	100/100	50/60	15	0.39/0.35	1350/1650	0.72/0.67	5
	25	100/100	50/60	15	0.48/0.48	1350/1600	0.86/0.80	7
	40	100/100	50/60	15	0.67/0.80	1400/1650	1.26/1.23	12
				18	0.61/0.66	1350/1650	1.43/1.36	10
	60	100/100	50/60	18	0.90/1.00	1350/1600	2.11/1.98	15
	90	100/100	50/60	18	1.30/1.40	1350/1600	2.89/2.68	20

F2 Type 1-Phase High Voltage (200 V Class) <Concentric Right Angle Shaft/F2F>

Series	Power (W)	Voltage (V)	Frequency (Hz)	Frame Size	Rated Current (A)	Rated Speed (r/min)	Startup Current (A)	Capacitor (μF)
MINI	15	200/200	50/60	15	0.21/0.19	1350/1650	0.35/0.33	1.2
	25	200/200	50/60	15	0.26/0.25	1350/1600	0.47/0.44	1.7
	40	200/200	50/60	15	0.34/0.33	1350/1600	0.66/0.60	2.5
				18	0.29/0.34	1350/1600	0.64/0.61	2.5
	60	200/200	50/60	18	0.45/0.48	1350/1600	1.06/1.00	3.5
	90	200/200	50/60	18	0.65/0.66	1350/1600	1.44/1.35	5

The rated current in the motor characteristics table is the current data for the motor operating without a gearbox.
With regard to gearmotors with a brake, it is necessary to consider the current value flowing through the brake as needed.
For more details, please contact your nearest Sales Office or the CS Center.

F3 Type 3-Phase Standard Voltage/High Voltage (400 V Class)/Special Voltage <Concentric Right Angle Shaft/F3F>

Series	Power	Power Supply/ Certification Codes	Voltage (V)	Frequency (Hz)	Rated Current (A)	Startup Current (A)	Rated Speed (r/min)
MID	0.1kW	NN	200/200/220	50/60/60	0.61/0.54/0.54	2.39/2.27/2.52	1410/1690/1710
		WN	380/400/400/440	50/50/60/60	0.31/0.31/0.28/0.28	1.12/1.18/1.12/1.22	1400/1410/1690/1720
		KN	220/380	60/60	0.52/0.30	1.90/1.10	1680/1680
		CN	220/230/380	50/50/50	0.55/0.54/0.31	1.94/2.03/1.12	1400/1410/1400
		DN	220/220/380/380	50/60/50/60	0.55/0.52/0.31/0.30	1.94/1.90/1.12/1.10	1400/1680/1400/1680
		EN	415/440/480	50/50/60	0.30/0.29/0.26	1.06/1.12/1.17	1390/1420/1720
		AN	208/230/460/400	60/60/60/50	0.54/0.57/0.29/0.31	2.35/2.62/1.26/1.21	1690/1730/1730/1410
		MA	575	60	0.20	0.87	1700
	0.2 kW IE2	NN	200/200/220	50/60/60	1.1/1.0/1.0	4.70/4.35/4.85	1400/1680/1700
		WN	380/400/400/440	50/50/60/60	0.56/0.56/0.50/0.50	2.29/2.38/2.29/2.48	1390/1400/1680/1710
		KN	220/380	60/60	0.93/0.52	3.70/2.20	1680/1680
		CN	220/230/380	50/50/50	0.99/0.98/0.56	3.97/4.15/2.29	1400/1410/1390
		DN	220/220/380/380	50/60/50/60	0.99/0.93/0.56/0.52	3.97/3.70/2.29/2.20	1400/1680/1390/1680
		EN	415/440/480	50/50/60	0.50/0.50/0.45	1.75/1.86/2.00	1370/1400/1700
		AN	208/230/460/400	60/60/60/50	1.0/1.0/0.50/0.56	4.78/5.16/2.56/2.44	1680/1720/1720/1400
		MA	575	60	0.40	1.78	1710
	0.4 kW IE2	NN	200/200/220	50/60/60	2.1/1.8/1.8	9.50/8.60/9.60	1400/1680/1700
		WN	380/400/400/440	50/50/60/60	1.0/1.0/0.9/0.9	4.35/4.65/4.30/4.75	1390/1400/1680/1710
		KN	220/380	60/60	1.7/1.0	7.10/4.09	1670/1670
		CN	220/230/380	50/50/50	1.8/1.8/1.0	7.63/7.88/4.43	1390/1400/1390
		DN	220/220/380/380	50/60/50/60	1.8/1.7/1.0/1.0	7.63/7.10/4.43/4.09	1390/1670/1390/1670
		EN	415/440/480	50/50/60	0.96/0.95/0.82	3.96/4.20/4.20	1390/1410/1680
		AN	208/230/460/400	60/60/60/50	1.8/1.8/0.9/1.0	8.90/9.76/4.73/4.78	1680/1720/1720/1400
		MA	575	60	0.68	3.51	1700
	0.75 kW IE3	NN	200/200/220	50/60/60	3.5/3.2/3.1	21.8/19.0/21.1	1450/1740/1750
		WN	380/400/400/440	50/50/60/60	1.73/1.72/1.58/1.54	10.2/10.8/9.8/10.7	1440/1450/1740/1750
		KN	220/380	60/60	2.9/1.7	16.9/9.8	1740/1740
		CN	220/230/380	50/50/50	3.0/3.0/1.7	17.8/18.7/10.3	1450/1450/1440
		DN	220/220/380/380	50/60/50/60	3.1/2.9/1.8/1.7	19.3/16.9/11.2/9.8	1450/1740/1450/1740
		EN	415/440/480	50/50/60	1.54/1.52/1.36	8.6/9.3/9.0	1440/1450/1750
		UN	230/460/400	60/60/50	3.1/1.5/1.7	22.3/11.2/10.8	1760/1760/1450
		MA	575	60	1.16	7.2	1750
	1.5 kW IE3	NN	200/200/220	50/60/60	6.7/6.1/5.9	45.6/40.3/45.1	1450/1740/1760
		WN	380/400/400/440	50/50/60/60	3.4/3.4/3.1/3.0	21.9/23.2/20.4/22.8	1450/1450/1750/1760
		KN	220/380	60/60	5.9/3.4	45.1/25.8	1760/1760
		CN	220/230/380	50/50/50	5.9/5.9/3.4	38.5/40.4/22.1	1450/1450/1450
		EN	415/440/480	50/50/60	3.1/3.1/2.8	20.8/22.2/21.2	1450/1460/1760
		UN	230/460/400	60/60/50	5.9/2.9/3.3	44.9/22.6/23.2	1760/1760/1450
		MA	575	60	2.2	17.0	1760
	2.2 kW IE3	NN	200/200/220	50/60/60	9.3/8.6/8.2	70.3/56.9/63.7	1470/1760/1770
		WN	380/400/400/440	50/50/60/60	4.5/4.4/4.2/3.9	30.0/32.0/25.0/28.0	1440/1450/1740/1750
		KN	220/380	60/60	8.3/4.8	65.0/38.0	1770/1770
		CN	220/230/380	50/50/50	7.9/7.7/4.5	52.0/54.3/30.0	1460/1470/1440
		EN	415/440/480	50/50/60	4.3/4.3/3.8	33.1/35.5/29.8	1460/1470/1770
		UN	230/460/400	60/60/50	7.9/4.0/4.5	65.2/34.8/36.3	1770/1770/1470
		MA	575	60	3.3	24.4	1760

The rated current in the motor characteristics table is the current data for the motor operating without a gearbox.
With regard to gearmotors with a brake, it is necessary to consider the current value flowing through the brake as needed.
For more details, please contact your nearest Sales Office or the CS Center.

1-2. Performance Table

F2 Type Gearmotors/Gearmotors with Brake <Concentric Right Angle Hollow Bore/F2S>

[Notes]
- The values in parentheses ( ) in the drawings are the indications for gearmotors with brake.
- The output shaft speed is the value determined with the motor's synch-speed and the reduction ratio.
- Allowable output shaft O.H.L. is the value at 10 mm from the end of the output shaft.
- The "*" mark indicates a limited torque type. Please make sure to check the allowable output shaft torque in the performance table.
- The key for the output shaft is not included.
- In the performance table, the reduction ratio in ▭ indicates that when the connection is made as shown on page 546 (CW), the direction of rotation is clockwise in the case of a three-Phase motor or counterclockwise in the case of a single-Phase motor when viewed from the side indicated by arrow Ⓐ shown in the figure on the right. (Refer to the figure on the right)

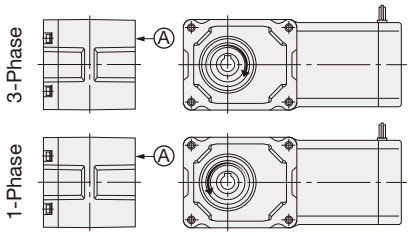

Series	Motor Power	Frame Size	Reduction Ratio	Actual Reduction Ratio	Output Shaft Speed r/min 50 Hz	Output Shaft Speed r/min 60 Hz	Allowable Output Shaft Torque N·m	Allowable Output Shaft O.H.L. N	Allowable Output Shaft Thrust Load N	Drawings
MINI	15 W	12	1/10	4/41	150	180	0.69	343	88	P.460
			1/15	8/123	100	120	0.98	441	108	
			1/20	2/41	75	90	1.27	539	137	
			1/25	8/205	60	72	1.67	588	147	
			1/30	4/123	50	60	1.96	686	177	
			1/40	1/41	37.5	45	2.65	784	196	
			1/50	4/205	30	36	3.33	882	226	
			1/60	20/1189	25	30	3.92	882	226	
			1/80	1/82	18.8	22.5	5.00	980	245	
			1/100	2/205	15	18	6.27	980	245	
			1/120	1/123	12.5	15	7.45	1080	275	
			1/160	1/164	9.4	11.2	9.80	1080	275	
			1/200	1/205	7.5	9	12.7	1080	275	
			1/240	5/1189	6.3	7.5	14.7	1080	275	
	25 W	12	1/10	4/41	150	180	1.08	343	88	P.460
			1/15	8/123	100	120	1.67	441	108	
			1/20	2/41	75	90	2.25	539	137	
			1/25	8/205	60	72	2.74	588	147	
			1/30	4/123	50	60	3.33	686	177	
			1/40	1/41	37.5	45	4.41	784	196	
			1/50	4/205	30	36	5.49	882	226	
			1/60	20/1189	25	30	6.66	882	226	
			1/80	1/82	18.8	22.5	8.43	980	245	
			1/100	2/205	15	18	10.8	980	245	
			1/120	1/123	12.5	15	12.7	1080	275	
			1/160	1/164	9.4	11.2	16.7	1080	275	
			1/200	1/205	7.5	9	20.6	1080	275	
			1/240	5/1189	6.3	7.5	25.5	1080	275	
	40 W	12	1/10	4/41	150	180	1.76	343	88	P.460
			1/15	8/123	100	120	2.65	441	108	
			1/20	2/41	75	90	3.53	539	137	
			1/25	8/205	60	72	4.41	588	147	
			1/30	4/123	50	60	5.29	686	177	
			1/40	1/41	37.5	45	7.06	784	196	
			1/50	4/205	30	36	8.82	882	226	
			1/60	20/1189	25	30	10.8	882	226	
			1/80	1/82	18.8	22.5	13.7	980	245	
			1/100	2/205	15	18	16.7	980	245	
			1/120	1/123	12.5	15	20.6	1080	275	
		15	1/160	1/164	9.4	11.2	26.5	1370	343	P.461
			1/200	1/205	7.5	9	33.3	1370	343	
			1/240	1/246	6.3	7.5	40.2	1370	343	

Series	Motor Power	Frame Size	Reduction Ratio	Actual Reduction Ratio	Output Shaft Speed r/min 50 Hz	Output Shaft Speed r/min 60 Hz	Allowable Output Shaft Torque N·m	Allowable Output Shaft O.H.L. N	Allowable Output Shaft Thrust Load N	Drawings
MINI	60 W	12 (Note 1)	1/10	4/41	150	180	2.74	343	88	P.460
			1/15	8/123	100	120	4.12	441	108	
			1/20	2/41	75	90	5.49	539	137	
			1/25	8/205	60	72	6.96	588	147	
			1/30	4/123	50	60	8.33	686	177	
			1/40	1/41	37.5	45	10.8	784	196	
			1/50	4/205	30	36	13.7	882	226	
			1/60	20/1189	25	30	16.7	882	226	
		15 (Note 1)	1/10	4/41	150	180	2.74	343	108	P.461
			1/15	8/123	100	120	4.12	441	147	
			1/20	2/41	75	90	5.49	539	186	
			1/25	8/205	60	72	6.96	588	226	
			1/30	4/123	50	60	8.33	686	245	
			1/40	1/41	37.5	45	10.8	784	275	
			1/50	4/205	30	36	13.7	882	294	
			1/60	2/123	25	30	16.7	882	294	
		15	1/80	1/82	18.8	22.5	20.6	1270	324	P.461
			1/100	2/205	15	18	26.5	1270	324	
			1/120	1/123	12.5	15	31.4	1370	343	
			1/160	1/164	9.4	11.2	42.1	1370	343	
			1/200	1/205	7.5	9	52.9	1370	343	
			* 1/240	1/246	6.3	7.5	53.9	1370	343	
	90 W	15	1/10	4/41	150	180	4.12	441	108	P.461
			1/15	8/123	100	120	6.17	588	147	
			1/20	2/41	75	90	8.33	735	186	
			1/25	8/205	60	72	10.8	882	226	
			1/30	4/123	50	60	12.7	980	245	
			1/40	1/41	37.5	45	16.7	1080	275	
			1/50	4/205	30	36	20.6	1180	294	
			1/60	2/123	25	30	24.5	1180	294	
			1/80	1/82	18.8	22.5	31.4	1270	324	
			1/100	2/205	15	18	39.2	1270	324	
			1/120	1/123	12.5	15	47.0	1370	343	
			* 1/160	1/164	9.4	11.2	53.9	1370	343	
			* 1/200	1/205	7.5	9	53.9	1370	343	
			* 1/240	1/246	6.3	7.5	53.9	1370	343	

• Please read the notes on page 449.

Note 1: Only Three-phase standard voltage (200 V Class) motors are available for 60 W motors with frame size 12. Please note that the frame size for Three-phase High Voltage (400 V class) and Single-phase motors is 15.

F3 Type Gearmotors/Gearmotors with Brake <Concentric Right Angle Hollow Bore/F3S>

[Notes]

- The values in parentheses ( ) in the drawings are the indications for gearmotors with brake.
- The output shaft speed is the value determined with the motor's synch-speed and the reduction ratio.
- The key for the output shaft is not included.
- In the performance table, ▭ indicates that the shaft rotates clockwise when viewed from the flange surface side on the right when the connection is made as shown on page 523 (CW). (Refer to the figure on the right)
- Allowable output shaft O.H.L. is the value at 20 mm from the end of the output shaft.
- The "*" mark indicates a limited torque type. Please make sure to check the allowable output shaft torque in the performance table.

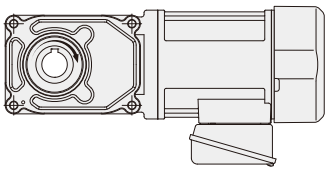

Series	Motor Power	Frame Size	Reduction Ratio	Actual Reduction Ratio	Output Shaft Speed r/min		Allowable Output Shaft Torque N·m		Allowable Output Shaft O.H.L.	Allowable Output Shaft Thrust Load	Drawings
					50 Hz	60 Hz	50 Hz	60 Hz	N	N	
MID	3-Phase 0.1 kW	20	1/5	1/5	300	360	2.5	2.2	980	244	P.464
			1/7.5	2/15	200	240	3.8	3.2	1080	270	
			1/10	1/10	150	180	5.2	4.3	1180	294	
			1/12.5	2/25	120	144	6.5	5.4	1270	316	
			1/15	1/15	100	120	7.7	6.5	1320	333	
			1/20	1/20	75	90	11	8.6	1470	373	
			1/25	1/25	60	72	13	11	1570	392	
			1/30	2/59	50	60	16	13	1670	422	
			1/40	1/40	37.5	45	21	18	1810	451	
			1/50	1/50	30	36	25	22	1860	471	
			1/60	1/59	25	30	31	25	1860	471	
		25	1/80	1/80	18.8	22.5	39	32	2550	637	P.466
			1/100	19/1880	15	18	49	41	2550	637	
			1/120	1/120	12.5	15	59	49	2550	637	
			1/160	1/160	9.4	11.3	78	66	2550	637	
			1/200	1/200	7.5	9	98	81	2550	637	
			* 1/240	1/240	6.3	7.5	101	98	2550	637	
	3-Phase 0.2 kW	20 (Small Frame Model)	1/5	1/5	300	360	5.5	4.6	980	244	P.464
			1/7.5	2/15	200	240	8.3	7	1080	270	
			1/10	1/10	150	180	11	9.2	1180	294	
			1/12.5	2/25	120	144	14	12	1270	316	
			1 /15	1/15	100	120	17	14	1320	333	
			1/20	1/20	75	90	23	19	1470	373	
			1/25	1/25	60	72	27	24	1570	392	
			1/30	2/59	50	60	33	27	1670	422	
		25	1/5	1/5	300	360	5.5	4.6	1230	307	P.466
			1/7.5	2/15	200	240	8.3	7	1370	342	
			1/10	1/10	150	180	11	9.2	1520	380	
			1/12.5	19/235	120	144	14	12	1620	405	
			1/15	1/15	100	120	17	14	1720	429	
			1/20	1/20	75	90	23	19	1860	466	
			1/25	1/25	60	72	27	24	2010	502	
			1/30	1/30	50	60	33	27	2110	527	
			1/40	1/40	37.5	45	44	37	2300	576	
			1/50	1/50	30	36	55	46	2450	613	
			1/60	1/60	25	30	67	55	2550	637	
		30	1/80	1/80	18.8	22.5	84	71	3090	775	P.470
			1/100	19/1880	15	18	105	87	3140	785	
			1/120	1/120	12.5	15	126	105	3140	785	
			1/160	1/160	9.4	11.3	169	140	3140	785	
			* 1/200	1/200	7.5	9	184	175	3140	785	
			* 1/240	1/240	6.3	7.5	184	184	3140	785	

Series	Motor Power	Frame Size	Reduction Ratio	Actual Reduction Ratio	Output Shaft Speed r/min 50 Hz	Output Shaft Speed r/min 60 Hz	Allowable Output Shaft Torque N·m 50 Hz	Allowable Output Shaft Torque N·m 60 Hz	Allowable Output Shaft O.H.L. N	Allowable Output Shaft Thrust Load N	Drawings
MID	3-Phase 0.4 kW	25 (Small Frame Model)	1/5	1/5	300	360	11	9.2	1230	307	P.466
			1/7.5	2/15	200	240	17	14	1370	342	
			1/10	1/10	150	180	23	19	1520	380	
			1/12.5	19/235	120	144	27	24	1620	405	
			1/15	1/15	100	120	33	27	1720	429	
			1/ 20	1/20	75	90	44	37	1860	466	
			1/25	1/25	60	72	55	46	2010	502	
			1/30	1/30	50	60	67	55	2110	527	
		30	1/5	1/5	300	360	11	9.2	1520	375	P.470
			1/7.5	2/15	200	240	17	14	1760	438	
			1/10	1/10	150	180	23	19	1910	475	
			1/12.5	19/235	120	144	27	24	2060	506	
			1/15	1/15	100	120	33	27	2160	539	
			1/20	1/20	75	90	44	37	2400	600	
			1/25	1/25	60	72	55	46	2550	637	
			1/30	1/30	50	60	67	55	2650	662	
			1/40	1/40	37.5	45	88	74	2840	711	
			1/50	1/50	30	36	111	92	2990	747	
			1/60	1/60	25	30	133	111	3090	767	
		35	1/80	1/80	18.8	22.5	169	140	3480	873	P.472
			1/100	19/1880	15	18	211	175	3530	883	
			1/120	1/120	12.5	15	253	211	3530	883	
			* 1/160	1/160	9.4	11.3	270	270	3630	912	
			* 1/200	1/200	7.5	9	270	270	3630	912	
			* 1/240	1/240	6.3	7.5	270	270	3630	912	
	3-Phase 0.75 kW	30 (Small Frame Model)	1/5	1/5	300	360	21	18	1520	375	P.470
			1/7.5	2/15	200	240	31	25	1760	438	
			1/10	1/10	150	180	41	34	1910	475	
			1/12.5	19/235	120	144	52	43	2060	506	
			1/15	1/15	100	120	63	52	2160	539	
			1/20	1/20	75	90	83	70	2400	600	
			1/25	1/25	60	72	104	86	2550	637	
			1/30	1/30	50	60	124	104	2650	662	
		35	1/5	1/5	300	360	21	18	1960	500	P.472
			1/7.5	2/15	200	240	31	25	2250	567	
			1/10	1/10	150	180	41	34	2450	613	
			1/12.5	19/235	120	144	52	43	2600	669	
			1/15	1/15	100	120	63	52	2740	686	
			1/20	1/20	75	90	83	70	2990	747	
			1/25	1/25	60	72	104	86	3190	796	
			1/30	1/30	50	60	124	104	3280	821	
			1/40	1/40	37.5	45	166	138	3480	870	
			1/50	1/50	30	36	208	173	3480	870	
			1/60	1/60	25	30	249	208	3480	870	
		45	1/80	1/80	18.8	22.5	316	263	4750	1177	P.474
			1/100	19/1880	15	18	395	328	4750	1177	
			1/120	1/120	12.5	15	473	395	4750	1177	
			* 1/160	1/160	9.4	11.3	554	526	5190	1275	
			* 1/200	1/200	7.5	9	554	554	5190	1275	
			* 1/240	1/240	6.3	7.5	554	554	5190	1275	

• Please read the notes on page 451.

1-2. Performance Table

Series	Motor Power	Frame Size	Reduction Ratio	Actual Reduction Ratio	Output Shaft Speed		Allowable Output Shaft Torque		Allowable Output Shaft O.H.L.	Allowable Output Shaft Thrust Load	Drawings
					r/min		N·m				
					50 Hz	60 Hz	50 Hz	60 Hz	N	N	
MID	3-Phase 1.5 kW	35 (Small Frame Model)	1/5	1/5	300	360	41	34	1960	500	P.472
			1/7.5	2/15	200	240	63	52	2250	567	
			1/10	1/10	150	180	83	70	2450	613	
			1/12.5	19/235	120	144	104	86	2600	669	
			1/15	1/15	100	120	124	104	2740	686	
			1/20	1/20	75	90	166	138	2990	747	
			1/25	1/25	60	72	208	173	3190	796	
			1/30	1/30	50	60	249	208	3280	821	
		45	1/5	1/5	300	360	41	34	2940	800	P.474
			1/7.5	2/15	200	240	63	52	3330	900	
			1/10	1/10	150	180	83	70	3630	967	
			1/12.5	19/235	120	144	104	86	3920	1040	
			1/15	1/15	100	120	124	104	4070	1067	
			1/20	1/20	75	90	166	138	4460	1067	
			1/25	1/25	60	72	208	173	4700	1067	
			1/30	1/30	50	60	249	208	4750	1067	
			1/40	1/40	37.5	45	332	276	4750	1067	
			1/50	1/50	30	36	416	345	4750	1067	
			1/60	1/60	25	30	498	416	4750	1067	
	3-Phase 2.2 kW	45	1/5	1/5	300	360	61	51	3140	800	P.474
			1/7.5	2/15	200	240	91	76	3530	900	
			1/10	1/10	150	180	122	102	3920	967	
			1/12.5	19/235	120	144	152	126	4120	1040	
			1/15	1/15	100	120	182	152	4410	1067	
			1/20	1/20	75	90	244	203	4750	1067	
			1/25	1/25	60	72	305	254	4750	1067	
			1/30	1/30	50	60	366	305	4750	1067	

• Please read the notes on page 451.

F3 Type Gearmotors/Gearmotors with Brake <Concentric Right Angle Hollow Bore/F3S>

[Notes]

- The values in parentheses ( ) in the drawings are the indications for gearmotors with brake.
- The output shaft speed is the value determined with the motor's synch-speed and the reduction ratio.
- The key for the output shaft is not included.
- In the performance table, ▭ indicates that the shaft rotates clockwise when viewed from the flange surface side on the right when the connection is made as shown on page 548 (CW).
- The startup torque of the single-Phase 0.1 kW motor is 60 to 80 % due to the unit being a capacitor run motor.
- Allowable output shaft O.H.L. is the value at 20 mm from the end of the output shaft.
- The "*" mark indicates a limited torque type. Please make sure to check the allowable output shaft torque in the performance table.

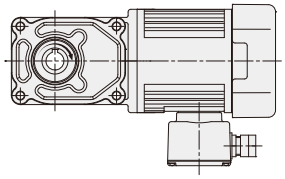

Series	Motor Power	Frame Size	Reduction Ratio	Actual Reduction Ratio	Output Shaft Speed r/min		Allowable Output Shaft Torque N·m		Allowable Output Shaft O.H.L.	Allowable Output Shaft Thrust Load	Drawings
					50 Hz	60 Hz	50 Hz	60 Hz	N	N	
MID	1-Phase 0.1 kW	20	1/5	1/5	300	360	2.5	2.2	980	244	P.465
			1/7.5	2/15	200	240	3.8	3.2	1080	270	
			1/10	1/10	150	180	5.2	4.3	1180	294	
			1/12.5	2/25	120	144	6.5	5.4	1270	316	
			1/15	1/15	100	120	7.7	6.5	1320	333	
			1/20	1/20	75	90	11	8.6	1470	373	
			1/25	1/25	60	72	13	11	1570	392	
			1/30	2/59	50	60	16	13	1670	422	
			1/40	1/40	37.5	45	21	18	1810	451	
			1/50	1/50	30	36	25	22	1860	471	
			1/60	1/59	25	30	31	25	1860	471	
		25	1/80	1/80	18.8	22.5	39	32	2550	637	P.468
			1/100	19/1880	15	18	49	41	2550	637	
			1/120	1/120	12.5	15	59	49	2550	637	
			1/160	1/160	9.4	11.3	78	66	2550	637	
			1/200	1/200	7.5	9	98	81	2550	637	
			* 1/240	1/240	6.3	7.5	101	98	2550	637	
	1-Phase 0.2 kW	25	1/5	1/5	300	360	5.5	4.6	1230	307	P.469
			1/7.5	2/15	200	240	8.3	7	1370	342	
			1/10	1/10	150	180	11	9.2	1520	380	
			1/12.5	19/235	120	144	14	12	1620	405	
			1/15	1/15	100	120	17	14	1720	429	
			1120	1/20	75	90	23	19	1860	466	
			1/25	1/25	60	72	27	24	2010	502	
			1/30	1/30	50	60	33	27	2110	527	
			1140	1/40	37.5	45	44	37	2300	576	
			1/50	1/50	30	36	55	46	2450	613	
			1/60	1/60	25	30	67	55	2550	637	
		30	1/80	1/80	18.8	22.5	84	71	3090	775	P.471
			1/100	19/1880	15	18	105	87	3140	785	
			1/120	1/120	12.5	15	126	105	3140	785	
			1/160	1/160	9.4	11.3	169	140	3140	785	
			* 1/200	1/200	7.5	9	184	175	3140	785	
			* 1/240	1/240	6.3	7.5	184	184	3140	785	
	1-Phase 0.4 kW	30	1/5	1/5	300	360	11	9.2	1520	375	P.471
			1/7.5	2/15	200	240	17	14	1760	438	
			1/10	1/10	150	180	23	19	1910	475	
			1/12.5	19/235	120	144	27	24	2060	506	
			1/15	1/15	100	120	33	27	2160	539	
			1/20	1/20	75	90	44	37	2400	600	
			1/25	1/25	60	72	55	46	2550	637	
			1/30	1/30	50	60	67	55	2650	662	
			1/40	1/40	37.5	45	88	74	2840	711	
			1/50	1/50	30	36	111	92	2990	747	
			1/60	1/60	25	30	133	111	3090	767	
		35	1/80	1/80	18.8	22.5	169	140	3480	873	P.473
			1/100	19/1880	15	18	211	175	3530	883	
			1/120	1/120	12.5	15	253	211	3530	883	
			* 1/160	1/160	9.4	11.3	270	270	3630	912	
			* 1/200	1/200	7.5	9	270	270	3630	912	
			* 1/240	1/240	6.3	7.5	270	270	3630	912	

F2 Type Gearmotors/Gearmotors with Brake <Concentric Right Angle Shaft/F2F>

[Notes]

- The values in parentheses ( ) in the drawings are the indications for gearmotors with brake.
- The output shaft speed is the value determined with the motor's synch-speed and the reduction ratio.
- Allowable output shaft O.H.L. is the value at the middle of the output shaft.
- Two shaft arrangements, L and T, are available for the F2F (concentric Right Angle Hollow Bore).
- The "*" mark indicates a limited torque type. Please make sure to check the allowable output shaft torque value in the performance table.
- In the performance table, the reduction ratio in ▭ indicates that when the connection is made as shown on page 546 (CW), the direction of rotation is clockwise in the case of a three-Phase motor or counterclockwise in the case of a single-Phase motor when viewed from the side indicated by arrow Ⓐ shown in the figure on the right. (Refer to the figure on the right)

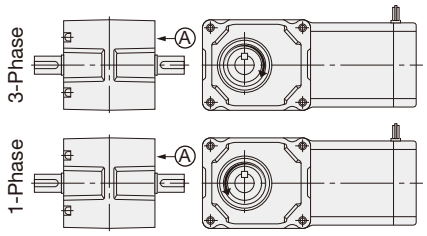

Series	Motor Power	Frame Size	Reduction Ratio	Actual Reduction Ratio	Output Shaft Speed r/min 50 Hz	Output Shaft Speed r/min 60 Hz	Allowable Output Shaft Torque N·m	Allowable Output Shaft O.H.L. N	Drawings
MINI	15 W	15	1/10	4/41	150	180	0.69	343	P.462
			1/15	8/123	100	120	0.98	441	
			1/20	2/41	75	90	1.27	539	
			1/25	8/205	60	72	1.67	588	
			1/30	4/123	50	60	1.96	686	
			1/40	1/41	37.5	45	2.65	784	
			1/50	4/205	30	36	3.33	882	
			1/60	20/1189	25	30	3.92	882	
			1/80	1/82	18.8	22.5	5.00	980	
			1/100	2/205	15	18	6.27	980	
			1/120	1/123	12.5	15	7.45	1080	
			1/160	1/164	9.4	11.2	9.80	1080	
			1/200	1/205	7.5	9	12.7	1080	
			1/240	5/1189	6.3	7.5	14.7	1080	
	25 W	15	1/10	4/41	150	180	1.08	343	P.462
			1/15	8/123	100	120	1.67	441	
			1/20	2/41	75	90	2.25	539	
			1/25	8/205	60	72	2.74	588	
			1/30	4/123	50	60	3.33	686	
			1/40	1/41	37.5	45	4.41	784	
			1/50	4/205	30	36	5.49	882	
			1/60	20/1189	25	30	6.66	882	
			1/80	1/82	18.8	22.5	8.43	980	
			1/100	2/205	15	18	10.8	980	
			1/120	1/123	12.5	15	12.7	1080	
			1/160	1/164	9.4	11.2	16.7	1080	
			1/200	1/205	7.5	9	20.6	1080	
			1/240	5/1189	6.3	7.5	25.5	1080	
	40 W	15	1/10	4/41	150	180	1.76	343	P.462
			1/15	8/123	100	120	2.65	441	
			1/20	2/41	75	90	3.53	539	
			1/25	8/205	60	72	4.41	588	
			1/30	4/123	50	60	5.29	686	
			1/40	1/41	37.5	45	7.06	784	
			1/50	4/205	30	36	8.82	882	
			1/60	20/1189	25	30	10.8	882	
			1/80	1/82	18.8	22.5	13.7	980	
			1/100	2/205	15	18	16.7	980	
			1/120	1/123	12.5	15	20.6	1080	
		18	1/160	1/164	9.4	11.2	26.5	1370	P.463
			1/200	1/205	7.5	9	33.3	1370	
			1/240	1/246	6.3	7.5	40.2	1370	

Series	Motor Power	Frame Size	Reduction Ratio	Actual Reduction Ratio	Output Shaft Speed r/min 50 Hz	Output Shaft Speed r/min 60 Hz	Allowable Output Shaft Torque N·m	Allowable Output Shaft O.H.L. N	Drawings
MINI	60 W	15 (Note 1)	1/10	4/41	150	180	2.74	343	P.462
			1/15	8/123	100	120	4.12	441	
			1/20	2/41	75	90	5.49	539	
			1/25	8/205	60	72	6.96	588	
			1/30	4/123	50	60	8.33	686	
			1/40	1/41	37.5	45	10.8	784	
			1/50	4/205	30	36	13.7	882	
			1/60	20/1189	25	30	16.7	882	
		18 (Note 1)	1/10	4/41	150	180	2.74	343	P.463
			1/15	8/123	100	120	4.12	441	
			1/20	2/41	75	90	5.49	539	
			1/25	8/205	60	72	6.96	588	
			1/30	4/123	50	60	8.33	686	
			1/40	1/41	37.5	45	10.8	784	
			1/50	4/205	30	36	13.7	882	
			1/60	2/123	25	30	16.7	882	
		18	1/80	1/82	18.8	22.5	20.6	1270	P.463
			1/100	2/205	15	18	26.5	1270	
			1/120	1/123	12.5	15	31.4	1370	
			1/160	1/164	9.4	11.2	42.1	1370	
			1/200	1/205	7.5	9	52.9	1370	
			* 1/240	1/246	6.3	7.5	53.9	1370	
	90 W	18	1/10	4/41	150	180	4.12	441	P.463
			1/15	8/123	100	120	6.17	588	
			1/20	2/41	75	90	8.33	735	
			1/25	8/205	60	72	10.8	882	
			1/30	4/123	50	60	12.7	980	
			1/40	1/41	37.5	45	16.7	1080	
			1/50	4/205	30	36	20.6	1180	
			1/60	2/123	25	30	24.5	1180	
			1/80	1/82	18.8	22.5	31.4	1270	
			1/100	2/205	15	18	39.2	1270	
			1/120	1/123	12.5	15	47.0	1370	
			* 1/160	1/164	9.4	11.2	53.9	1370	
			* 1/200	1/205	7.5	9	53.9	1370	
			* 1/240	1/246	6.3	7.5	53.9	1370	

Note 1: The frame size 15 for 60 W motors is only available for Three-phase standard voltage motors (200 V class). Please note that the frame size for Three-phase High Voltage (400 V class) and Single-phase motors will be 18.

F3 Type Gearmotors/Gearmotors with Brake <Concentric Right Angle Shaft/F3F>

[Notes]

- The values in parentheses ( ) in the drawings are the indications for gearmotors with brake.
- The output shaft speed is the value relative to the synchronous speed of the motor and the reduction ratio.
- In the performance table, ▭ indicates that the L shaft rotates clockwise and the R and T shafts rotate counterclockwise when viewed from the output shaft direction when the connection is made as shown on page 547 (CW). (Refer to the figure on the right)
- Allowable output shaft O.H.L. is the value at the middle of the output shaft.
- "*" mark indicates a limited torque type. Please make sure to check the allowable output shaft torque in the performance table.

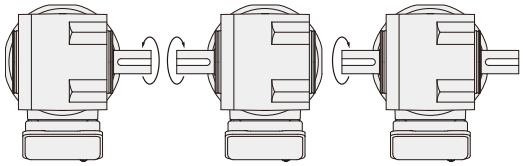

Series	Motor Power	Frame Size	Reduction Ratio	Actual Reduction Ratio	Output Shaft Speed r/min 50 Hz	Output Shaft Speed r/min 60 Hz	Allowable Output Shaft Torque N·m 50 Hz	Allowable Output Shaft Torque N·m 60 Hz	Allowable Output Shaft O.H.L. N	Drawings
MID	3-Phase 0.1 kW	18	1/5	1/5	300	360	2.5	2.2	880	P.475
			1/7.5	2/15	200	240	3.8	3.2	980	
			1/10	1/10	150	180	5.2	4.3	1080	
			1/12.5	2/25	120	144	6.5	5.4	1180	
			1/15	1/15	100	120	7.7	6.5	1230	
			1/20	1/20	75	90	11	8.6	1370	
			1/25	1/25	60	72	13	11	1470	
			1/30	2/59	50	60	16	13	1570	
			1/40	1/40	37.5	45	21	18	1720	
			1/50	1/50	30	36	25	22	1860	
			1/60	1/59	25	30	31	25	1860	
		22	1/80	1/80	18.8	22.5	39	32	2550	P.476
			1/100	19/1880	15	18	49	41	2550	
			1/120	1/120	12.5	15	59	49	2550	
			1/160	1/160	9.4	11.3	78	66	2550	
			1/200	1/200	7.5	9	98	81	2550	
			* 1/240	1/240	6.3	7.5	101	98	2550	
	3-Phase 0.2 kW	18 (Small Frame Model)	1/5	1/5	300	360	5.5	4.6	880	P.475
			1/7.5	2/15	200	240	8.3	7	980	
			1/10	1/10	150	180	11	9.2	1080	
			1/12.5	2/25	120	144	14	12	1180	
			1/15	1/15	100	120	17	14	1230	
			1/20	1/20	75	90	23	19	1370	
			1/25	1/25	60	72	27	24	1470	
			1/30	2/59	50	60	33	27	1570	
		22	1/5	1/5	300	360	5.5	4.6	1270	P.476
			1/7.5	2/15	200	240	8.3	7.0	1420	
			1/10	1/10	150	180	11	9.2	1520	
			1/12.5	19/235	120	144	14	12	1620	
			1/15	1/15	100	120	17	14	1720	
			1/20	1/20	75	90	23	19	1910	
			1/25	1/25	60	72	27	24	2060	
			1/30	1/30	50	60	33	27	2160	
			1/40	1/40	37.5	45	44	37	2400	
			1/50	1/50	30	36	55	46	2550	
			1/60	1/60	25	30	67	55	2550	
		28	1/80	1/80	18.8	22.5	84	71	3090	P.477
			1/100	19/1880	15	18	105	87	3140	
			1/120	1/120	12.5	15	126	105	3140	
			1/160	1/160	9.4	11.3	169	140	3140	
			* 1/200	1/200	7.5	9	184	175	3140	
			* 1/240	1/240	6.3	7.5	184	184	3140	

Series	Motor Power	Frame Size	Reduction Ratio	Actual Reduction Ratio	Output Shaft Speed r/min		Allowable Output Shaft Torque N·m		Allowable Output Shaft O.H.L.	Drawings
					50 Hz	60 Hz	50 Hz	60 Hz	N	
MID	3-Phase 0.4 kW	22 (Small Frame Model)	1/5	1/5	300	360	11	9.2	1270	P.476
			1/7.5	2/15	200	240	17	14	1420	
			1/10	1/10	150	180	23	19	1520	
			1/12.5	19/235	120	144	27	24	1620	
			1/15	1/15	100	120	33	27	1720	
			1/20	1/20	75	90	44	37	1910	
			1/25	1/25	60	72	55	46	2060	
			1/30	1/30	50	60	67	55	2160	
		28	1/5	1/5	300	360	11	9.2	1470	P.477
			1/7.5	2/15	200	240	17	14	1670	
			1/10	1/10	150	180	23	19	1810	
			1/12.5	19/235	120	144	27	24	1960	
			1/15	1/15	100	120	33	27	2060	
			1/20	1/20	75	90	44	37	2300	
			1/25	1/25	60	72	55	46	2450	
			1/30	1/30	50	60	67	55	2600	
			1/40	1/40	37.5	45	88	74	2790	
			1/50	1/50	30	36	111	92	2990	
			1/60	1/60	25	30	133	111	3090	
		32	1/80	1/80	18.8	22.5	169	140	3330	P.478
			1/100	19/1880	15	18	211	175	3380	
			1/120	1/120	12.5	15	253	211	3380	
			* 1/160	1/160	9.4	11.3	270	270	3580	
			* 1/200	1/200	7.5	9	270	270	3630	
			* 1/240	1/240	6.3	7.5	270	270	3630	
	3-Phase 0.75 kW	28 (Small Frame Model)	1/5	1/5	300	360	21	18	1470	P.477
			1/7.5	2/15	200	240	31	25	1670	
			1/10	1/10	150	180	41	34	1810	
			1/12.5	19/235	120	144	52	43	1960	
			1/15	1/15	100	120	63	52	2060	
			1/20	1/20	75	90	83	70	2300	
			1/25	1/25	60	72	104	86	2450	
			1/30	1/30	50	60	124	104	2600	
		32	1/5	1/5	300	360	21	18	1760	P.478
			1/7.5	2/15	200	240	31	25	2010	
			1/10	1/10	150	180	41	34	2210	
			1/12.5	19/235	120	144	52	43	2350	
			1/15	1/15	100	120	63	52	2500	
			1/20	1/20	75	90	83	70	2700	
			1/25	1/25	60	72	104	86	2890	
			1/30	1/30	50	60	124	104	3040	
			1/40	1/40	37.5	45	166	138	3280	
			1/50	1/50	30	36	208	173	3330	
			1/60	1/60	25	30	249	208	3330	
		40	1/80	1/80	18.8	22.5	316	263	4460	P.479
			1/100	19/1880	15	18	395	328	4460	
			1/120	1/120	12.5	15	473	395	4460	
			* 1/160	1/160	9.4	11.3	554	526	4850	
			* 1/200	1/200	7.5	9	554	554	5190	
			* 1/240	1/240	6.3	7.5	554	554	5190	

• Please read the notes on page 457.

1-2. Performance Table

Series	Motor Power	Frame Size	Reduction Ratio	Actual Reduction Ratio	Output Shaft Speed r/min 50 Hz	Output Shaft Speed r/min 60 Hz	Allowable Output Shaft Torque N·m 50 Hz	Allowable Output Shaft Torque N·m 60 Hz	Allowable Output Shaft O.H.L. N	Drawings
MID	3-Phase 1.5 kW	32 (Small Frame Model)	1/5	1/5	300	360	41	34	1760	P.478
			1/7.5	2/15	200	240	63	52	2010	
			1/10	1/10	150	180	83	70	2210	
			1/12.5	19/235	120	144	104	86	2350	
			1/15	1/15	100	120	124	104	2500	
			1/20	1/20	75	90	166	138	2700	
			1/25	1/25	60	72	208	173	2890	
			1/30	1/30	50	60	249	208	3040	
		40	1/5	1/5	300	360	41	34	2500	P.479
			1/7.5	2/15	200	240	63	52	2840	
			1/10	1/10	150	180	83	70	3140	
			1/12.5	19/235	120	144	104	86	3380	
			1/15	1/15	100	120	124	104	3530	
			1/20	1/20	75	90	166	138	3870	
			1/25	1/25	60	72	208	173	4170	
			1/30	1/30	50	60	249	208	4310	
			1/40	1/40	37.5	45	332	276	4460	
			1/50	1/50	30	36	416	346	4460	
			1/60	1/60	25	30	498	416	4460	
	3-Phase 2.2 kW	40	1/5	1/5	300	360	61	51	2940	P.479
			1/7.5	2/15	200	240	91	76	3230	
			1/10	1/10	150	180	122	102	3530	
			1/12.5	19/235	120	144	152	126	3820	
			1/15	1/15	100	120	182	152	4120	
			1/20	1/20	75	90	244	203	4410	
			1/25	1/25	60	72	305	254	4410	
			1/30	1/30	50	60	366	305	4410	

• Please read the notes on page 457.

1-3. Drawings

F2S Type Concentric Right Angle Hollow Bore | Shaft Diameter 12 | **Flange** Mounting

The values in parentheses ( ) are the indications for gearmotors with brake.

<Figure 1>

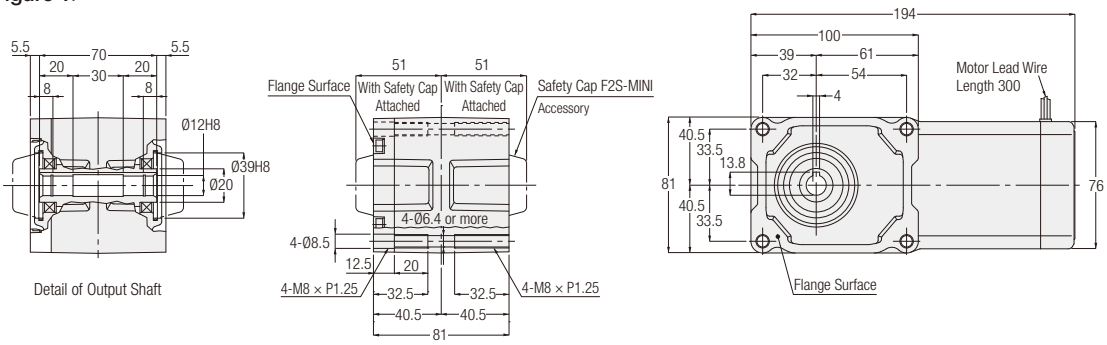

<Figure 2>

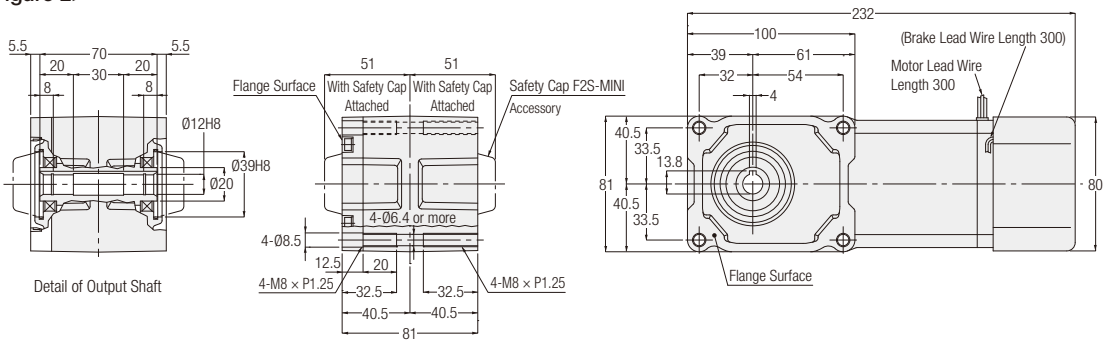

Number of Phases	Power	Part Number	Reduction Ratio	Figure Number	Brake	Approx. Weight (kg)
3-Phase	15 W	F2SM-12-∗∗∗-T15	10, 15, 20, 25, 30, 40, 50, 60, 80, 100, 120, 160, 200, 240	1	No	3
		F2SM-12-∗∗∗-T15W				
		F2SB-12-∗∗∗-T15	10, 15, 20, 25, 30, 40, 50, 60, 80, 100, 120, 160, 200, 240	2	Yes	3.5
		F2SB-12-∗∗∗-T15W				
	25 W	F2SM-12-∗∗∗-T25	10, 15, 20, 25, 30, 40, 50, 60, 80, 100, 120, 160, 200, 240	1	No	3
		F2SM-12-∗∗∗-T25W				
		F2SB-12-∗∗∗-T25	10, 15, 20, 25, 30, 40, 50, 60, 80, 100, 120, 160, 200, 240	2	Yes	3.5
		F2SB-12-∗∗∗-T25W				
	40 W	F2SM-12-∗∗∗-T40	10, 15, 20, 25, 30, 40, 50, 60, 80, 100, 120	1	No	3
		F2SM-12-∗∗∗-T40W		2	No	3.5
		F2SB-12-∗∗∗-T40	10, 15, 20, 25, 30, 40, 50, 60, 80, 100, 120	2	Yes	3.5
		F2SB-12-∗∗∗-T40W				
	60 W	F2SM-12-∗∗∗-T60	10, 15, 20, 25, 30, 40, 50, 60	2	No	3.5
		F2SB-12-∗∗∗-T60		2	Yes	
1-Phase	15 W	F2SM-12-∗∗∗-S15	10, 15, 20, 25, 30, 40, 50, 60, 80, 100, 120, 160, 200, 240	1	No	3
		F2SM-12-∗∗∗-S15W				
		F2SB-12-∗∗∗-S15	10, 15, 20, 25, 30, 40, 50, 60, 80, 100, 120, 160, 200, 240	2	Yes	3.5
		F2SB-12-∗∗∗-S15W				
	25 W	F2SM-12-∗∗∗-S25	10, 15, 20, 25, 30, 40, 50, 60, 80, 100, 120, 160, 200, 240	1	No	3
		F2SM-12-∗∗∗-S25W				
		F2SB-12-∗∗∗-S25	10, 15, 20, 25, 30, 40, 50, 60, 80, 100, 120, 160, 200, 240	2	Yes	3.5
		F2SB-12-∗∗∗-S25W				
	40 W	F2SM-12-∗∗∗-S40	10, 15, 20, 25, 30, 40, 50, 60, 80, 100, 120	2	No	3.5
		F2SM-12-∗∗∗-S40W				
		F2SB-12-∗∗∗-S40	10, 15, 20, 25, 30, 40, 50, 60, 80, 100, 120	2	Yes	3.5
		F2SB-12-∗∗∗-S40W				

Note: A reduction ratio will be indicated as ∗∗∗ in the nomenclature.
Note: Please refer to page 449 for the performance table.

F2S Type Concentric Right Angle Hollow Bore | Shaft Diameter 15 | **Flange** Mounting

The values in parentheses ( ) are the indications for gearmotors with brake.

<Figure 1>

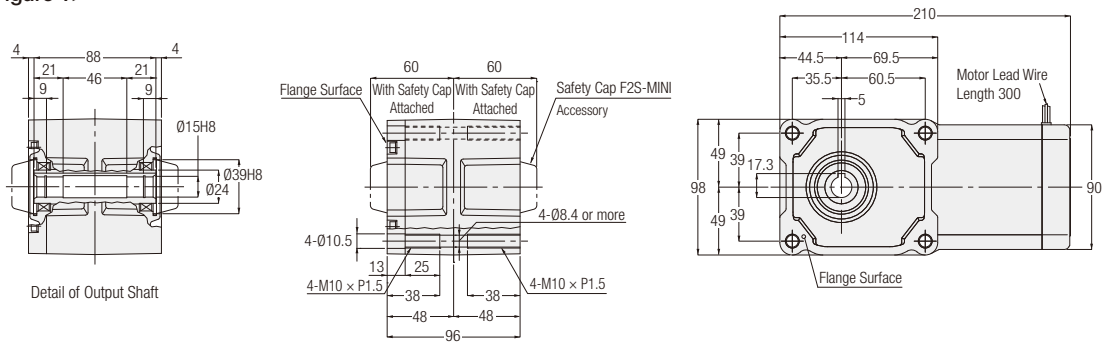

<Figure 2>

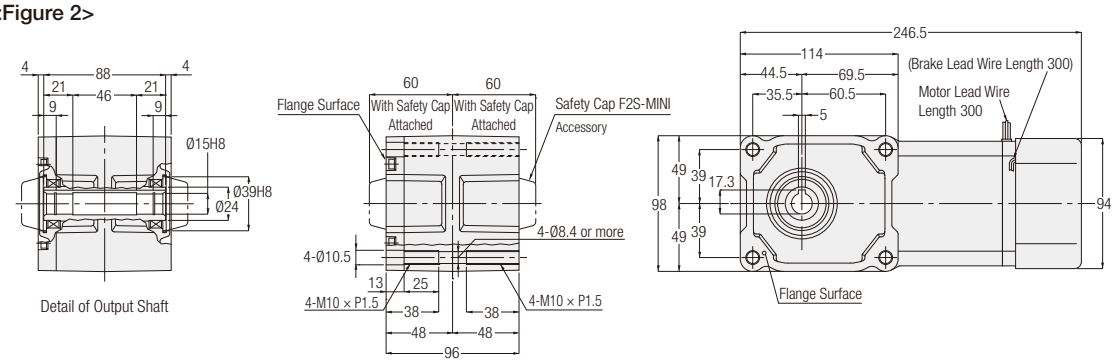

Number of Phases	Power	Part Number	Reduction Ratio	Figure Number	Brake	Approx. Weight (kg)
3-Phase	40 W	F2SM-15-∗∗∗-T40	160, 200, 240	1	No	4
		F2SM-15-∗∗∗-T40W				
		F2SB-15-∗∗∗-T40	160, 200, 240	2	Yes	4.5
		F2SB-15-∗∗∗-T40W				
	60 W	F2SM-15-∗∗∗-T60	80, 100, 120, 160, 200, 240	1	No	4
		F2SM-15-∗∗∗-T60W	10, 15, 20, 25, 30, 40, 50, 60, 80, 100, 120, 160, 200, 240	1		
		F2SB-15-∗∗∗-T60	80, 100, 120, 160, 200, 240	2	Yes	4.5
		F2SB-15-∗∗∗-T60W	10, 15, 20, 25, 30, 40, 50, 60, 80, 100, 120, 160, 200, 240	2		
	90 W	F2SM-15-∗∗∗-T90	10, 15, 20, 25, 30, 40, 50, 60, 80, 100, 120, 160, 200, 240	1	No	4
		F2SM-15-∗∗∗-T90W		2	No	4.5
		F2SB-15-∗∗∗-T90	10, 15, 20, 25, 30, 40, 50, 60, 80, 100, 120, 160, 200, 240	2	Yes	4.5
		F2SB-15-∗∗∗-T90W				
1-Phase	40 W	F2SM-15-∗∗∗-S40	160, 200, 240	1	No	4
		F2SM-15-∗∗∗-S40W				
		F2SB-15-∗∗∗-S40	160, 200, 240	2	Yes	4.5
		F2SB-15-∗∗∗-S40W				
	60 W	F2SM-15-∗∗∗-S60	10, 15, 20, 25, 30, 40, 50, 60, 80, 100, 120, 160, 200, 240	2	No	4
		F2SM-15-∗∗∗-S60W				
		F2SB-15-∗∗∗-S60	10, 15, 20, 25, 30, 40, 50, 60, 80, 100, 120, 160, 200, 240	2	Yes	4.5
		F2SB-15-∗∗∗-S60W				
	90 W	F2SM-15-∗∗∗-S90	10, 15, 20, 25, 30, 40, 50, 60, 80, 100, 120, 160, 200, 240	2	No	4.5
		F2SM-15-∗∗∗-S90W				
		F2SB-15-∗∗∗-S90	10, 15, 20, 25, 30, 40, 50, 60, 80, 100, 120, 160, 200, 240	2	Yes	4.5
		F2SB-15-∗∗∗-S90W				

Note: A reduction ratio will be indicated as ∗∗∗ in the nomenclature.
Note: Please refer to page 449 for the performance table.

F2F Type Concentric Right Angle Shaft | Shaft Diameter **15** | **Flange** Mounting

The values in parentheses ( ) are the indications for gearmotors with brake.

<Figure 1>

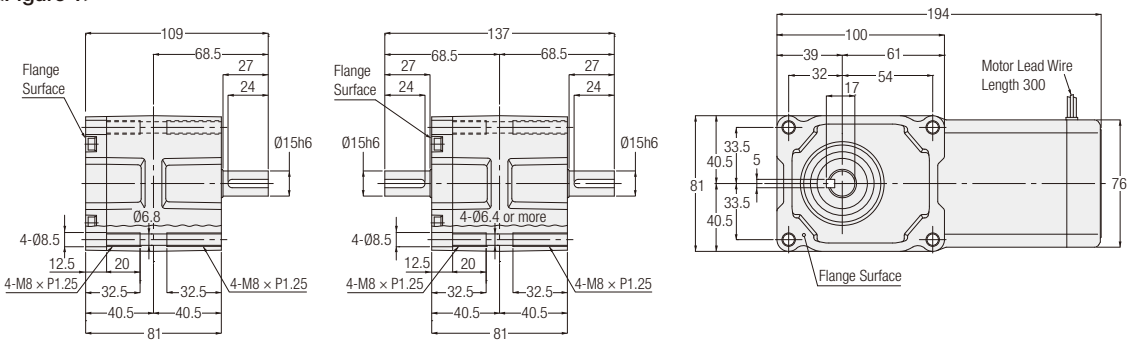

<Figure 2>

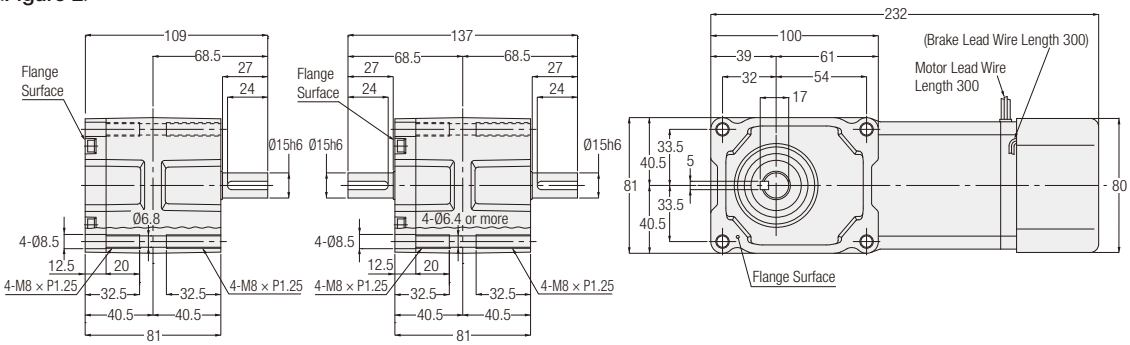

L Shaft T Shaft

Number of Phases	Power	Part Number	Reduction Ratio	Figure Number	Brake	Approx. Weight (kg)
3-Phase	15 W	F2FM-15#-***-T15	10, 15, 20, 25, 30, 40, 50, 60, 80, 100, 120, 160, 200, 240	1	No	3
		F2FM-15#-***-T15W				
		F2FB-15#-***-T15	10, 15, 20, 25, 30, 40, 50, 60, 80, 100, 120, 160, 200, 240	2	Yes	3.5
		F2FB-15#-***-T15W				
	25 W	F2FM-15#-***-T25	10, 15, 20, 25, 30, 40, 50, 60, 80, 100, 120, 160, 200, 240	1	No	3
		F2FM-15#-***-T25W				
		F2FB-15#-***-T25	10, 15, 20, 25, 30, 40, 50, 60, 80, 100, 120, 160, 200, 240	2	Yes	3.5
		F2FB-15#-***-T25W				
	40 W	F2FM-15#-***-T40	10, 15, 20, 25, 30, 40, 50, 60, 80, 100, 120	1	No	3
		F2FM-15#-***-T40W		2	No	3.5
		F2FB-15#-***-T40	10, 15, 20, 25, 30, 40, 50, 60, 80, 100, 120	2	Yes	3.5
		F2FB-15#-***-T40W				
	60 W	F2FM-15#-***-T60	10, 15, 20, 25, 30, 40, 50, 60	2	No	3.5
		F2FB-15#-***-T60		2	Yes	
1-Phase	15 W	F2FM-15#-***-S15	10, 15, 20, 25, 30, 40, 50, 60, 80, 100, 120, 160, 200, 240	1	No	3
		F2FM-15#-***-S15W				
		F2FB-15#-***-S15	10, 15, 20, 25, 30, 40, 50, 60, 80, 100, 120, 160, 200, 240	2	Yes	3.5
		F2FB-15#-***-S15W				
	25 W	F2FM-15#-***-S25	10, 15, 20, 25, 30, 40, 50, 60, 80, 100, 120, 160, 200, 240	1	No	3
		F2FM-15#-***-S25W				
		F2FB-15#-***-S25	10, 15, 20, 25, 30, 40, 50, 60, 80, 100, 120, 160, 200, 240	2	Yes	3.5
		F2FB-15#-***-S25W				
	40 W	F2FM-15#-***-S40	10, 15, 20, 25, 30, 40, 50, 60, 80, 100, 120	2	No	3.5
		F2FM-15#-***-S40W				
		F2FB-15#-***-S40	10, 15, 20, 25, 30, 40, 50, 60, 80, 100, 120	2	Yes	3.5
		F2FB-15#-***-S40W				

Note: A shaft arrangement (L, T) will be indicated as # in the nomenclature. In addition, a reduction ratio is indicated as ***.
Note: Please refer to page 455 for the performance table.

F2F Type Concentric Right Angle Shaft | Shaft Diameter 18 | **Flange** Mounting

The values in parentheses ( ) are the indications for gearmotors with brake.

<Figure 1>

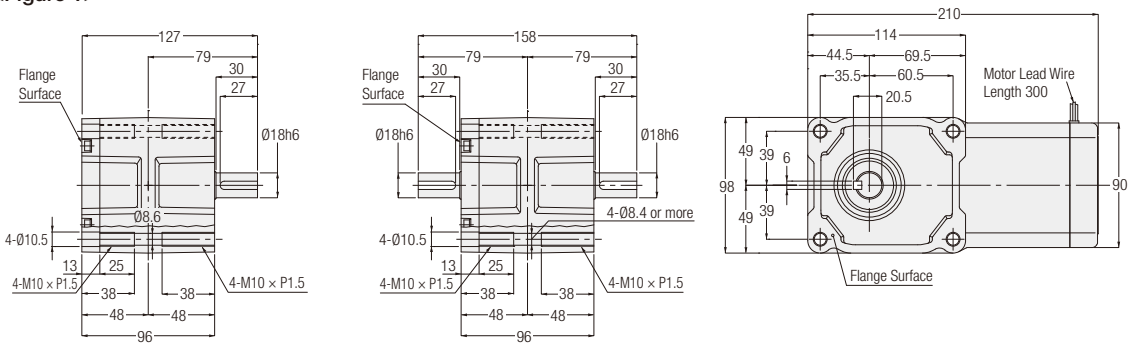

<Figure 2>

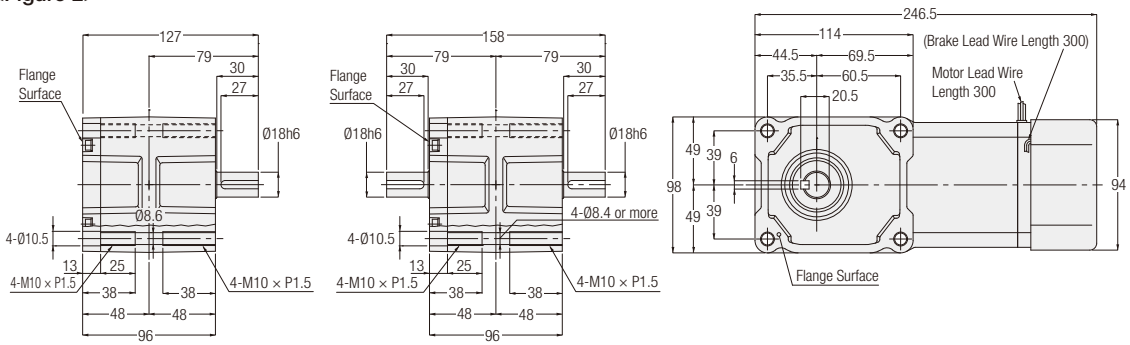

L Shaft **T Shaft**

Number of Phases	Power	Part Number	Reduction Ratio	Figure Number	Brake	Approx. Weight (kg)
3-Phase	40 W	F2FM-18#-***-T40	160, 200, 240	1	No	4
		F2FM-18#-***-T40W				
		F2FB-18#-***-T40	160, 200, 240	2	Yes	4.5
		F2FB-18#-***-T40W				
	60 W	F2FM-18#-***-T60	80, 100, 120, 160, 200, 240	1	No	4
		F2FM-18#-***-T60W	10, 15, 20, 25, 30, 40, 50, 60, 80, 100, 120, 160, 200, 240	1		
		F2FB-18#-***-T60	80, 100, 120, 160, 200, 240	2	Yes	4.5
		F2FB-18#-***-T60W	10, 15, 20, 25, 30, 40, 50, 60, 80, 100, 120, 160, 200, 240	2		
	90 W	F2FM-18#-***-T90	10, 15, 20, 25, 30, 40, 50, 60, 80, 100, 120, 160, 200, 240	1	No	4
		F2FM-18#-***-T90W		2	No	4.5
		F2FB-18#-***-T90	10, 15, 20, 25, 30, 40, 50, 60, 80, 100, 120, 160, 200, 240	2	Yes	4.5
		F2FB-18#-***-T90W				
1-Phase	40 W	F2FM-18#-***-S40	160, 200, 240	1	No	4
		F2FM-18#-***-S40W				
		F2FB-18#-***-S40	160, 200, 240	2	Yes	4.5
		F2FB-18#-***-S40W				
	60 W	F2FM-18#-***-S60	10, 15, 20, 25, 30, 40, 50, 60, 80, 100, 120, 160, 200, 240	1	No	4
		F2FM-18#-***-S60W				
		F2FB-18#-***-S60	10, 15, 20, 25, 30, 40, 50, 60, 80, 100, 120, 160, 200, 240	2	Yes	4.5
		F2FB-18#-***-S60W				
	90 W	F2FM-18#-***-S90	10, 15, 20, 25, 30, 40, 50, 60, 80, 100, 120, 160, 200, 240	2	No	4.5
		F2FM-18#-***-S90W				
		F2FB-18#-***-S90	10, 15, 20, 25, 30, 40, 50, 60, 80, 100, 120, 160, 200, 240	2	Yes	4.5
		F2FB-18#-***-S90W				

Note: A shaft arrangement (L, T) will be indicated as # in the nomenclature. In addition, a reduction ratio is indicated as ***.
Note: Please refer to page 455 for the performance table.

F3S Type Concentric Right Angle Hollow Bore | Shaft Diameter **20** | **Flange** Mounting

The values in parentheses ( ) are the indications for gearmotors with brake.

<Figure 1>

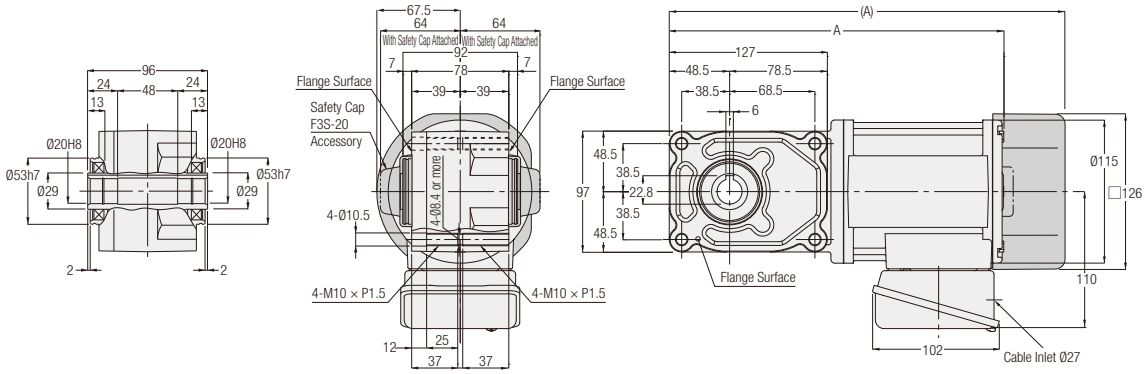

Number of Phases	Power	Part Number	Reduction Ratio	Figure Number	Brake	Approx. Weight (kg)	A
3-Phase	0.1 kW	F3S20N∗∗∗-MM01T◇◇TN	5, 7.5, 10, 12.5, 15, 20, 25, 30, 40, 50, 60	1	No	6.5	254
	0.1 kW	F3S20N∗∗∗-MM01T◇◇TB◆	5, 7.5, 10, 12.5, 15, 20, 25, 30, 40, 50, 60	1	Yes	8	294
	0.2 kW	F3S20N∗∗∗-MM02T◇◇TN	5, 7.5, 10, 12.5, 15, 20, 25, 30	1	No	7.5	269
	0.2 kW	F3S20N∗∗∗-MM02T◇◇TB◆	5, 7.5, 10, 12.5, 15, 20, 25, 30	1	Yes	9	319.5

Note: A reduction ratio will be indicated as ∗∗∗ in the nomenclature. In addition, a supply voltage/certification code will be indicated as ◇◇, and brake specification will be indicated as ◆.

Note: When the reduction ratio is 7.5, “7” will be indicated as ∗∗∗ in the nomenclature, and when the reduction ratio is 12.5, “12” will be indicated as ∗∗∗ in the nomenclature.

Note: Please refer to page 451 for the performance table.

F3S Type Concentric Right Angle Hollow Bore | Shaft Diameter **20** | **Flange** Mounting

The values in parentheses ( ) are the indications for gearmotors with brake.

<Figure 1>

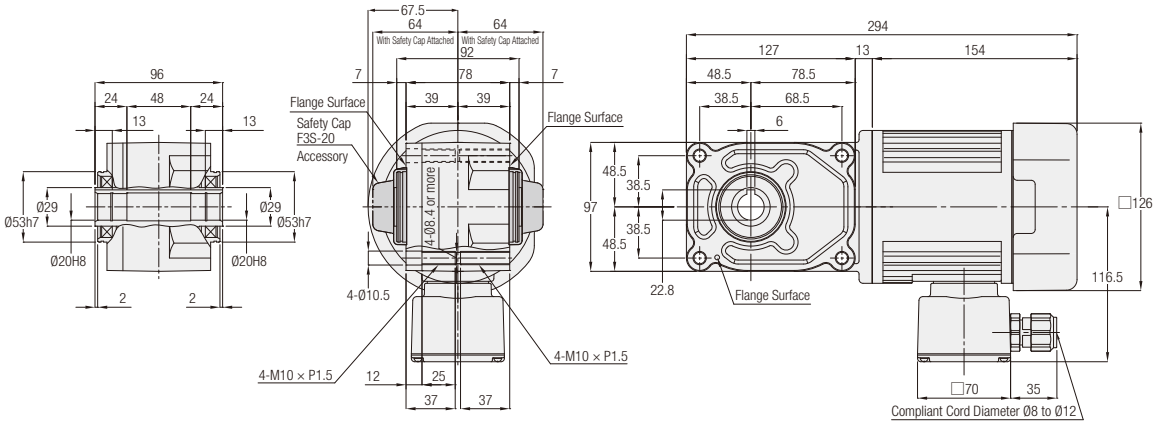

<Figure 2>

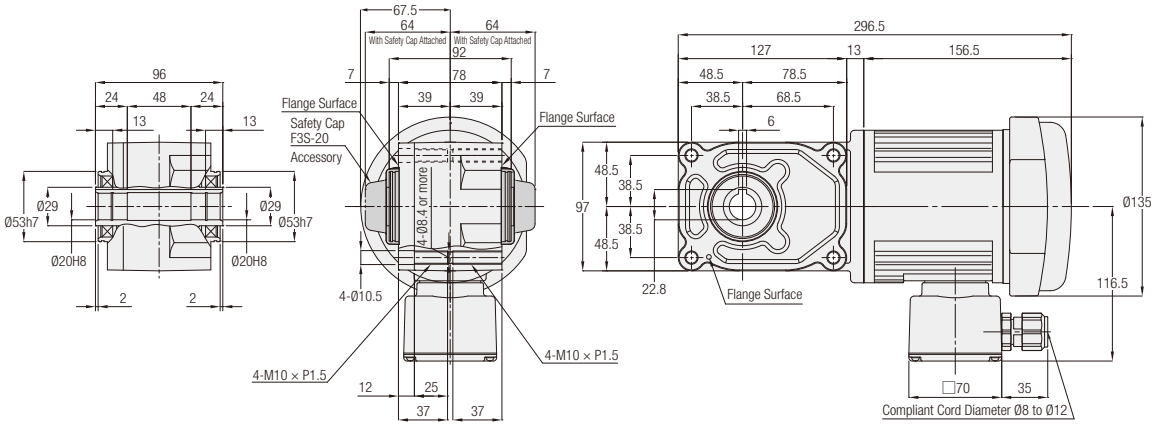

Number of Phases	Power	Part Number	Reduction Ratio	Figure Number	Brake	Approx. Weight (kg)
1-Phase	0.1 kW	F3S20N∗∗∗-MM01S◇JAN	5, 7.5, 10, 12.5, 15, 20, 25, 30, 40, 50, 60	1	No	7
		F3S20N∗∗∗-MM01S◇JAB2	5, 7.5, 10, 12.5, 15, 20, 25, 30, 40, 50, 60	2	Yes	8

Note: A reduction ratio will be indicated as ∗∗∗ in the nomenclature. In addition, a supply voltage code will be indicated as ◇.
Note: When the reduction ratio is 7.5, "7" will be indicated as ∗∗∗ in the nomenclature, and when the reduction ratio is 12.5, "12" will be indicated as ∗∗∗ in the nomenclature.
Note: Please refer to page 454 for the performance table.

F3S Type Concentric Right Angle Hollow Bore | Shaft Diameter **25** | **Flange** Mounting

The values in parentheses ( ) are the indications for gearmotors with brake.

<Figure 1>

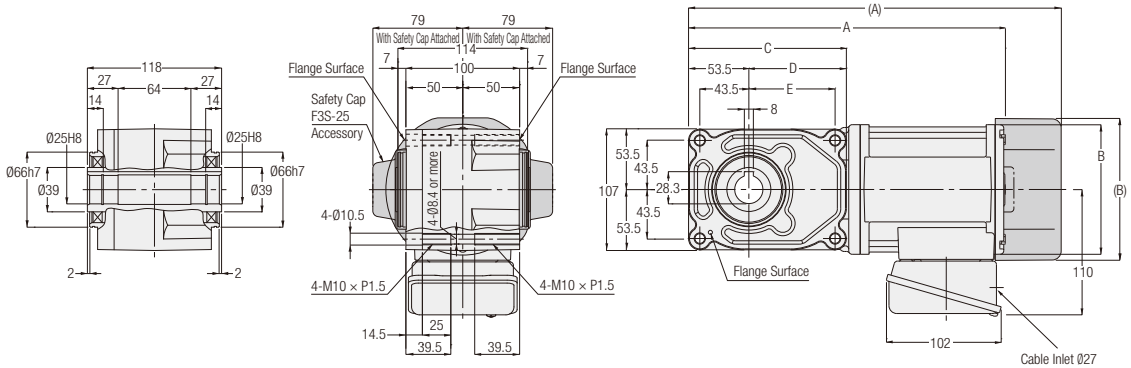

<Figure 2>

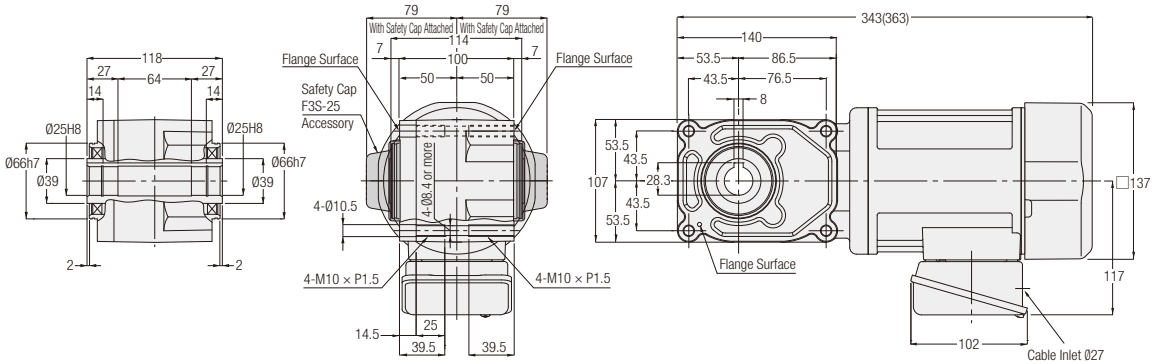

Number of Phases	Power	Part Number	Reduction Ratio	Figure Number	Brake	Approx. Weight (kg)	A	B	C	D	E
3-Phase	0.1 kW	F3S25N∗∗∗-MM01T◇◇TN	80, 100, 120, 160, 200, 240	1	No	8	285	Ø115	159	105.5	95.5
		F3S25N∗∗∗-MM01T◇◇TB◆			Yes	9.5	325	□126	159	105.5	95.5
	0.2 kW	F3S25N∗∗∗-MM02T◇◇TN	5, 7.5, 10, 12.5, 15, 20, 25, 30, 40, 50, 60	1	No	8.5	281.5	Ø115	140	86.5	76.5
		F3S25N∗∗∗-MM02T◇◇TB◆			Yes	10	332	□126	140	86.5	76.5
	0.4 kW	F3S25N∗∗∗-MM04T◇◇TN	5, 7.5, 10, 12.5, 15, 20, 25, 30	2	No	10.5	-	-	-	-	-
		F3S25N∗∗∗-MM04T◇◇TB◆			Yes	12	-	-	-	-	-

Note: A reduction ratio will be indicated as ∗∗∗ in the nomenclature. In addition, a supply voltage/certification code will be indicated as ◇◇, and brake specification will be indicated as ◆.

Note: When the reduction ratio is 7.5, “7” will be indicated as ∗∗∗ in the nomenclature, and when the reduction ratio is 12.5, “12” will be indicated as ∗∗∗ in the nomenclature.

Note: Please refer to page 451 for the performance table.

MEMO

F3S Type Concentric Right Angle Hollow Bore | Shaft Diameter **25** | **Flange** Mounting

The values in parentheses ( ) are the indications for gearmotors with brake.

<Figure 1>

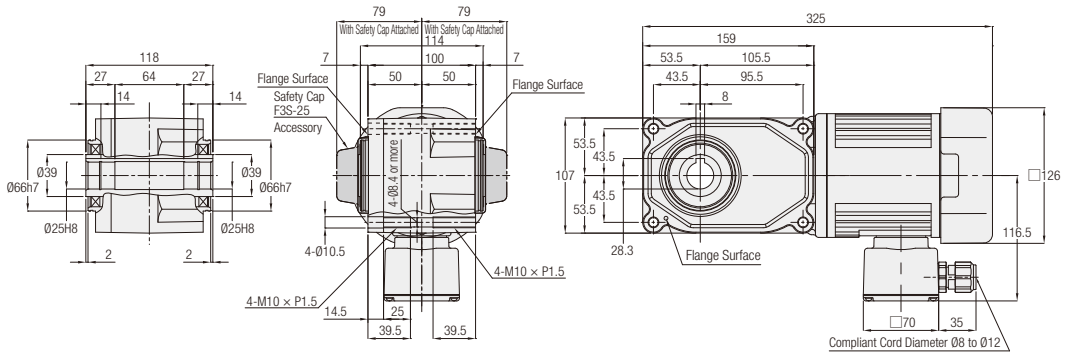

<Figure 2>

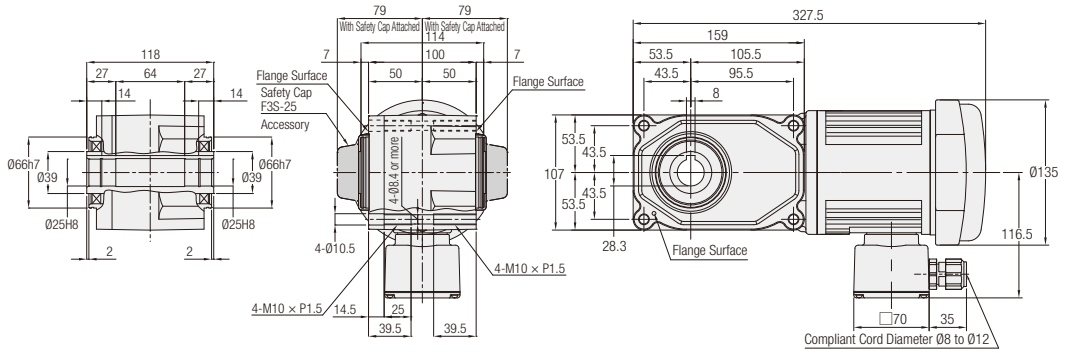

Number of Phases	Power	Part Number	Reduction Ratio	Figure Number	Brake	Approx. Weight (kg)
1-Phase	0.1 kW	F3S25N∗∗∗-MM01S◇JAN	80, 100, 120, 160, 200, 240	1	No	9
		F3S25N∗∗∗-MM01S◇JAB2	80, 100, 120, 160, 200, 240	2	Yes	10

Note: A reduction ratio will be indicated as ∗∗∗ in the nomenclature. In addition, a supply voltage code will be indicated as ◇.
Note: Please refer to page 454 for the performance table.

<Figure 3>

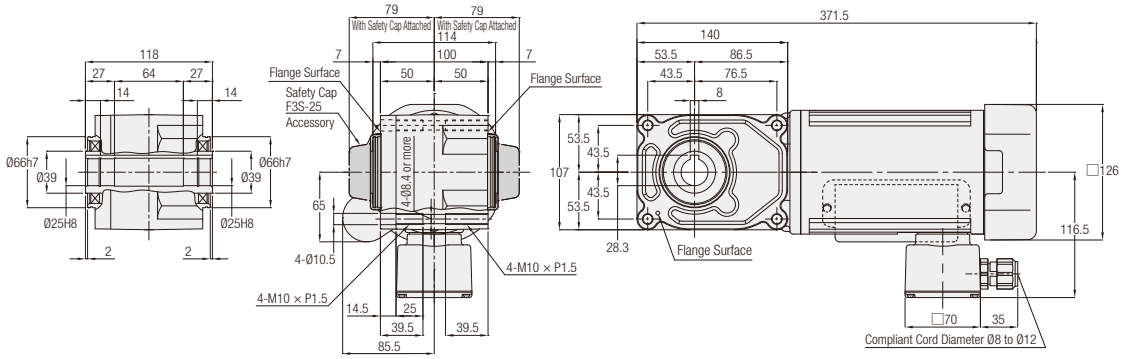

<Figure 4>

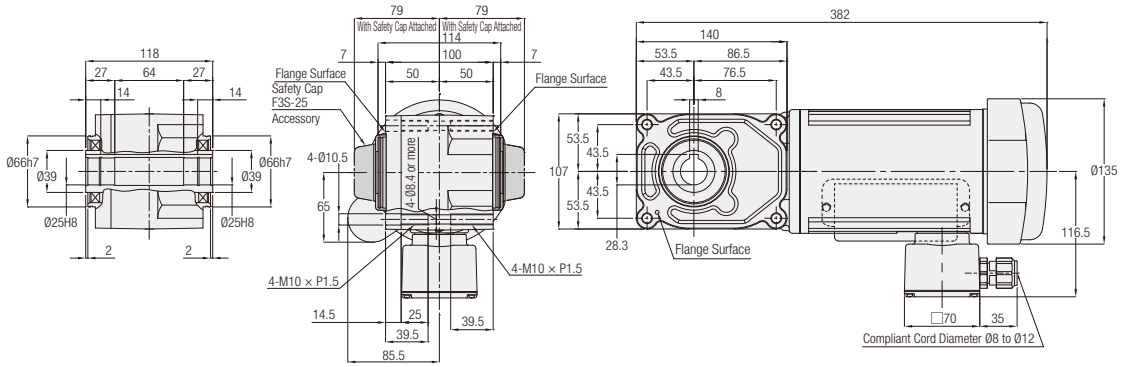

Number of Phases	Power	Part Number	Reduction Ratio	Figure Number	Brake	Approx. Weight (kg)
1-Phase	0.2 kW	F3S25N∗∗∗-MM02C◇JAN	5, 7.5, 10, 12.5, 15, 20, 25, 30, 40, 50, 60	3	No	11.5
		F3S25N∗∗∗-MM02C◇JAB2	5, 7.5, 10, 12.5, 15, 20, 25, 30, 40, 50, 60	4	Yes	13

Note: A reduction ratio will be indicated as ∗∗∗ in the nomenclature. In addition, a supply voltage code will be indicated as ◇.
Note: When the reduction ratio is 7.5, “7” will be indicated as ∗∗∗ in the nomenclature, and when the reduction ratio is 12.5, “12” will be indicated as ∗∗∗ in the nomenclature.
Note: Please refer to page 454 for the performance table.

F3S Type Concentric Right Angle Hollow Bore | Shaft Diameter **30** | **Flange** Mounting

The values in parentheses ( ) are the indications for gearmotors with brake.

<Figure 1>

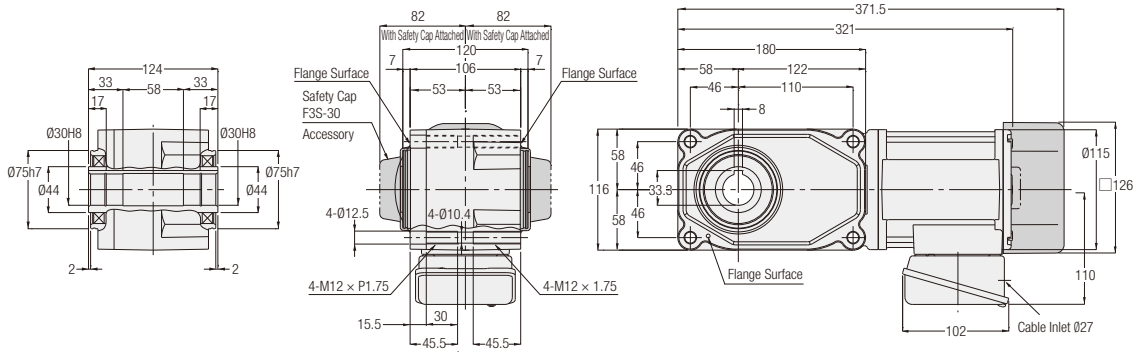

<Figure 2>

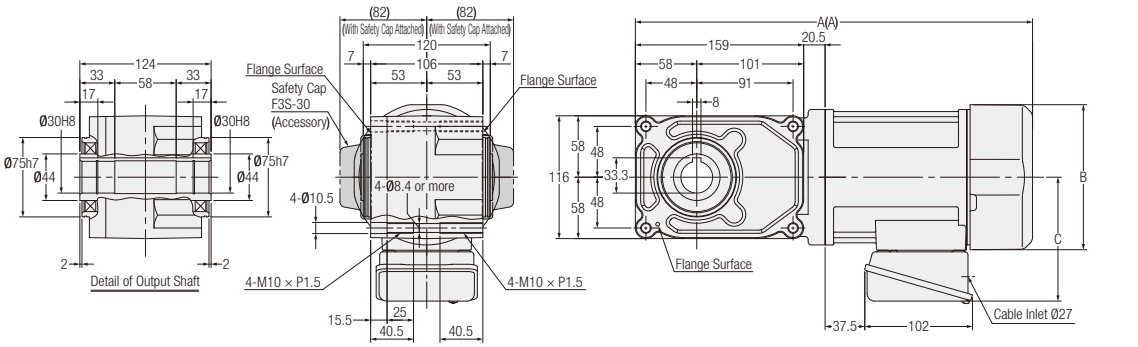

<Figure 3>

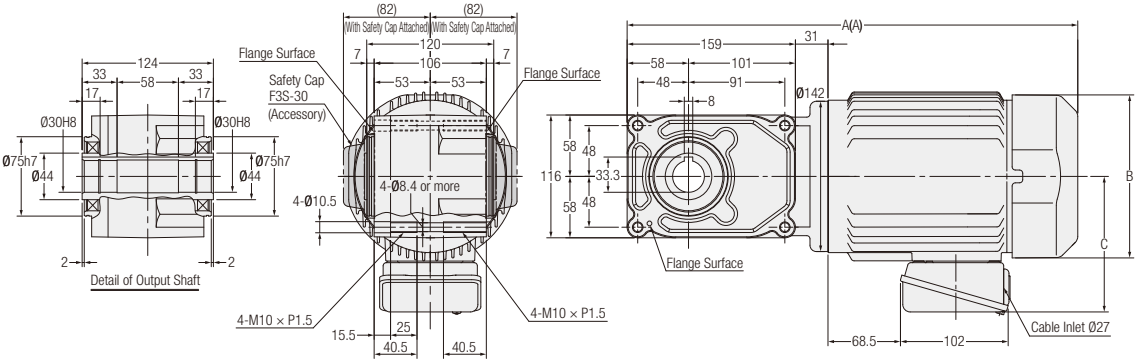

Number of Phases	Power	Part Number	Reduction Ratio	Figure Number	Brake	Approx. Weight (kg)	A	B	C
3-Phase	0.2 kW	F3S30N∗∗∗-MM02T◇◇TN	80, 100, 120, 160, 200, 240	1	No	10	-	-	-
		F3S30N∗∗∗-MM02T◇◇TB◆			Yes	11.5	-	-	-
	0.4 kW	F3S30N∗∗∗-MM04T◇◇TN	5, 7.5, 10, 12.5, 15, 20, 25, 30, 40, 50, 60	2	No	11.5	355.5	□137	117
		F3S30N∗∗∗-MM04T◇◇TB◆			Yes	13	375.5	□137	117
	0.75 kW	F3S30N∗∗∗-MR08T◇◇TN	5, 7.5, 10, 12.5, 15, 20, 25, 30	3	No	18.5	407	□154	128
		F3S30N∗∗∗-MR08T◇◇TB◆			Yes	20.5	426	□154	128

Note: A reduction ratio will be indicated as ∗∗∗ in the nomenclature. In addition, a supply voltage/certification code will be indicated as ◇◇, and brake specification will be indicated as ◆.

Note: When the reduction ratio is 7.5, “7” will be indicated as ∗∗∗ in the nomenclature, and when the reduction ratio is 12.5, “12” will be indicated as ∗∗∗ in the nomenclature.

Note: Please refer to page 451 for the performance table.

F3S Type Concentric Right Angle Hollow Bore | Shaft Diameter **30** | **Flange** Mounting

The values in parentheses ( ) are the indications for gearmotors with brake.

<Figure 1>

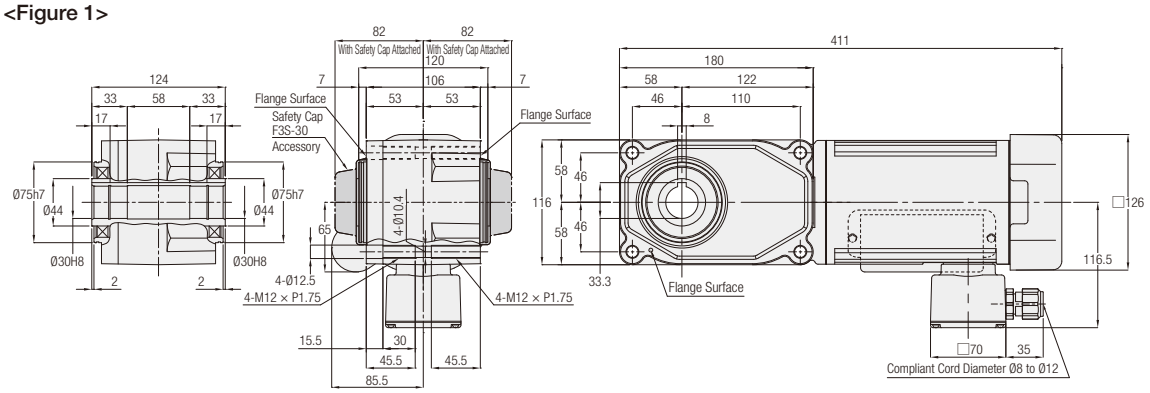

<Figure 2>

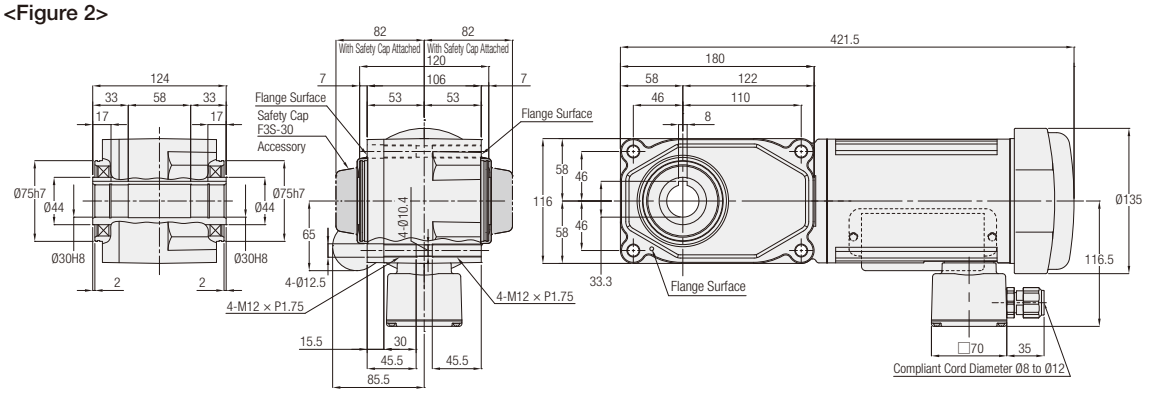

<Figure 3>

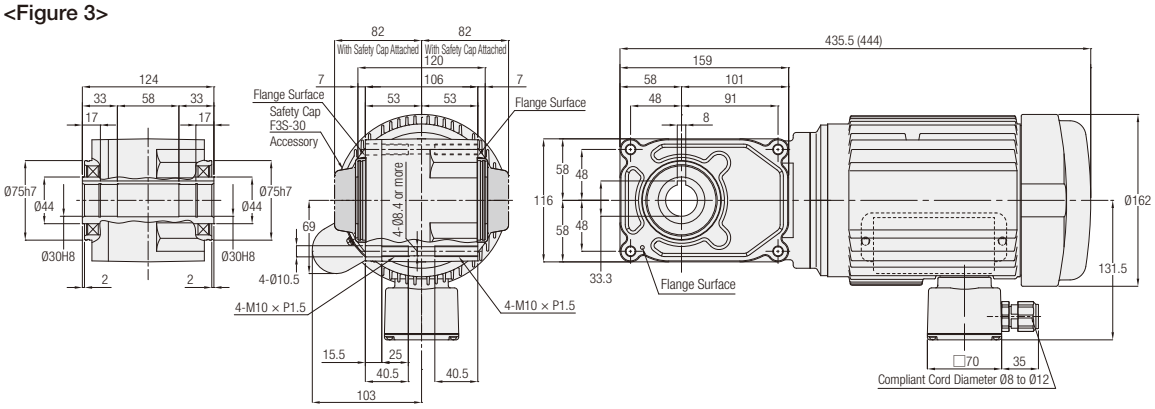

Number of Phases	Power	Part Number	Reduction Ratio	Figure Number	Brake	Approx. Weight (kg)
1-Phase	0.2 kW	F3S30N∗∗∗-MM02C◇JAN	80, 100, 120, 160, 200, 240	1	No	13
		F3S30N∗∗∗-MM02C◇JAB2	80, 100, 120, 160, 200, 240	2	Yes	14.5
	0.4 kW	F3S30N∗∗∗-MM04C◇JAN	5, 7.5, 10, 12.5, 15, 20, 25, 30, 40, 50, 60	3	No	17.5
		F3S30N∗∗∗-MM04C◇JAB2			Yes	20

Note: A reduction ratio will be indicated as ∗∗∗ in the nomenclature. In addition, a supply voltage code will be indicated as ◇.
Note: When the reduction ratio is 7.5, “7” will be indicated as ∗∗∗ in the nomenclature, and when the reduction ratio is 12.5, “12” will be indicated as ∗∗∗ in the nomenclature.
Note: Please refer to page 454 for the performance table.

F3S Type Concentric Right Angle Hollow Bore | Shaft Diameter 35 | Flange Mounting

The values in parentheses ( ) are the indications for gearmotors with brake.

<Figure 1>

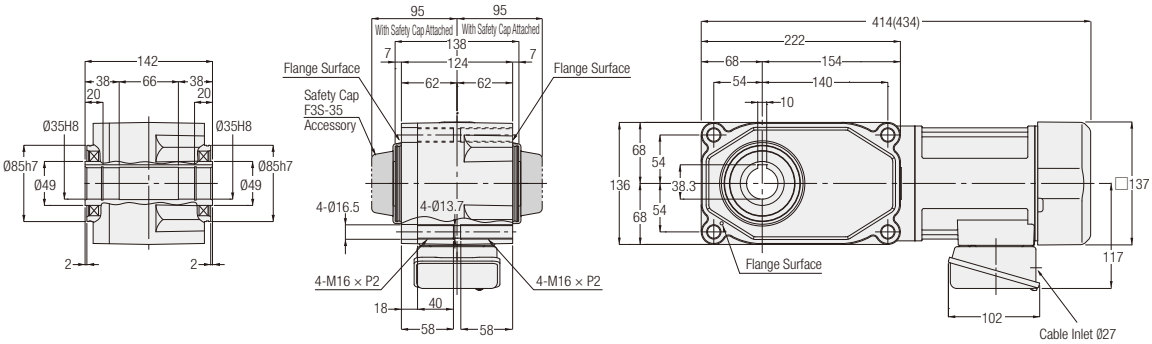

<Figure 2>

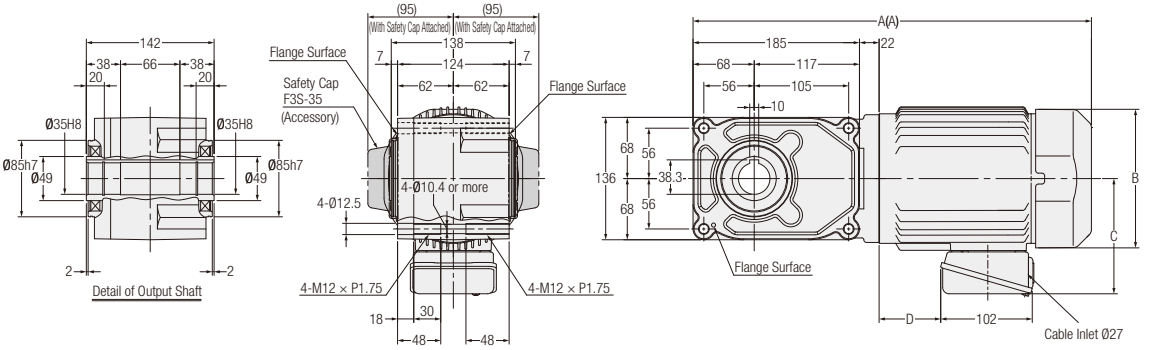

Number of Phases	Power	Part Number	Reduction Ratio	Figure Number	Brake	Approx. Weight (kg)	A	B	C	D
3-Phase	0.4 kW	F3S35N∗∗∗-MM04T◇◇TN	80, 100, 120, 160, 200, 240	1	No	15	-	-	-	-
		F3S35N∗∗∗-MM04T◇◇TB◆			Yes	17	-	-	-	-
	0.75 kW	F3S35N∗∗∗-MR08T◇◇TN	5, 7.5, 10, 12.5, 15, 20, 25, 30, 40, 50, 60	2	No	21	424	□154	128	68.5
		F3S35N∗∗∗-MR08T◇◇TB◆			Yes	23	443	□154	128	68.5
	1.5 kW	F3S35N∗∗∗-MR15T◇◇TN	5, 7.5, 10, 12.5, 15, 20, 25, 30	2	No	28	475	□178	139	91
		F3S35N∗∗∗-MR15T◇◇TB◆			Yes	31	504	□178	139	91

Note: A reduction ratio will be indicated as ∗∗∗ in the nomenclature. In addition, a supply voltage/certification code will be indicated as ◇◇, and brake specification will be indicated as ◆.

Note: When the reduction ratio is 7.5, “7” will be indicated as ∗∗∗ in the nomenclature, and when the reduction ratio is 12.5, “12” will be indicated as ∗∗∗ in the nomenclature.

Note: Please refer to page 452 for the performance table.

F3S Type Concentric Right Angle Hollow Bore | Shaft Diameter 35 | **Flange** Mounting

The values in parentheses ( ) are the indications for gearmotors with brake.

<Figure 1>

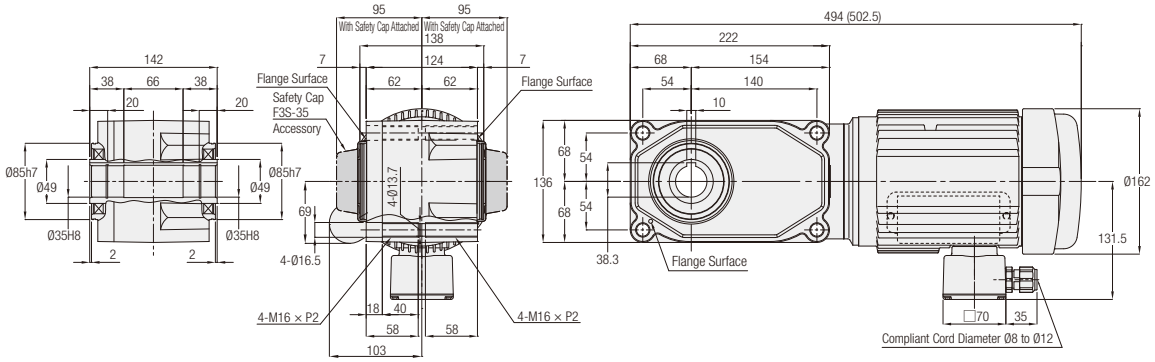

Number of Phases	Power	Part Number	Reduction Ratio	Figure Number	Brake	Approx. Weight (kg)
1-Phase	0.4 kW	F3S35N∗∗∗-MM04C◇JAN	80, 100, 120, 160, 200, 240	1	No	21
		F3S35N∗∗∗-MM04C◇JAB2			Yes	23.5

Note: A reduction ratio will be indicated as ∗∗∗ in the nomenclature. In addition, a supply voltage code will be indicated as ◇.
Note: Please refer to page 454 for the performance table.

F3S Type Concentric Right Angle Hollow Bore — Shaft Diameter 45 — Flange Mounting

The values in parentheses ( ) are the indications for gearmotors with brake.

<Figure 1>

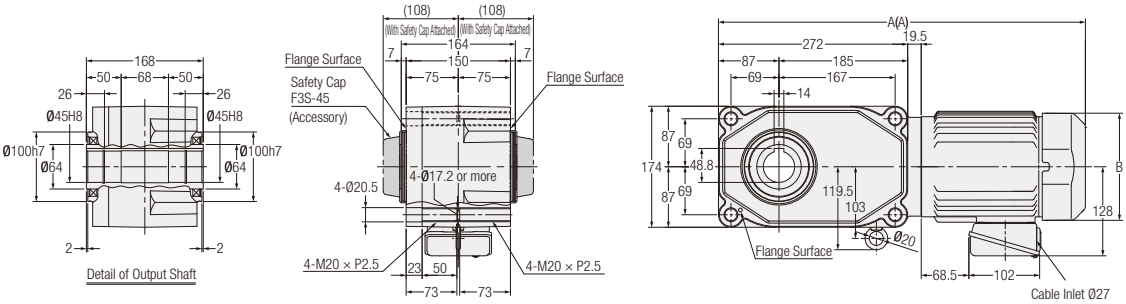

<Figure 2>

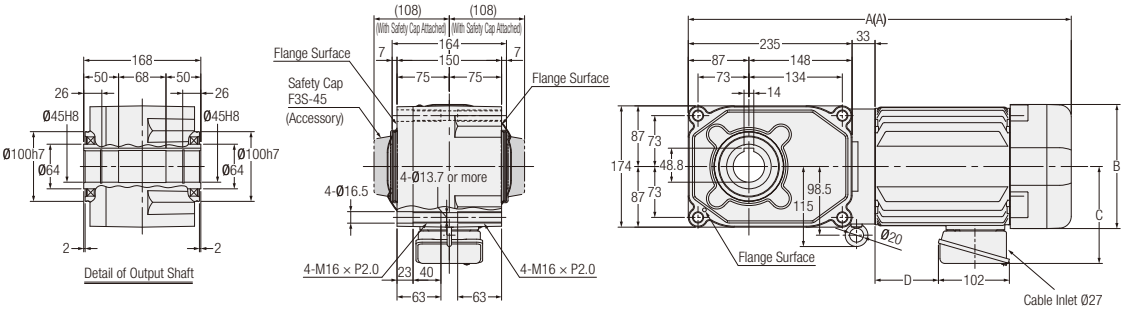

Number of Phases	Power	Part Number	Reduction Ratio	Figure Number	Brake	Approx. Weight (kg)	A	B	C	D
3-Phase	0.75 kW	F3S45N∗∗∗-MR08T◇◇TN	80, 100, 120, 160, 200, 240	1	No	28.5	508.5	□154	-	-
		F3S45N∗∗∗-MR08T◇◇TB◆			Yes	30.5	527.5	□154	-	-
	1.5 kW	F3S45N∗∗∗-MR15T◇◇TN	5, 7.5, 10, 12.5, 15, 20, 25, 30, 40, 50, 60	2	No	35.5	520.5	□178	139	91
		F3S45N∗∗∗-MR15T◇◇TB◆			Yes	38.5	549.5	□178	139	91
	2.2 kW	F3S45N∗∗∗-MR22T◇◇TN	5, 7.5, 10, 12.5, 15, 20, 25, 30	2	No	42	570	□192	149	140
		F3S45N∗∗∗-MR22T◇◇TB◆			Yes	45	599	□192	149	140

Note: A reduction ratio will be indicated as ∗∗∗ in the nomenclature. In addition, a supply voltage/certification code will be indicated as ◇◇, and brake specification will be indicated as ◆.

Note: When the reduction ratio is 7.5, “7” will be indicated as ∗∗∗ in the nomenclature, and when the reduction ratio is 12.5, “12” will be indicated as ∗∗∗ in the nomenclature.

Note: Please refer to page 452 for the performance table.

F3F Type Concentric Right Angle Shaft | Shaft Diameter **18** | **Flange** Mounting

The values in parentheses ( ) are the indications for gearmotors with brake.

<Figure 1>

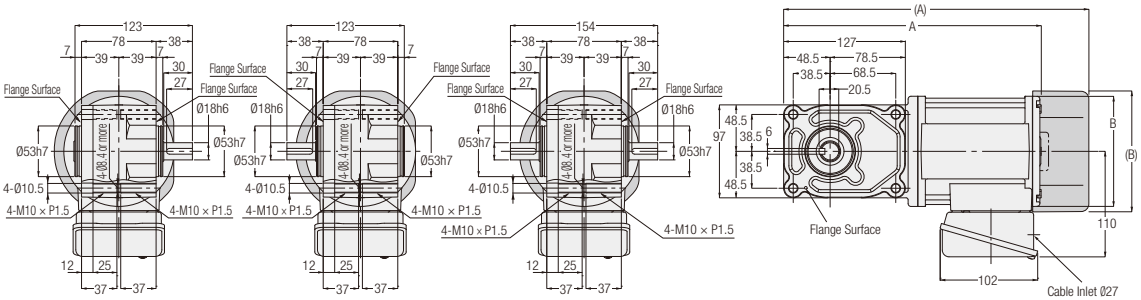

L Shaft R Shaft T Shaft

Number of Phases	Power	Part Number	Reduction Ratio	Figure Number	Brake	Approx. Weight (kg)	A	B
3-Phase	0.1 kW	F3F18#∗∗∗-MM01T◇◇TN	5, 7.5, 10, 12.5, 15, 20, 25, 30, 40, 50, 60	1	No	6.5	254	Ø115
	0.1 kW	F3F18#∗∗∗-MM01T◇◇TB◆	5, 7.5, 10, 12.5, 15, 20, 25, 30, 40, 50, 60	1	Yes	8	293.9	□126
	0.2 kW	F3F18#∗∗∗-MM02T◇◇TN	5, 7.5, 10, 12.5, 15, 20, 25, 30	1	No	7.5	269	Ø115
	0.2 kW	F3F18#∗∗∗-MM02T◇◇TB◆	5, 7.5, 10, 12.5, 15, 20, 25, 30	1	Yes	9	319.5	□126

Note: A shaft arrangement (L, R, T) will be indicated as # in the nomenclature. In addition, a reduction ratio will be indicated as ∗∗∗, a supply voltage/certification code will be indicated as ◇◇, and a brake specification will be indicated as ◆.

Note: When the reduction ratio is 7.5, “7” will be indicated as ∗∗∗ in the nomenclature, and when the reduction ratio is 12.5, “12” will be indicated as ∗∗∗ in the nomenclature.

Note: Please refer to page 457 for the performance table.

F3F Type Concentric Right Angle Shaft | Shaft Diameter 22 | **Flange** Mounting

The values in parentheses ( ) are the indications for gearmotors with brake.

<Figure 1>

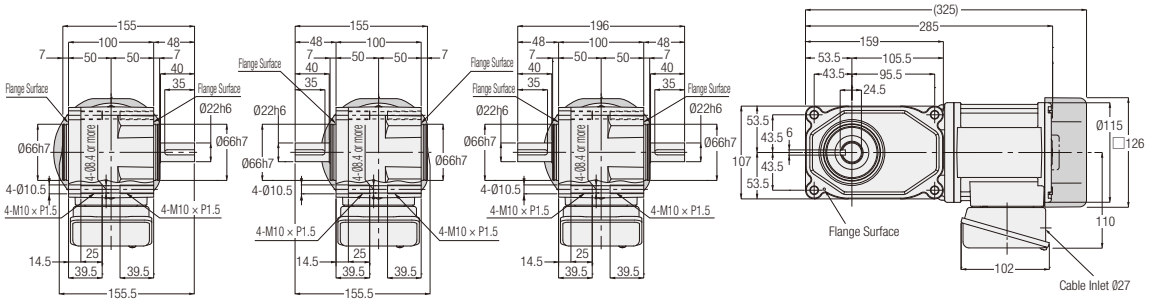

<Figure 2>

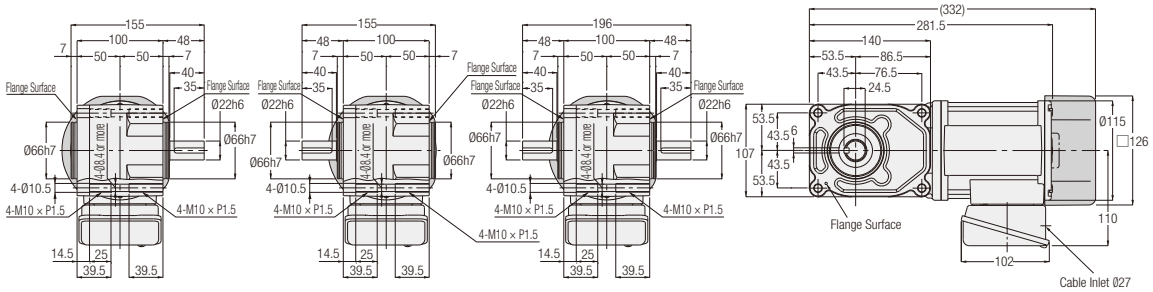

<Figure 3>

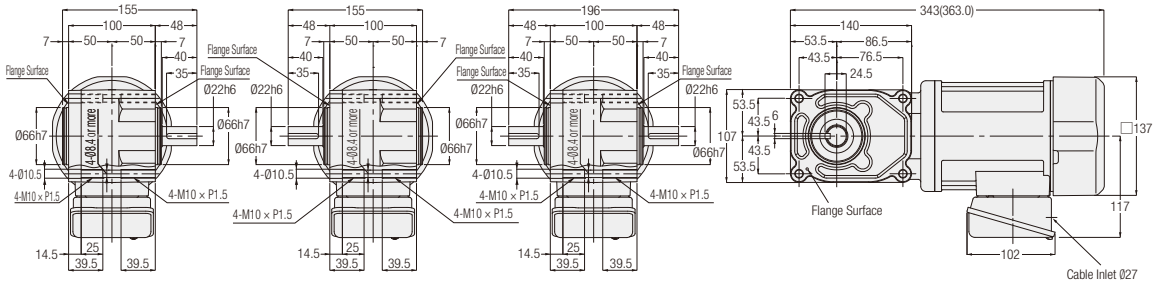

L Shaft **R Shaft** **T Shaft**

Number of Phases	Power	Part Number	Reduction Ratio	Figure Number	Brake	Approx. Weight (kg)
3-Phase	0.1 kW	F3F22#∗∗∗-MM01T◇◇TN	80, 100, 120, 160, 200, 240	1	No	8.5
		F3F22#∗∗∗-MM01T◇◇TB◆			Yes	10
	0.2 kW	F3F22#∗∗∗-MM02T◇◇TN	5, 7.5, 10, 12.5, 15, 20, 25, 30, 40, 50, 60	2	No	9.5
		F3F22#∗∗∗-MM02T◇◇TB◆			Yes	11
	0.4 kW	F3F22#∗∗∗-MM04T◇◇TN	5, 7.5, 10, 12.5, 15, 20, 25, 30	3	No	11.5
		F3F22#∗∗∗-MM04T◇◇TB◆			Yes	13

Note: A shaft arrangement (L, R, T) will be indicated as # in the nomenclature. In addition, a reduction ratio will be indicated as ∗∗∗, a supply voltage/certification code will be indicated as ◇◇, and a brake specification will be indicated as ◆.

Note: When the reduction ratio is 7.5, “7” will be indicated as ∗∗∗ in the nomenclature, and when the reduction ratio is 12.5, “12” will be indicated as ∗∗∗ in the nomenclature.

Note: Please refer to page 457 for the performance table.

F3F Type Concentric Right Angle Shaft | Shaft Diameter **28** | **Flange** Mounting

The values in parentheses ( ) are the indications for gearmotors with brake.

<Figure 1>

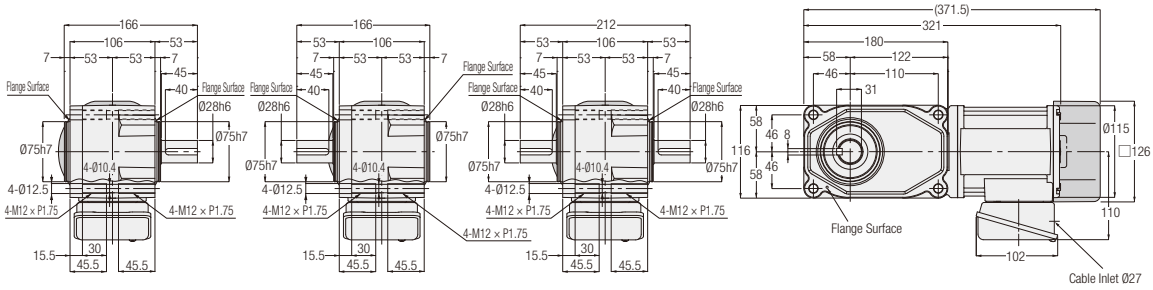

<Figure 2>

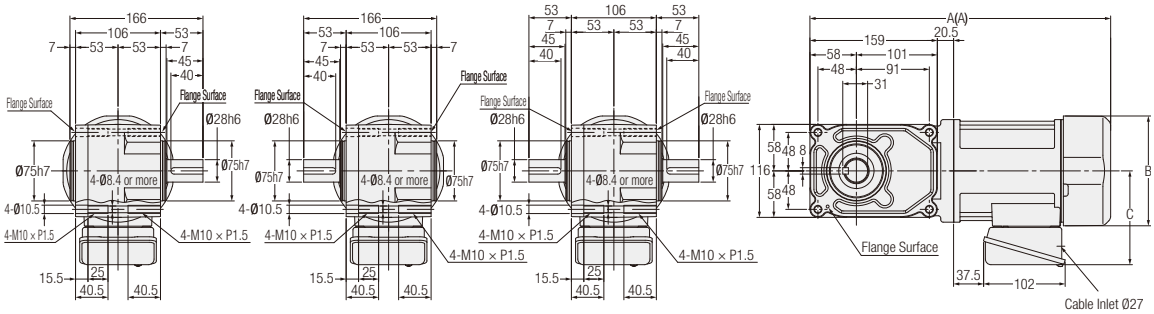

<Figure 3>

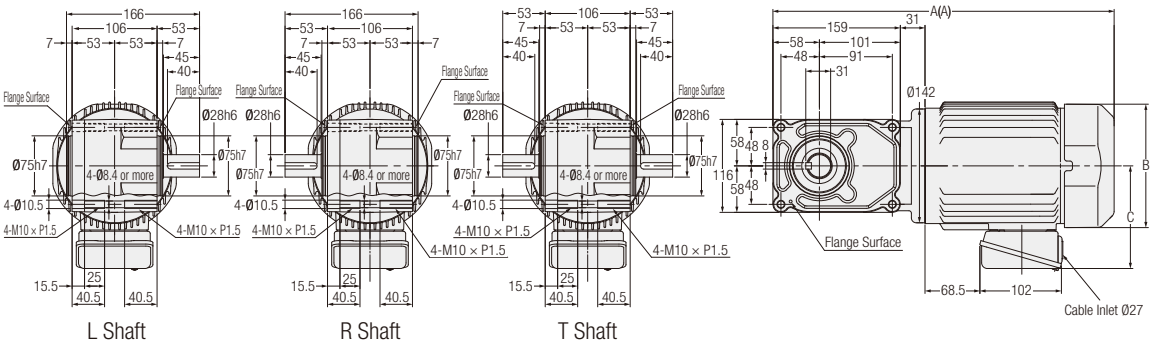

Number of Phases	Power	Part Number	Reduction Ratio	Figure Number	Brake	Approx. Weight (kg)	A	B	C
3-Phase	0.2 kW	F3F28#∗∗∗-MM02T◇◇TN	80, 100, 120, 160, 200, 240	1	No	11	-	-	-
		F3F28#∗∗∗-MM02T◇◇TB◆			Yes	12.5	-	-	-
	0.4 kW	F3F28#∗∗∗-MM04T◇◇TN	5, 7.5, 10, 12.5, 15, 20, 25, 30, 40, 50, 60	2	No	13	355.5	□137	117
		F3F28#∗∗∗-MM04T◇◇TB◆			Yes	14.5	375.5	□137	117
	0.75 kW	F3F28#∗∗∗-MR08T◇◇TN	5, 7.5, 10, 12.5, 15, 20, 25, 30	3	No	20	407	□154	128
		F3F28#∗∗∗-MR08T◇◇TB◆			Yes	22	426	□154	128

Note: A shaft arrangement (L, R, T) will be indicated as # in the nomenclature. In addition, a reduction ratio will be indicated as ∗∗∗, a supply voltage/certification code will be indicated as ◇◇, and a brake specification will be indicated as ◆.

Note: When the reduction ratio is 7.5, “7” will be indicated as ∗∗∗ in the nomenclature, and when the reduction ratio is 12.5, “12” will be indicated as ∗∗∗ in the nomenclature.

Note: Please refer to page 457 for the performance table.

F3F Type Concentric Right Angle Shaft | Shaft Diameter 32 | **Flange** Mounting

The values in parentheses ( ) are the indications for gearmotors with brake.

<Figure 1>

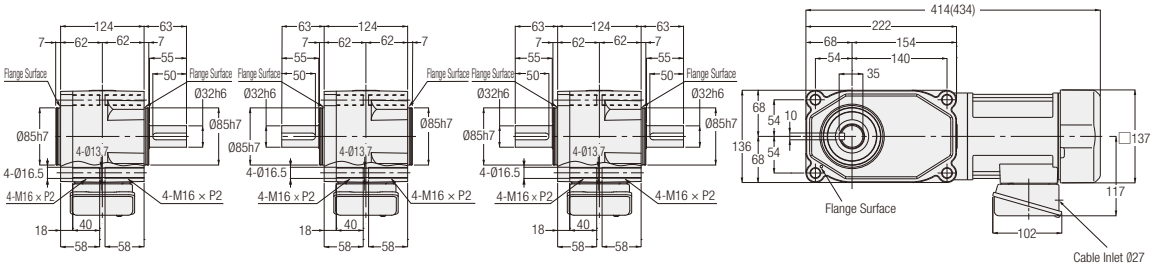

<Figure 2>

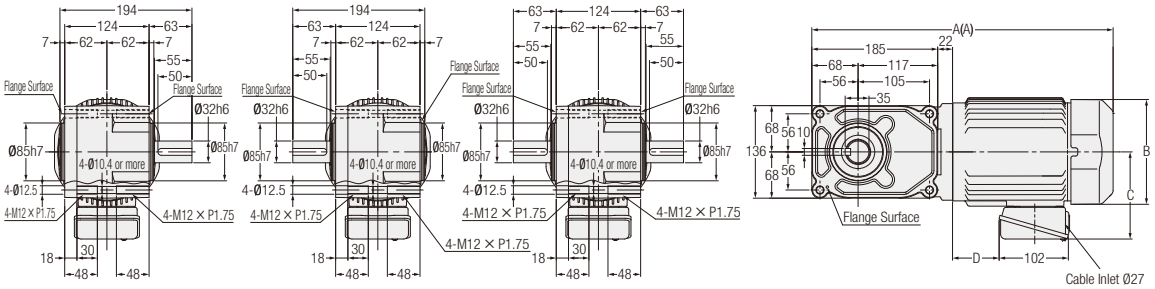

L Shaft R Shaft T Shaft

Note: Gearmotors with a motor power of 0.75kW does not include the hanging plate.

Number of Phases	Power	Part Number	Reduction Ratio	Figure Number	Brake	Approx. Weight (kg)	A	B	C	D
3-Phase	0.4 kW	F3F32#∗∗∗-MM04T◇◇TN	80, 100, 120, 160, 200, 240	1	No	17	-	-	-	-
		F3F32#∗∗∗-MM04T◇◇TB◆	80, 100, 120, 160, 200, 240	1	Yes	19	-	-	-	-
	0.75 kW	F3F32#∗∗∗-MR08T◇◇TN	5, 7.5, 10, 12.5, 15, 20, 25, 30, 40, 50, 60	2	No	22.5	424	□154	128	68.5
		F3F32#∗∗∗-MR08T◇◇TB◆	5, 7.5, 10, 12.5, 15, 20, 25, 30, 40, 50, 60	2	Yes	24.5	443	□154	128	68.5
	1.5 kW	F3F32#∗∗∗-MR15T◇◇TN	5, 7.5, 10, 12.5, 15, 20, 25, 30	2	No	29.5	475	□178	139	91
		F3F32#∗∗∗-MR15T◇◇TB◆	5, 7.5, 10, 12.5, 15, 20, 25, 30	2	Yes	32.5	504	□178	139	91

Note: A shaft arrangement (L, R, T) will be indicated as # in the nomenclature. In addition, a reduction ratio will be indicated as ∗∗∗, a supply voltage/certification code will be indicated as ◇◇, and a brake specification will be indicated as ◆.

Note: When the reduction ratio is 7.5, “7” will be indicated as ∗∗∗ in the nomenclature, and when the reduction ratio is 12.5, “12” will be indicated as ∗∗∗ in the nomenclature.

Note: Please refer to page 458 for the performance table.

F3F Type Concentric Right Angle Shaft | Shaft Diameter **40** | **Flange** Mounting

The values in parentheses ( ) are the indications for gearmotors with brake.

<Figure 1>

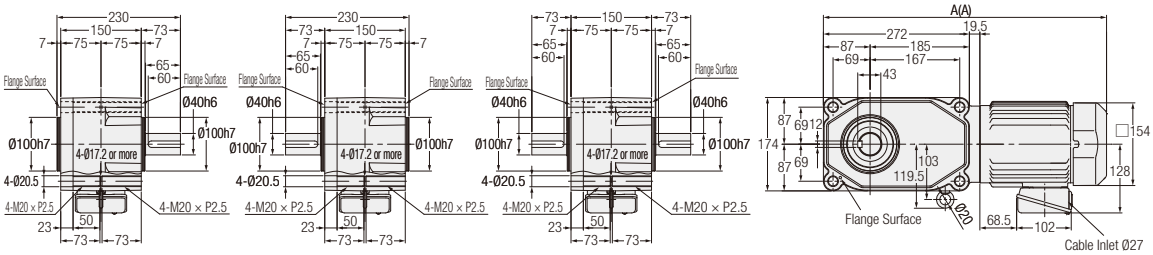

<Figure 2>

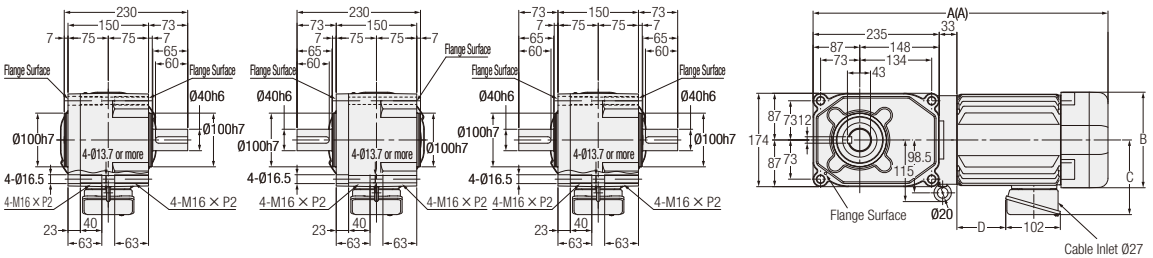

L Shaft R Shaft T Shaft

Number of Phases	Power	Part Number	Reduction Ratio	Figure Number	Brake	Approx. Weight (kg)	A	B	C	D
3-Phase	0.75 kW	F3F40#∗∗∗-MR08T◇◇TN	80, 100, 120, 160, 200, 240	1	No	30.5	508.5	-	-	-
		F3F40#∗∗∗-MR08T◇◇TB◆			Yes	32.5	527.5	-	-	-
	1.5 kW	F3F40#∗∗∗-MR15T◇◇TN	5, 7.5, 10, 12.5, 15, 20, 25, 30, 40, 50, 60	2	No	38.5	520.5	□178	139	91
		F3F40#∗∗∗-MR15T◇◇TB◆			Yes	41.5	549.5	□178	139	91
	2.2 kW	F3F40#∗∗∗-MR22T◇◇TN	5, 7.5, 10, 12.5, 15, 20, 25, 30	2	No	45	570	□192	149	140
		F3F40#∗∗∗-MR22T◇◇TB◆			Yes	48	599	□192	149	140

Note: A shaft arrangement (L, R, T) will be indicated as # in the nomenclature. In addition, a reduction ratio will be indicated as ∗∗∗, a supply voltage/certification code will be indicated as ◇◇, and a brake specification will be indicated as ◆.

Note: When the reduction ratio is 7.5, “7” will be indicated as ∗∗∗ in the nomenclature, and when the reduction ratio is 12.5, “12” will be indicated as ∗∗∗ in the nomenclature.

Note: Please refer to page 458 for the performance table.

2. IP65 Gearmotors
IP65 Gearmotors with Brake

2-1. Motor Characteristics Table

F2 Type 3-Phase Standard Voltage <Concentric Right Angle Hollow Bore/F2S>

Series	Power (W)	Voltage (V)	Frequency (Hz)	Frame Size	Rated Current (A)	Rated Speed (r/min)	Startup Current (A)
MINI	15	200/200/220	50/60/60	12	0.14/0.13/0.13	1350/1550/1600	0.30/0.28/0.31
	25	200/200/220	50/60/60	12	0.21/0.19/0.19	1350/1550/1600	0.44/0.42/0.46
	40	200/200/220	50/60/60	12	0.29/0.27/0.27	1350/1550/1600	0.67/0.62/0.68
				15	0.27/0.26/0.26	1350/1550/1550	0.73/0.69/0.76
	60	200/200/220	50/60/60	15	0.40/0.36/0.36	1350/1550/1600	1.04/0.97/1.07
	90	200/200/220	50/60/60	15	0.51/0.48/0.48	1350/1550/1550	1.42/1.36/1.49

The rated current in the motor characteristics table is the current data for the motor operating without a gearbox.
With regard to gearmotors with a brake, it is necessary to consider the current value flowing through the brake as needed.
For more details, please contact your nearest Sales Office or the CS Center.

F2 Type 1-Phase Standard Voltage <Concentric Right Angle Hollow Bore/F2S>

Series	Power (W)	Voltage (V)	Frequency (Hz)	Frame Size	Rated Current (A)	Rated Speed (r/min)	Startup Current (A)	Capacitor (μF)
MINI	15	100/100	50/60	12	0.39/0.35	1350/1650	0.72/0.67	5
	25	100/100	50/60	12	0.48/0.48	1350/1600	0.86/0.80	7
	40	100/100	50/60	15	0.61/0.66	1350/1650	1.43/1.36	10

The rated current in the motor characteristics table is the current data for the motor operating without a gearbox.
With regard to gearmotors with a brake, it is necessary to consider the current value flowing through the brake as needed.
For more details, please contact your nearest Sales Office or the CS Center.

2-1. Motor Characteristics Table

F3 Type 3-Phase Standard Voltage/High Voltage (400 V Class)/Special Voltage <Concentric Right Angle Hollow Bore/F3S>

Series	Power	Power Supply/ Certification Codes	Voltage (V)	Frequency (Hz)	Rated Current (A)	Startup Current (A)	Rated Speed (r/min)
MID	0.1 kW	NN	200/200/220	50/60/60	0.61/0.54/0.54	2.39/2.27/2.52	1410/1690/1710
		WN	380/400/400/440	50/50/60/60	0.31/0.31/0.28/0.28	1.12/1.18/1.12/1.22	1400/1410/1690/1720
		KN	220/380	60/60	0.52/0.30	1.90/1.10	1680/1680
		CN	220/230/380	50/50/50	0.55/0.54/0.31	1.94/2.03/1.12	1400/1410/1400
		DN	220/220/380/380	50/60/50/60	0.55/0.52/0.31/0.30	1.94/1.90/1.12/1.10	1400/1680/1400/1680
		EN	415/440/480	50/50/60	0.30/0.29/0.26	1.06/1.12/1.17	1390/1420/1720
		AN	208/230/460/400	60/60/60/50	0.54/0.57/0.29/0.31	2.35/2.62/1.26/1.21	1690/1730/1730/1410
		MA	575	60	0.20	0.87	1700
	0.2 kW IE2	NN	200/200/220	50/60/60	1.1/1.0/1.0	4.70/4.35/4.85	1400/1680/1700
		WN	380/400/400/440	50/50/60/60	0.56/0.56/0.50/0.50	2.29/2.38/2.29/2.48	1390/1400/1680/1710
		KN	220/380	60/60	0.93/0.52	3.70/2.20	1680/1680
		CN	220/230/380	50/50/50	0.99/0.98/0.56	3.97/4.15/2.29	1400/1410/1390
		DN	220/220/380/380	50/60/50/60	0.99/0.93/0.56/0.52	3.97/3.70/2.29/2.20	1400/1680/1390/1680
		EN	415/440/480	50/50/60	0.50/0.50/0.45	1.75/1.86/2.00	1370/1400/1700
		AN	208/230/460/400	60/60/60/50	1.0/1.0/0.50/0.56	4.78/5.16/2.56/2.44	1680/1720/1720/1400
		MA	575	60	0.40	1.78	1710
	0.4 kW IE2	NN	200/200/220	50/60/60	2.1/1.8/1.8	9.50/8.60/9.60	1400/1680/1700
		WN	380/400/400/440	50/50/60/60	1.0/1.0/0.9/0.9	4.35/4.65/4.30/4.75	1390/1400/1680/1710
		KN	220/380	60/60	1.7/1.0	7.10/4.09	1670/1670
		CN	220/230/380	50/50/50	1.8/1.8/1.0	7.63/7.88/4.43	1390/1400/1390
		DN	220/220/380/380	50/60/50/60	1.8/1.7/1.0/1.0	7.63/7.10/4.43/4.09	1390/1670/1390/1670
		EN	415/440/480	50/50/60	0.96/0.95/0.82	3.96/4.20/4.20	1390/1410/1680
		AN	208/230/460/400	60/60/60/50	1.8/1.8/0.9/1.0	8.90/9.76/4.73/4.78	1680/1720/1720/1400
		MA	575	60	0.68	3.51	1700
	0.75 kW IE3	NN	200/200/220	50/60/60	3.5/3.2/3.1	21.8/19.0/21.1	1450/1740/1750
		WN	380/400/400/440	50/50/60/60	1.73/1.72/1.58/1.54	10.2/10.8/9.8/10.7	1440/1450/1740/1750
		KN	220/380	60/60	2.9/1.7	16.9/9.8	1740/1740
		CN	220/230/380	50/50/50	3.0/3.0/1.7	17.8/18.7/10.3	1450/1450/1440
		DN	220/220/380/380	50/60/50/60	3.1/2.9/1.8/1.7	19.3/16.9/11.2/9.8	1450/1740/1450/1740
		EN	415/440/480	50/50/60	1.54/1.52/1.36	8.6/9.3/9.0	1440/1450/1750
		UN	230/460/400	60/60/50	3.1/1.5/1.7	22.3/11.2/10.8	1760/1760/1450
		MA	575	60	1.16	7.2	1750
	1.5 kW IE3	NN	200/200/220	50/60/60	6.7/6.1/5.9	45.6/40.3/45.1	1450/1740/1760
		WN	380/400/400/440	50/50/60/60	3.4/3.4/3.1/3.0	21.9/23.2/20.4/22.8	1450/1450/1750/1760
		KN	220/380	60/60	5.9/3.4	45.1/25.8	1760/1760
		CN	220/230/380	50/50/50	5.9/5.9/3.4	38.5/40.4/22.1	1450/1450/1450
		EN	415/440/480	50/50/60	3.1/3.1/2.8	20.8/22.2/21.2	1450/1460/1760
		UN	230/460/400	60/60/50	5.9/2.9/3.3	44.9/22.6/23.2	1760/1760/1450
		MA	575	60	2.2	17.0	1760
	2.2 kW IE3	NN	200/200/220	50/60/60	9.3/8.6/8.2	70.3/56.9/63.7	1470/1760/1770
		WN	380/400/400/440	50/50/60/60	4.5/4.4/4.2/3.9	30.0/32.0/25.0/28.0	1440/1450/1740/1750
		KN	220/380	60/60	8.3/4.8	65.0/38.0	1770/1770
		CN	220/230/380	50/50/50	7.9/7.7/4.5	52.0/54.3/30.0	1460/1470/1440
		EN	415/440/480	50/50/60	4.3/4.3/3.8	33.1/35.5/29.8	1460/1470/1770
		UN	230/460/400	60/60/50	7.9/4.0/4.5	65.2/34.8/36.3	1770/1770/1470
		MA	575	60	3.3	24.4	1760

The rated current in the motor characteristics table is the current data for the motor operating without a gearbox.
With regard to gearmotors with a brake, it is necessary to consider the current value flowing through the brake as needed.
For more details, please contact your nearest Sales Office or the CS Center.

2-2. Performance Table

F2 Type IP65 Gearmotors/IP65 Gearmotors with Brake <Concentric Right Angle Hollow Bore/F2S>

[Notes]

- The values in parentheses ( ) in the drawings are the indications for gearmotors with brake.
- The output shaft speed is the value determined with the motor's synch-speed and the reduction ratio.
- Allowable output shaft O.H.L. is the value at 10 mm from the end of the output shaft.
- The "*" mark indicates a limited torque type. Please make sure to check the allowable output shaft torque in the performance table.
- The key for the output shaft is not included.
- In the performance table, the reduction ratio in ▭ indicates that when the connection is made as shown on page 546 (CW), the direction of rotation is clockwise in the case of a three-Phase motor or counterclockwise in the case of a single-Phase motor when viewed from the side indicated by arrow Ⓐ shown in the figure on the right. (Refer to the figure on the right)

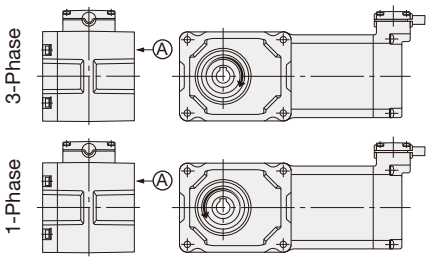

Series	Motor Power	Frame Size	Reduction Ratio	Actual Reduction Ratio	Output Shaft Speed r/min 50 Hz	Output Shaft Speed r/min 60 Hz	Allowable Output Shaft Torque N·m	Allowable Output Shaft O.H.L. N	Allowable Output Shaft Thrust Load N	Drawings
MINI	15 W	12	1/10	4/41	150	180	0.69	343	88	P.487
			1/15	8/123	100	120	0.98	441	108	
			1/20	2/41	75	90	1.27	539	137	
			1/25	8/205	60	72	1.67	588	147	
			1/30	4/123	50	60	1.96	686	177	
			1/40	1/41	37.5	45	2.65	784	195	
			1/50	4/205	30	36	3.33	882	226	
			1/60	20/1189	25	30	3.92	882	226	
			1/80	1/82	18.8	22.5	5.00	980	245	
			1/100	2/205	15	18	6.27	980	245	
			1/120	1/123	12.5	15	7.45	1080	275	
			1/160	1/164	9.4	11.2	9.80	1080	275	
			1/200	1/205	7.5	9	12.7	1080	275	
			1/240	5/1189	6.3	7.5	14.7	1080	275	
	25 W	12	1/10	4/41	150	180	1.08	343	88	P.487
			1/15	8/123	100	120	1.67	441	108	
			1/20	2/41	75	90	2.25	539	137	
			1/25	8/205	60	72	2.74	588	147	
			1/30	4/123	50	60	3.33	686	177	
			1/40	1/41	37.5	45	4.41	784	196	
			1/50	4/205	30	36	5.49	882	226	
			1/60	20/1189	25	30	6.66	882	226	
			1/80	1/82	18.8	22.5	8.43	980	245	
			1/100	2/205	15	18	10.8	980	245	
			1/120	1/123	12.5	15	12.7	1080	275	
			1/160	1/164	9.4	11.2	16.7	1080	275	
			1/200	1/205	7.5	9	20.6	1080	275	
			1/240	5/1189	6.3	7.5	25.5	1080	275	
	40 W	12 (Note 1)	1/10	4/41	150	180	1.76	343	88	P.487
			1/15	8/123	100	120	2.65	441	108	
			1/20	2/41	75	90	3.53	539	137	
			1/25	8/205	60	72	4.41	588	147	
			1/30	4/123	50	60	5.29	686	177	
			1/40	1/41	37.5	45	7.06	784	196	
			1/50	4/205	30	36	8.82	882	226	
			1/60	20/1189	25	30	10.8	882	226	
			1/80	1/82	18.8	22.5	13.7	980	245	
			1/100	2/205	15	18	16.7	980	245	
			1/120	1/123	12.5	15	20.6	1080	275	
		15	1/160	1/164	9.4	11.2	26.5	1370	343	P.488
			1/200	1/205	7.5	9	33.3	1370	343	
			1/240	1/246	6.3	7.5	40.2	1370	343	

2-2. Performance Table

Series	Motor Power	Frame Size	Reduction Ratio	Actual Reduction Ratio	Output Shaft Speed r/min		Allowable Output Shaft Torque	Allowable Output Shaft O.H.L.	Allowable Output Shaft Thrust Load	Drawings
					50 Hz	60 Hz	N·m	N	N	
MINI	60 W	15	1/10	4/41	150	180	2.74	343	108	P.488
			1/15	8/123	100	120	4.12	441	147	
			1/20	2/41	75	90	5.49	539	186	
			1/25	8/205	60	72	6.96	588	226	
			1/30	4/123	50	60	8.33	686	245	
			1/40	1/41	37.5	45	10.8	784	275	
			1/50	4/205	30	36	13.7	882	294	
			1/60	2/123	25	30	16.7	882	294	
			1/80	1/82	18.8	22.5	20.6	1270	324	
			1/100	2/205	15	18	26.5	1270	324	
			1/120	1/123	12.5	15	31.4	1370	343	
			1/160	1/164	9.4	11.2	42.1	1370	343	
			1/200	1/205	7.5	9	52.9	1370	343	
			* 1/240	1/246	6.3	7.5	53.9	1370	343	
	90 W	15	1/10	4/41	150	180	4.12	441	108	P.488
			1/15	8/123	100	120	6.17	588	147	
			1/20	2/41	75	90	8.33	735	186	
			1/25	8/205	60	72	10.8	882	226	
			1/30	4/123	50	60	12.7	980	245	
			1/40	1/41	37.5	45	16.7	1080	275	
			1/50	4/205	30	36	20.6	1180	294	
			1/60	2/123	25	30	24.5	1180	294	
			1/80	1/82	18.8	22.5	31.4	1270	324	
			1/100	2/205	15	18	39.2	1270	324	
			1/120	1/123	12.5	15	47.0	1370	343	
			* 1/160	1/164	9.4	11.2	53.9	1370	343	
			* 1/200	1/205	7.5	9	53.9	1370	343	
			* 1/240	1/246	6.3	7.5	53.9	1370	343	

Note 1: The frame size for Single-phase types will be 15.

F3 Type IP65 Gearmotors/IP65 Gearmotors with Brake <Concentric Right Angle Hollow Bore/F3S>

[Notes]

- The values in parentheses ( ) in the drawings are the indications for gearmotors with brake.
- The output shaft speed is the value determined with the motor's synch-speed and the reduction ratio.
- The key for the output shaft is not included.
- In the performance table, ▭ indicates that the shaft rotates clockwise when viewed from the flange surface side on the right when the connection is made as shown on page 547 (CW). (Refer to the figure on the right)
- Allowable output shaft O.H.L. is the value at 20 mm from the end of the output shaft.
- The "*" mark indicates a limited torque type. Please make sure to check the allowable output shaft torque in the performance table.

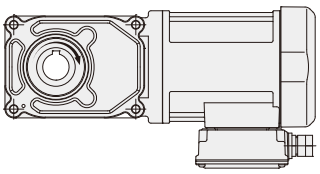

Series	Motor Power	Frame Size	Reduction Ratio	Actual Reduction Ratio	Output Shaft Speed r/min 50 Hz	Output Shaft Speed r/min 60 Hz	Allowable Output Shaft Torque N·m 50 Hz	Allowable Output Shaft Torque N·m 60 Hz	Allowable Output Shaft O.H.L. N	Allowable Output Shaft Thrust Load N	Drawings
MID	3-Phase 0.1 kW	20	1/5	1/5	300	360	2.5	2.2	980	244	P.489
			1/7.5	2/15	200	240	3.8	3.2	1080	270	
			1/10	1/10	150	180	5.2	4.3	1180	294	
			1/12.5	2/25	120	144	6.5	5.4	1270	316	
			1/15	1/15	100	120	7.7	6.5	1320	333	
			1/20	1/20	75	90	11	8.6	1470	373	
			1/25	1/25	60	72	13	11	1570	392	
			1/30	2/59	50	60	16	13	1670	422	
			1/40	1/40	37.5	45	21	18	1810	451	
			1/50	1/50	30	36	25	22	1860	471	
			1/60	1/59	25	30	31	25	1860	471	
		25	1/80	1/80	18.8	22.5	39	32	2550	637	P.490
			1/100	19/1880	15	18	49	41	2550	637	
			1/120	1/120	12.5	15	59	49	2550	637	
			1/160	1/160	9.4	11.3	78	66	2550	637	
			1/200	1/200	7.5	9	98	81	2550	637	
			* 1/240	1/240	6.3	7.5	101	98	2550	637	
	3-Phase 0.2 kW	20 (Small Frame Model)	1/5	1/5	300	360	5.5	4.6	980	244	P.489
			1/7.5	2/15	200	240	8.3	7	1080	270	
			1/10	1/10	150	180	11	9.2	1180	294	
			1/12.5	2/25	120	144	14	12	1270	316	
			1/15	1/15	100	120	17	14	1320	333	
			1/20	1/20	75	90	23	19	1470	373	
			1/25	1/25	60	72	27	24	1570	392	
			1/30	2/59	50	60	33	27	1670	422	
		25	1/5	1/5	300	360	5.5	4.6	1230	307	P.490
			1/7.5	2/15	200	240	8.3	7	1370	342	
			1/10	1/10	150	180	11	9.2	1520	380	
			1/12.5	19/235	120	144	14	12	1620	405	
			1/15	1/15	100	120	17	14	1720	429	
			1/20	1/20	75	90	23	19	1860	466	
			1/25	1/25	60	72	27	24	2010	502	
			1/30	1/30	50	60	33	27	2110	527	
			1/40	1/40	37.5	45	44	37	2300	576	
			1/50	1/50	30	36	55	46	2450	613	
			1/60	1/60	25	30	67	55	2550	637	
		30	1/80	1/80	18.8	22.5	84	71	3090	775	P.491
			1/100	19/1880	15	18	105	87	3140	785	
			1/120	1/120	12.5	15	126	105	3140	785	
			1/160	1/160	9.4	11.3	169	140	3140	785	
			* 1/200	1/200	7.5	9	184	175	3140	785	
			* 1/240	1/240	6.3	7.5	184	184	3140	785	

2-2. Performance Table

Series	Motor Power	Frame Size	Reduction Ratio	Actual Reduction Ratio	Output Shaft Speed r/min 50 Hz	Output Shaft Speed r/min 60 Hz	Allowable Output Shaft Torque N·m 50 Hz	Allowable Output Shaft Torque N·m 60 Hz	Allowable Output Shaft O.H.L. N	Allowable Output Shaft Thrust Load N	Drawings
MID	3-Phase 0.4 kW	25 (Small Frame Model)	1/5	1/5	300	360	11	9.2	1230	307	P.490
			1/7.5	2/15	200	240	17	14	1370	342	
			1/10	1/10	150	180	23	19	1520	380	
			1/12.5	19/235	120	144	27	24	1620	405	
			1/15	1/15	100	120	33	27	1720	429	
			1/20	1/20	75	90	44	37	1860	466	
			1/25	1/25	60	72	55	46	2010	502	
			1/30	1/30	50	60	67	55	2110	527	
		30	1/5	1/5	300	360	11	9.2	1520	375	P.491
			1/7.5	2/15	200	240	17	14	1760	438	
			1/10	1/10	150	180	23	19	1910	475	
			1/12.5	19/235	120	144	27	24	2060	506	
			1/15	1/15	100	120	33	27	2160	539	
			1/20	1/20	75	90	44	37	2400	600	
			1/25	1/25	60	72	55	46	2550	637	
			1/30	1/30	50	60	67	55	2650	662	
			1/40	1/40	37.5	45	88	74	2840	711	
			1/50	1/50	30	36	111	92	2990	747	
			1/60	1/60	25	30	133	111	3090	767	
		35	1/80	1/80	18.8	22.5	169	140	3480	873	P.492
			1/100	19/1880	15	18	211	175	3530	883	
			1/120	1/120	12.5	15	253	211	3530	883	
			* 1/160	1/160	9.4	11.3	270	270	3630	912	
			* 1/200	1/200	7.5	9	270	270	3630	912	
			* 1/240	1/240	6.3	7.5	270	270	3630	912	
	3-Phase 0.75 kW	30 (Small Frame Model)	1/5	1/5	300	360	21	18	1520	375	P.491
			1/7.5	2/15	200	240	31	25	1760	438	
			1/10	1/10	150	180	41	34	1910	475	
			1/12.5	19/235	120	144	52	43	2060	506	
			1/15	1/15	100	120	63	52	2160	539	
			1/20	1/20	75	90	83	70	2400	600	
			1/25	1/25	60	72	104	86	2550	637	
			1/30	1/30	50	60	124	104	2650	662	
		35	1/5	1/5	300	360	21	18	1960	500	P.492
			1/7.5	2/15	200	240	31	25	2250	567	
			1/10	1/10	150	180	41	34	2450	613	
			1/12.5	19/235	120	144	52	43	2600	669	
			1/15	1/15	100	120	63	52	2740	686	
			1/20	1/20	75	90	83	70	2990	747	
			1/25	1/25	60	72	104	86	3190	796	
			1/30	1/30	50	60	124	104	3280	821	
			1/40	1/40	37.5	45	166	138	3480	870	
			1/50	1/50	30	36	208	173	3480	870	
			1/60	1/60	25	30	249	208	3480	870	
		45	1/80	1/80	18.8	22.5	316	263	4750	1177	P.493
			1/100	19/1880	15	18	395	328	4750	1177	
			1/120	1/120	12.5	15	473	395	4750	1177	
			* 1/160	1/160	9.4	11.3	554	526	5190	1275	
			* 1/200	1/200	7.5	9	554	554	5190	1275	
			* 1/240	1/240	6.3	7.5	554	554	5190	1275	

Series	Motor Power	Frame Size	Reduction Ratio	Actual Reduction Ratio	Output Shaft Speed r/min 50 Hz	Output Shaft Speed r/min 60 Hz	Allowable Output Shaft Torque N·m 50 Hz	Allowable Output Shaft Torque N·m 60 Hz	Allowable Output Shaft O.H.L. N	Allowable Output Shaft Thrust Load N	Drawings
MID	3-Phase 1.5 kW	35 (Small Frame Model)	1/5	1/5	300	360	41	34	1960	500	P.492
			1/7.5	2/15	200	240	63	52	2250	567	
			1/10	1/10	150	180	83	70	2450	613	
			1/12.5	19/235	120	144	104	86	2600	669	
			1/15	1/15	100	120	124	104	2740	686	
			1/20	1/20	75	90	166	138	2990	747	
			1/25	1/25	60	72	208	173	3190	796	
			1/30	1/30	50	60	249	208	3280	821	
		45	1/5	1/5	300	360	41	34	2940	800	P.493
			1/7.5	2/15	200	240	63	52	3330	900	
			1/10	1/10	150	180	83	70	3630	967	
			1/12.5	19/235	120	144	104	86	3920	1040	
			1/15	1/15	100	120	124	104	4070	1067	
			1/20	1/20	75	90	166	138	4460	1067	
			1/25	1/25	60	72	208	173	4700	1067	
			1/30	1/30	50	60	249	208	4750	1067	
			1/40	1/40	37.5	45	332	276	4750	1067	
			1/50	1/50	30	36	416	345	4750	1067	
			1/60	1/60	25	30	498	416	4750	1067	
	3-Phase 2.2 kW	45	1/5	1/5	300	360	61	51	3140	800	P.493
			1/7.5	2/15	200	240	91	76	3530	900	
			1/10	1/10	150	180	122	102	3920	967	
			1/12.5	19/235	120	144	152	126	4120	1040	
			1/15	1/15	100	120	182	152	4410	1067	
			1/20	1/20	75	90	244	203	4750	1067	
			1/25	1/25	60	72	305	254	4750	1067	
			1/30	1/30	50	60	366	305	4750	1067	

• Please read the notes on page 484.

2-3. Drawings

F2S Type Concentric Right Angle Hollow Bore | Shaft Diameter 12 | **Flange** Mounting

The values in parentheses ( ) are the indications for gearmotors with brake.

<Figure 1>

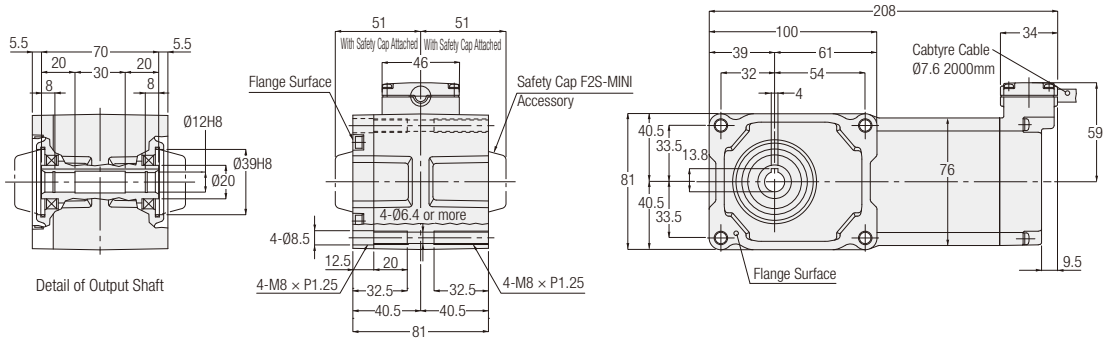

<Figure 2>

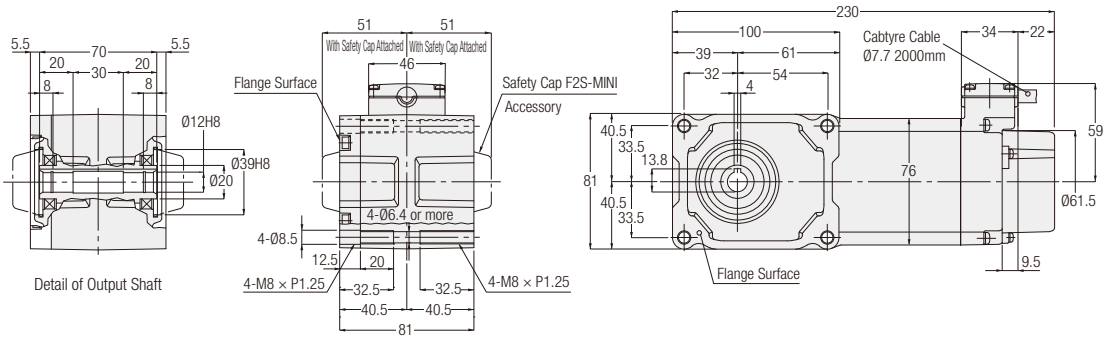

Number of Phases	Power	Part Number	Reduction Ratio	Figure Number	Brake	Approx. Weight (kg)
3-Phase	15 W	F2SW-12-∗∗∗-T15	10, 15, 20, 25, 30, 40, 50, 60, 80, 100, 120, 160, 200, 240	1	No	3.5
		F2SV-12-∗∗∗-T15		2	Yes	4
	25 W	F2SW-12-∗∗∗-T25	10, 15, 20, 25, 30, 40, 50, 60, 80, 100, 120, 160, 200, 240	1	No	3.5
		F2SV-12-∗∗∗-T25		2	Yes	4
	40 W	F2SW-12-∗∗∗-T40	10, 15, 20, 25, 30, 40, 50, 60, 80, 100, 120	1	No	3.5
		F2SV-12-∗∗∗-T40		2	Yes	4
1-Phase	15 W	F2SW-12-∗∗∗-S15	10, 15, 20, 25, 30, 40, 50, 60, 80, 100, 120, 160, 200, 240	1	No	3.5
		F2SV-12-∗∗∗-S15		2	Yes	4
	25 W	F2SW-12-∗∗∗-S25	10, 15, 20, 25, 30, 40, 50, 60, 80, 100, 120, 160, 200, 240	1	No	3.5
		F2SV-12-∗∗∗-S25		2	Yes	4

Note: A reduction ratio will be indicated as ∗∗∗ in the nomenclature.
Note: Please refer to page 482 for the performance table.

F2S Type Concentric Right Angle Hollow Bore | Shaft Diameter **15** | **Flange** Mounting

The values in parentheses ( ) are the indications for gearmotors with brake.

<Figure 1>

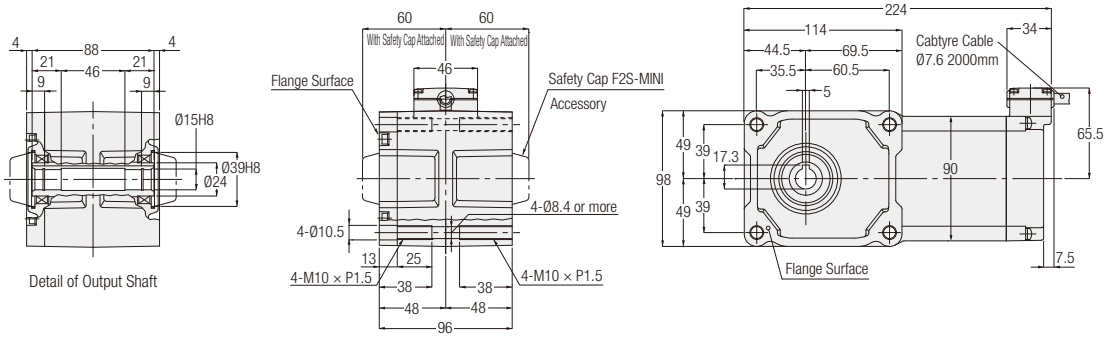

<Figure 2>

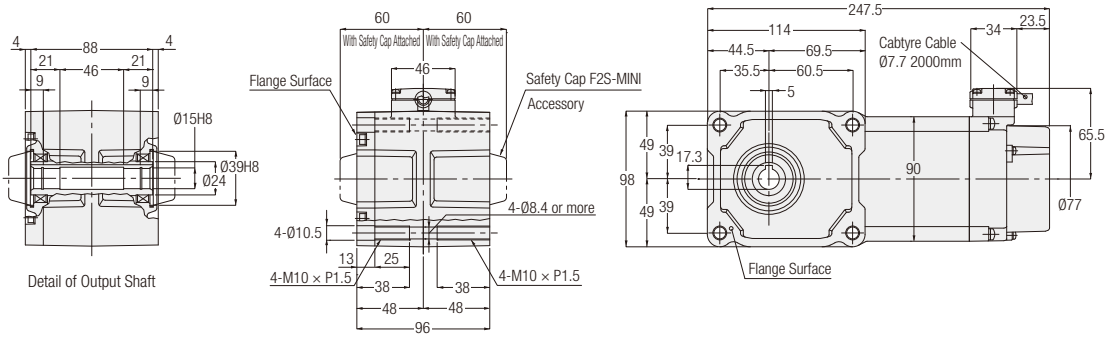

Number of Phases	Power	Part Number	Reduction Ratio	Figure Number	Brake	Approx. Weight (kg)
3-Phase	40 W	F2SW-15-∗∗∗-T40	160, 200, 240	1	No	4.5
		F2SV-15-∗∗∗-T40		2	Yes	5
	60 W	F2SW-15-∗∗∗-T60	10, 15, 20, 25, 30, 40, 50, 60, 80, 100, 120, 160, 200, 240	1	No	4.5
		F2SV-15-∗∗∗-T60		2	Yes	5
	90 W	F2SW-15-∗∗∗-T90	10, 15, 20, 25, 30, 40, 50, 60, 80, 100, 120, 160, 200, 240	1	No	4.5
		F2SV-15-∗∗∗-T90		2	Yes	5
1-Phase	40 W	F2SW-15-∗∗∗-S40	10, 15, 20, 25, 30, 40, 50, 60, 80, 100, 120, 160, 200, 240	1	No	4.5
		F2SV-15-∗∗∗-S40		2	Yes	5

Note: A reduction ratio will be indicated as ∗∗∗ in the nomenclature.
Note: Please refer to page 482 for the performance table.

F3S Type Concentric Right Angle Hollow Bore | Shaft Diameter **20** | **Flange** Mounting

The values in parentheses ( ) are the indications for gearmotors with brake.

<Figure 1>

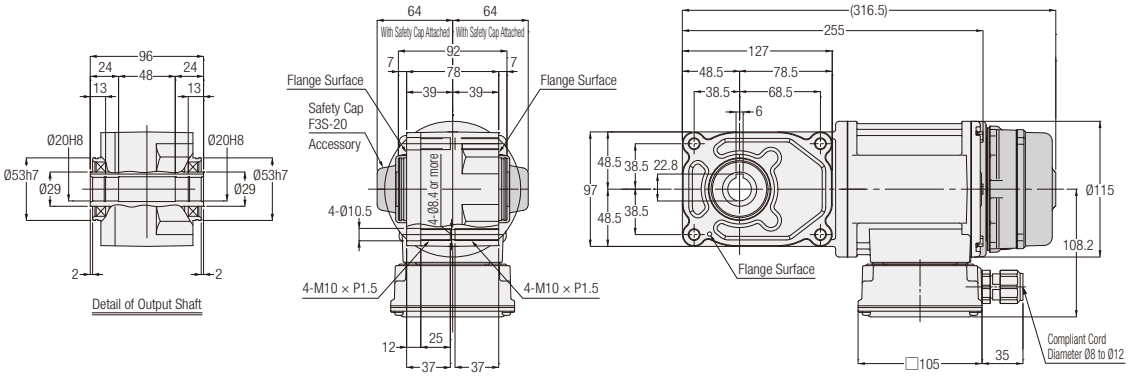

<Figure 2>

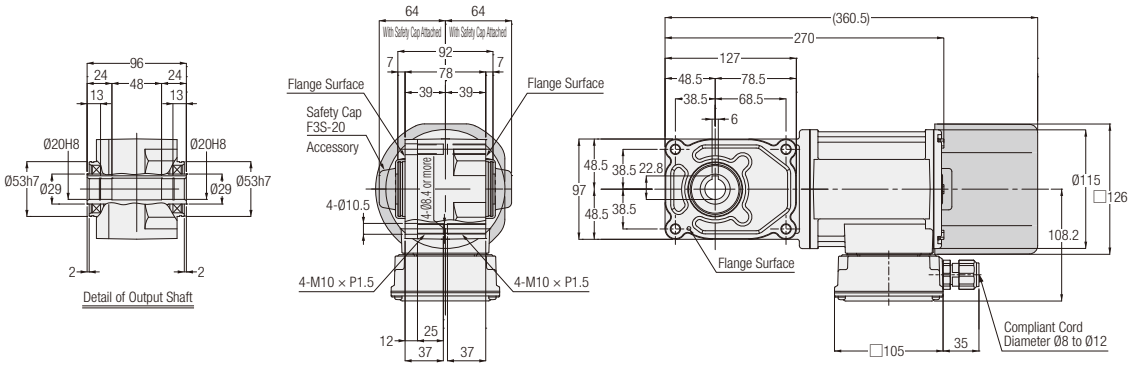

Number of Phases	Power	Output Shaft: Stainless Steel	Output Shaft: Carbon Steel	Reduction Ratio	Figure Number	Brake	Approx. Weight (kg)
3-Phase	0.1 kW	F3S20S∗∗∗-WM01T◇◇EN	F3S20N∗∗∗-WM01T◇◇EN	5, 7.5, 10, 12.5, 15, 20, 25, 30, 40, 50, 60	1	No	6.5
		F3S20S∗∗∗-WM01T◇◇EV◆	F3S20N∗∗∗-WM01T◇◇EV◆			Yes	8
	0.2 kW	F3S20S∗∗∗-WM02T◇◇EN	F3S20N∗∗∗-WM02T◇◇EN	5, 7.5, 10, 12.5, 15, 20, 25, 30	2	No	7.5
		F3S20S∗∗∗-WM02T◇◇EV◆	F3S20N∗∗∗-WM02T◇◇EV◆			Yes	9

Note: A reduction ratio will be indicated as ∗∗∗ in the nomenclature. In addition, a supply voltage/certification code will be indicated as ◇◇, and brake specification will be indicated as ◆.

Note: When the reduction ratio is 7.5, “7” will be indicated as ∗∗∗ in the nomenclature, and when the reduction ratio is 12.5, “12” will be indicated as ∗∗∗ in the nomenclature.

Note: Please refer to page 484 for the performance table.

F3S Type Concentric Right Angle Hollow Bore — Shaft Diameter 25 — Flange Mounting

The values in parentheses ( ) are the indications for gearmotors with brake.

<Figure 1>

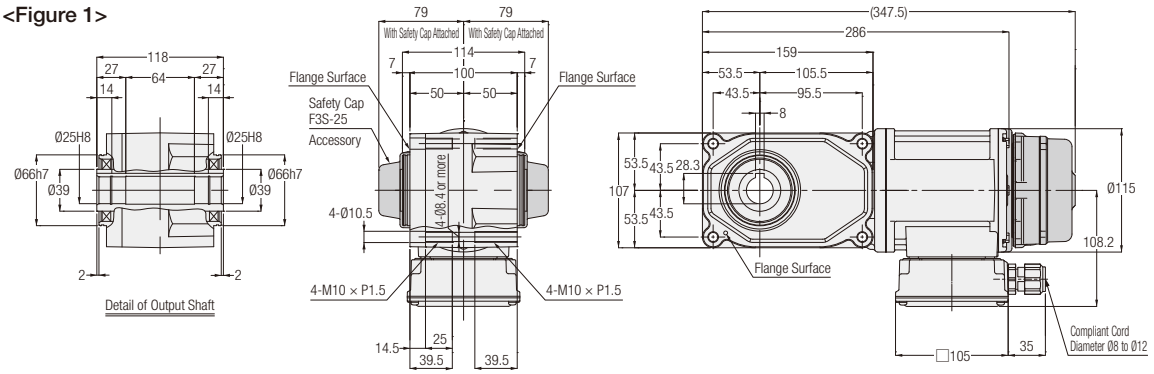

<Figure 2>

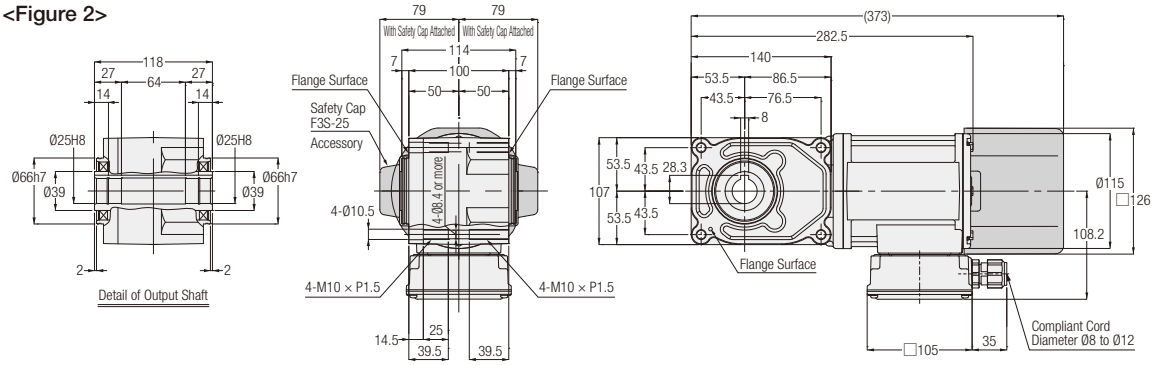

<Figure 3>

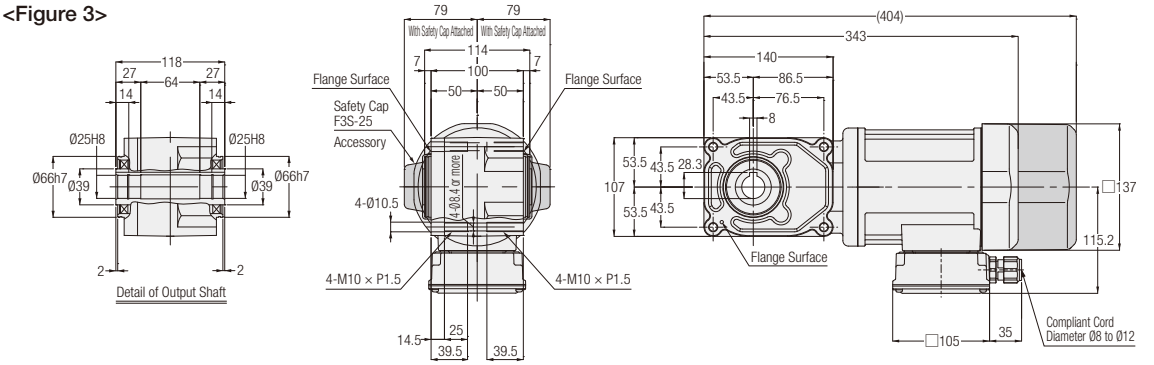

Number of Phases	Power	Output Shaft: Stainless Steel	Output Shaft: Carbon Steel	Reduction Ratio	Figure Number	Brake	Approx. Weight (kg)
3-Phase	0.1 kW	F3S25S∗∗∗-WM01T◇◇EN	F3S25N∗∗∗-WM01T◇◇EN	80, 100, 120, 160, 200, 240	1	No	8
		F3S25S∗∗∗-WM01T◇◇EV◆	F3S25N∗∗∗-WM01T◇◇EV◆			Yes	9.5
	0.2 kW	F3S25S∗∗∗-WM02T◇◇EN	F3S25N∗∗∗-WM02T◇◇EN	5, 7.5, 10, 12.5, 15, 20, 25, 30, 40, 50, 60	2	No	8.5
		F3S25S∗∗∗-WM02T◇◇EV◆	F3S25N∗∗∗-WM02T◇◇EV◆			Yes	10
	0.4 kW	F3S25S∗∗∗-WM04T◇◇EN	F3S25N∗∗∗-WM04T◇◇EN	5, 7.5, 10, 12.5, 15, 20, 25, 30	3	No	10.5
		F3S25S∗∗∗-WM04T◇◇EV◆	F3S25N∗∗∗-WM04T◇◇EV◆			Yes	12

Note: A reduction ratio will be indicated as ∗∗∗ in the nomenclature. In addition, a supply voltage/certification code will be indicated as ◇◇, and brake specification will be indicated as ◆.

Note: When the reduction ratio is 7.5, “7” will be indicated as ∗∗∗ in the nomenclature, and when the reduction ratio is 12.5, “12” will be indicated as ∗∗∗ in the nomenclature.

Note: Please refer to page 484 for the performance table.

F3S Type Concentric Right Angle Hollow Bore | Shaft Diameter **30** | **Flange** Mounting

The values in parentheses ( ) are the indications for gearmotors with brake.

<Figure 1>

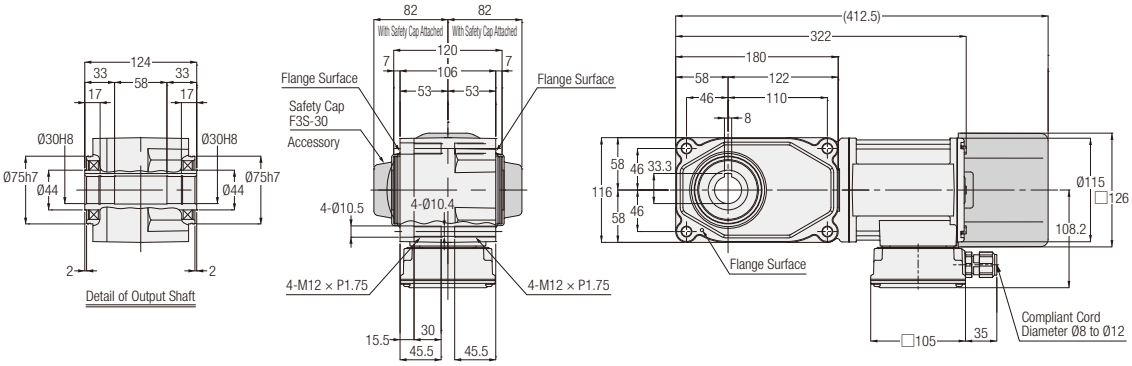

<Figure 2>

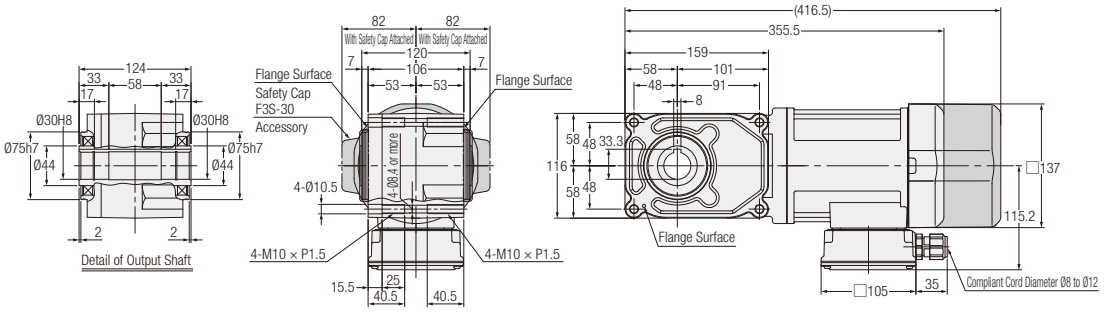

<Figure 3>

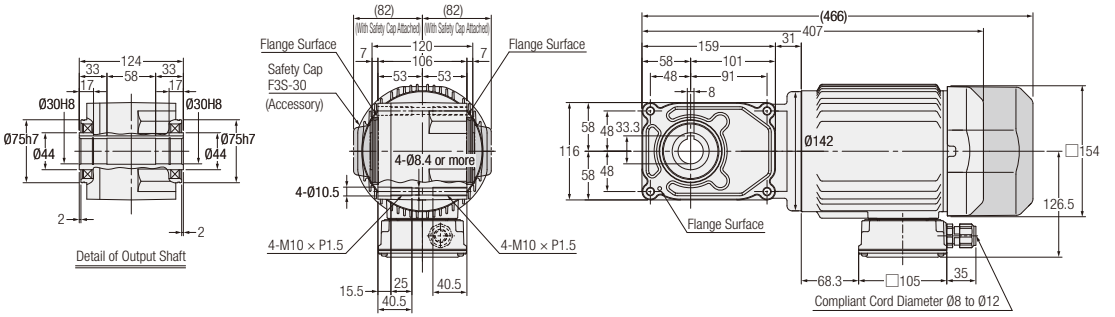

Number of Phases	Power	Output Shaft: Stainless Steel	Output Shaft: Carbon Steel	Reduction Ratio	Figure Number	Brake	Approx. Weight (kg)
3-Phase	0.2 kW	F3S30S∗∗∗-WM02T◇◇EN	F3S30N∗∗∗-WM02T◇◇EN	80, 100, 120, 160, 200, 240	1	No	10
		F3S30S∗∗∗-WM02T◇◇EV◆	F3S30N∗∗∗-WM02T◇◇EV◆			Yes	11.5
	0.4 kW	F3S30S∗∗∗-WM04T◇◇EN	F3S30N∗∗∗-WM04T◇◇EN	5, 7.5, 10, 12.5, 15, 20, 25, 30, 40, 50, 60	2	No	11.5
		F3S30S∗∗∗-WM04T◇◇EV◆	F3S30N∗∗∗-WM04T◇◇EV◆			Yes	13
	0.75 kW	F3S30S∗∗∗-WR08T◇◇EN	F3S30N∗∗∗-WR08T◇◇EN	5, 7.5, 10, 12.5, 15, 20, 25, 30	3	No	18.5
		F3S30S∗∗∗-WR08T◇◇EV◆	F3S30N∗∗∗-WR08T◇◇EV◆			Yes	20.5

Note: A reduction ratio will be indicated as ∗∗∗ in the nomenclature. In addition, a supply voltage/certification code will be indicated as ◇◇, and brake specification will be indicated as ◆.

Note: When the reduction ratio is 7.5, “7” will be indicated as ∗∗∗ in the nomenclature, and when the reduction ratio is 12.5, “12” will be indicated as ∗∗∗ in the nomenclature.

Note: Please refer to page 484 for the performance table.

F3S Type Concentric Right Angle Hollow Bore | Shaft Diameter 35 | **Flange** Mounting

The values in parentheses ( ) are the indications for gearmotors with brake.

<Figure 1>

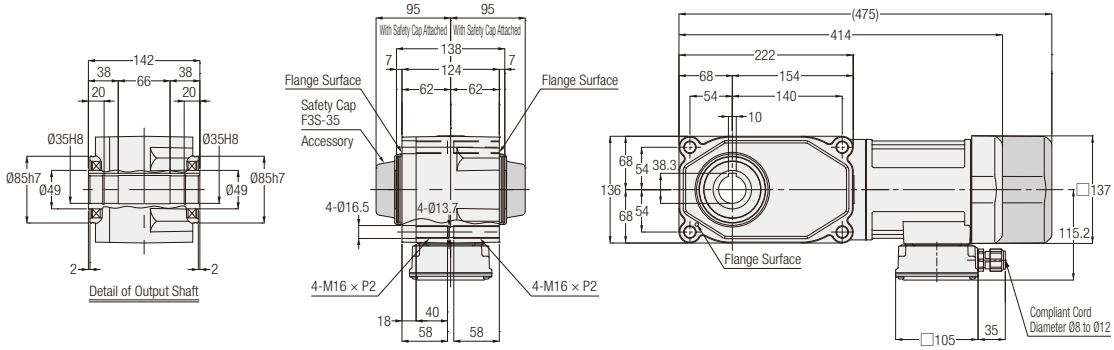

<Figure 2>

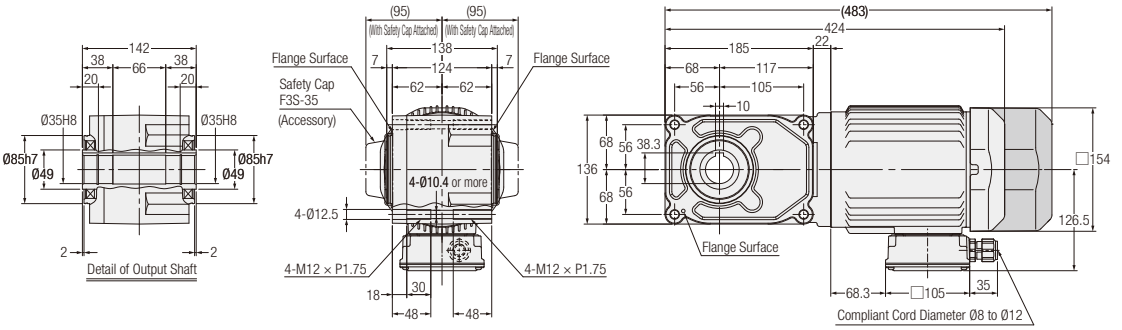

Note: Gearmotors with a motor power of 0.75 kW does not include the hanging plate.

<Figure 3>

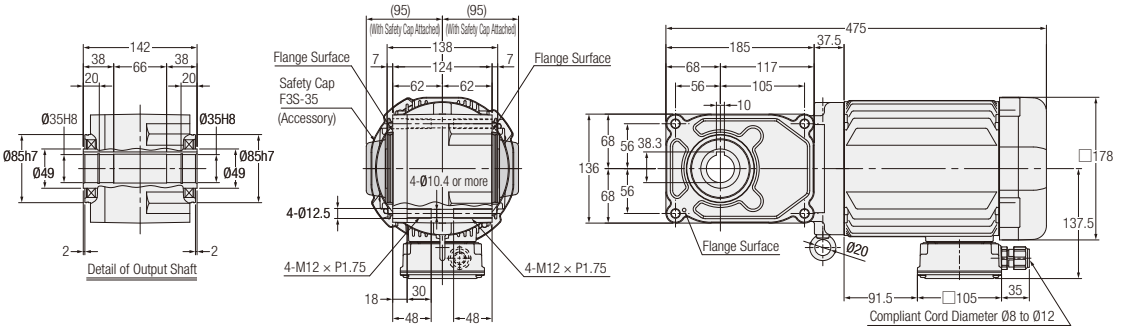

Number of Phases	Power	Output Shaft: Stainless Steel	Output Shaft: Carbon Steel	Reduction Ratio	Figure Number	Brake	Approx. Weight (kg)
3-Phase	0.4 kW	F3S35S∗∗∗-WM04T◇◇EN	F3S35N∗∗∗-WM04T◇◇EN	80, 100, 120, 160, 200, 240	1	No	15
		F3S35S∗∗∗-WM04T◇◇EV◆	F3S35N∗∗∗-WM04T◇◇EV◆			Yes	17
	0.75 kW	F3S35S∗∗∗-WR08T◇◇EN	F3S35N∗∗∗-WR08T◇◇EN	5, 7.5, 10, 12.5, 15, 20, 25, 30, 40, 50, 60	2	No	21
		F3S35S∗∗∗-WR08T◇◇EV◆	F3S35N∗∗∗-WR08T◇◇EV◆			Yes	23
	1.5 kW	F3S35S∗∗∗-WR15T◇◇EN	F3S35N∗∗∗-WR15T◇◇EN	5, 7.5, 10, 12.5, 15, 20, 25, 30	3	No	28

Note: A reduction ratio will be indicated as ∗∗∗ in the nomenclature. In addition, a supply voltage/certification code will be indicated as ◇◇, and brake specification will be indicated as ◆.
Note: When the reduction ratio is 7.5, “7” will be indicated as ∗∗∗ in the nomenclature, and when the reduction ratio is 12.5, “12” will be indicated as ∗∗∗ in the nomenclature.
Note: There are no gearmotors with motor power of 1.5 kW that have a brake.
Note: Please refer to page 485 for the performance table.

F3S Type Concentric Right Angle Hollow Bore | Shaft Diameter **45** | **Flange** Mounting

The values in parentheses ( ) are the indications for gearmotors with brake.

<Figure 1>

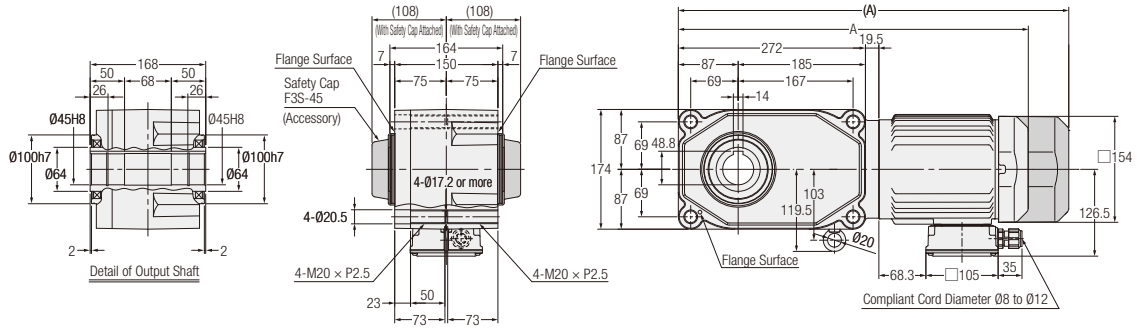

<Figure 2>

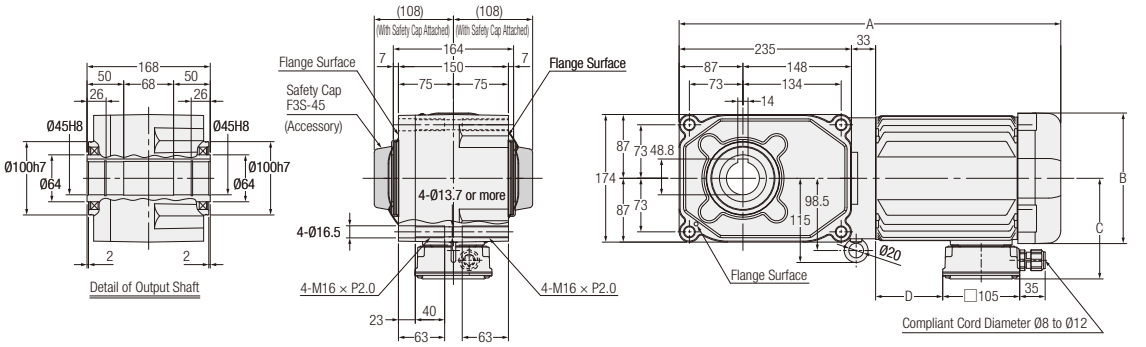

Number of Phases	Power	Output Shaft: Stainless Steel	Output Shaft: Carbon Steel	Reduction Ratio	Figure Number	Brake	Approx. Weight (kg)	A	B	C	D
3-Phase	0.75 kW	F3S45S∗∗∗-WR08T◇◇EN	F3S45N∗∗∗-WR08T◇◇EN	80, 100, 120, 160, 200, 240	1	No	28.5	508.5	-	-	-
		F3S45S∗∗∗-WR08T◇◇EV◆	F3S45N∗∗∗-WR08T◇◇EV◆			Yes	30.5	567.5	-	-	-
	1.5 kW	F3S45S∗∗∗-WR15T◇◇EN	F3S45N∗∗∗-WR15T◇◇EN	5, 7.5, 10, 12.5, 15, 20, 25, 30, 40, 50, 60	2	No	35.5	520.5	□178	137.5	91.5
	2.2 kW	F3S45S∗∗∗-WR22T◇◇EN	F3S45N∗∗∗-WR22T◇◇EN	5, 7.5, 10, 12.5, 15, 20, 25, 30	2	No	42	570	□192	147.5	140.5

Note: A reduction ratio will be indicated as ∗∗∗ in the nomenclature. In addition, a supply voltage/certification code will be indicated as ◇◇, and brake specification will be indicated as ◆.
Note: When the reduction ratio is 7.5, “7” will be indicated as ∗∗∗ in the nomenclature, and when the reduction ratio is 12.5, “12” will be indicated as ∗∗∗ in the nomenclature.
Note: There are no gearmotors with motor power of 1.5 kW and 2.2 kW that have a brake.
Note: Please refer to page 485 for the performance table.

3. Speed Control Gearmotors

3-1. Properties and Motor Characteristics Table

Properties

This gearmotor can be controlled under a wide speed range of 50 to 1400 r/min(50 Hz) or 50 to 1700 r/min(60 Hz)with a designated speed controller via a rate generator (AC generator) installed on the motor.

■ Features

❶ Wide variable speed range
Our original circuit design enables the induction gearmotor to operate continuously from a low speed range of 50 r/min.

Power Source Frequency	Variable speed range
50 Hz	50 to 1400 r/min
60 Hz	50 to 1700 r/min

❷ Outstanding output characteristic
The induction motor has a high allowable load torque value in the low speed range and has a wide high-speed range characteristic as shown in the figure on the right.

❸ Wide variety of types
Products available in eight main types according to applications: two U types (100 V, 200 V) connectable by means of a lead wire with a connector and six plug-in P types (100 V, 200 V).
Note: Please refer to page 631 for detailed specifications.

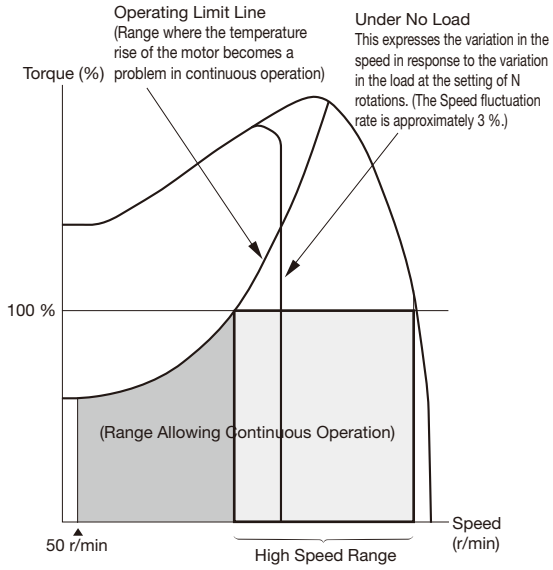

Note: The same speed can be obtained from a speed control gearmotor, regardless of the power source frequency. For example, a speed set in the 50 Hz region remains unchanged in the 60 Hz region, and the same speed can be obtained. (However, the maximum speed is within the range of 1400 r/min.)

Motor Characteristics Table

F2 Type 1-Phase (Speed Control Gearmotors) <Concentric Right Angle Hollow Bore/F2S, Concentric Right Angle Shaft/F2F>

Power (W)	Voltage (V)	Frequency (Hz)	Frame Size	Max Current (A)	High Speed Range (r/min)	Capacitor (μF)
15 W	100/100	50/60	12(15)	0.6/0.6	500 to 1350/550 to 1650	6
	200/200	50/60	12(15)	0.3/0.3	600 to 1400/750 to 1700	1.5
25 W	100/100	50/60	12(15)	0.6/0.6	750 to 1350/1000 to 1650	8
	200/200	50/60	12(15)	0.4/0.4	850 to 1350/1000 to 1650	2
40 W	100/100	50/60	15(18)	0.9/0.9	800 to 1350/1050 to 1650	12
	200/200	50/60	15(18)	0.5/0.5	900 to 1350/1300 to 1650	3
60 W	100/100	50/60	15(18)	1.0/1.7	700 to 1350/800 to 1650	20
	200/200	50/60	15(18)	0.8/0.9	700 to 1350/800 to 1650	5
90 W	100/100	50/60	15(18)	1.4/2.0	950 to 1300/1150 to 1600	26
	200/200	50/60	15(18)	0.9/1.0	1000 to 1350/1150 to 1600	6.5

Note: The number in the parentheses indicates the frame size of the right angle shaft model.

3-2. Graph for Speed Characteristics

Torque-Speed Characteristic Graph

<1-Phase 15 W>

■100 V

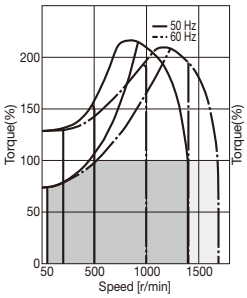

■200 V

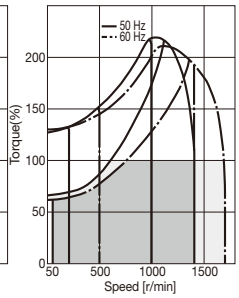

<1-Phase 25 W>

■100 V

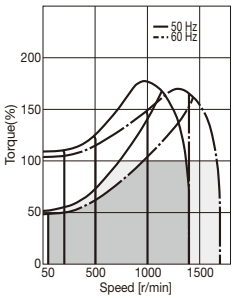

■200 V

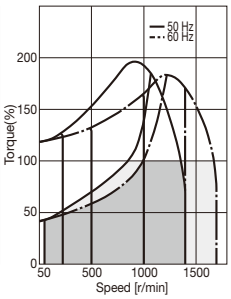

<1-Phase 40 W>

■100 V

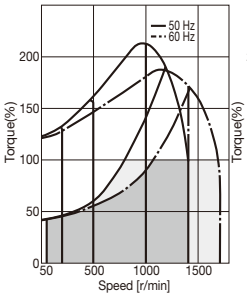

■200 V

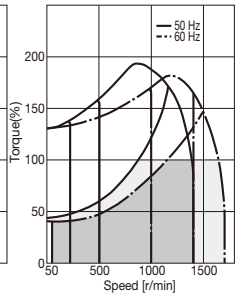

<1-Phase 60 W>

■100 V

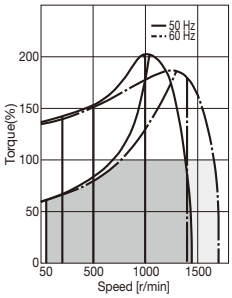

■200 V

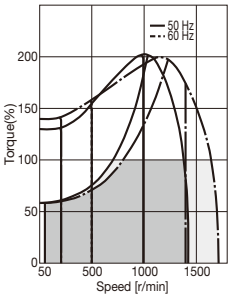

<1-Phase 90 W>

■100 V

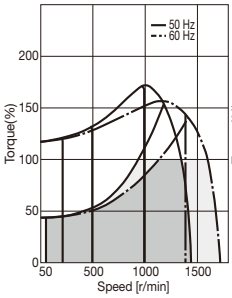

■200 V

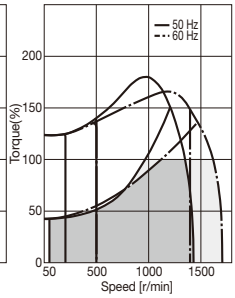

Note: 100 % torque represents the allowable output shaft torque at high speed.

3-3. Performance Table

F2 Type Speed Control Gearmotors <Concentric Right Angle Hollow Bore/F2S>

[Notes]
- The output shaft speed is the value determined with the motor's synch-speed and the reduction ratio.
- Allowable output shaft O.H.L. is the value at 10 mm from the end of the output shaft.
- The "*" mark indicates a limited torque type. Please make sure to check the allowable output shaft torque in the performance table.
- The key for the output shaft is not included.
- In the performance table, the reduction ratio in ▭ indicates that the direction of rotation is clockwise when viewed from the side indicated by arrow Ⓐ shown in the figure on the right when the connection is made as shown on page 546 (CW).

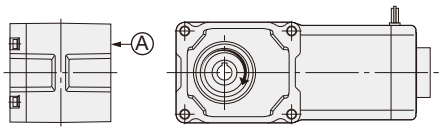

Series	Motor Power	Frame Size	Reduction Ratio	Actual Reduction Ratio	Output Shaft Speed r/min 50 Hz	Output Shaft Speed r/min 60 Hz	Allowable Output Shaft O.H.L. N	Allowable Output Shaft Thrust Load N	Allowable Output Shaft Torque at High Speed N·m	Allowable Output Shaft Torque At 50 r/min (%)	Drawings
MINI	15 W	12	1/10	4/41	150	180	343	88	0.69	70 (100 V) 60 (200 V)	P.500
			1/15	8/123	100	120	441	108	0.98		
			1/20	2/41	75	90	539	137	1.27		
			1/25	8/205	60	72	588	147	1.67		
			1/30	4/123	50	60	686	177	1.96		
			1/40	1/41	37.5	45	784	195	2.65		
			1/50	4/205	30	36	882	226	3.33		
			1/60	20/1189	25	30	882	226	3.92		
			1/80	1/82	18.8	22.5	980	245	5.00		
			1/100	2/205	15	18	980	245	6.27		
			1/120	1/123	12.5	15	1080	275	7.45		
			1/160	1/164	9.4	11.2	1080	275	9.80		
			1/200	1/205	7.5	9	1080	275	12.7		
			1/240	5/1189	6.3	7.5	1080	275	14.7		
	25 W	12	1/10	4/41	150	180	343	88	1.08	50 (100 V) 45 (200 V)	P.500
			1/15	8/123	100	120	441	108	1.67		
			1/20	2/41	75	90	539	137	2.25		
			1/25	8/205	60	72	588	147	2.74		
			1/30	4/123	50	60	686	177	3.33		
			1/40	1/41	37.5	45	784	196	4.41		
			1/50	4/205	30	36	882	226	5.49		
			1/60	20/1189	25	30	882	226	6.66		
			1/80	1/82	18.8	22.5	980	245	8.43		
			1/100	2/205	15	18	980	245	10.8		
			1/120	1/123	12.5	15	1080	275	12.7		
			1/160	1/164	9.4	11.2	1080	275	16.7		
			1/200	1/205	7.5	9	1080	275	20.6		
			1/240	5/1189	6.3	7.5	1080	275	25.5		
	40 W	15	1/10	4/41	150	180	343	108	1.76	40 (100 V) (200 V)	P.501
			1/15	8/123	100	120	441	147	2.65		
			1/20	2/41	75	90	539	186	3.53		
			1/25	8/205	60	72	588	226	4.41		
			1/30	4/123	50	60	686	245	5.29		
			1/40	1/41	37.5	45	784	275	7.06		
			1/50	4/205	30	36	882	294	8.82		
			1/60	20/1189	25	30	882	294	10.8		
			1/80	1/82	18.8	22.5	980	324	13.7		
			1/100	2/205	15	18	980	324	16.7		
			1/120	1/123	12.5	15	1080	343	20.6		
			1/160	1/164	9.4	11.2	1370	343	26.5		
			1/200	1/205	7.5	9	1370	343	33.3		
			1/240	1/246	6.3	7.5	1370	343	40.2		

3-3. Performance Table

Series	Motor Power	Frame Size	Reduction Ratio	Actual Reduction Ratio	Output Shaft Speed r/min 50 Hz	Output Shaft Speed r/min 60 Hz	Allowable Output Shaft O.H.L. N	Allowable Output Shaft Thrust Load N	Allowable Output Shaft Torque at High Speed N·m	Allowable Output Shaft Torque At 50 r/min (%)	Drawings
MINI	60 W	15	1/10	4/41	150	180	343	108	2.74	60 (100 V) 55 (200 V)	P.501
			1/15	8/123	100	120	441	147	4.12		
			1/20	2/41	75	90	539	186	5.49		
			1/25	8/205	60	72	588	226	6.96		
			1/30	4/123	50	60	686	245	8.33		
			1/40	1/41	37.5	45	784	275	10.8		
			1/50	4/205	30	36	882	294	13.7		
			1/60	2/123	25	30	882	294	16.7		
			1/80	1/82	18.8	22.5	1270	324	20.6		
			1/100	2/205	15	18	1270	324	26.5		
			1/120	1/123	12.5	15	1370	343	31.4		
			1/160	1/164	9.4	11.2	1370	343	42.1		
			1/200	1/205	7.5	9	1370	343	52.9		
			* 1/240	1/246	6.3	7.5	1370	343	53.9		
	90 W	15	1/10	4/41	150	180	441	108	4.12	40	P.501
			1/15	8/123	100	120	588	147	6.17		
			1/20	2/41	75	90	735	186	8.33		
			1/25	8/205	60	72	882	226	10.8		
			1/30	4/123	50	60	980	245	12.7		
			1/40	1/41	37.5	45	1080	275	16.7		
			1/50	4/205	30	36	1180	294	20.6		
			1/60	2/123	25	30	1180	294	24.5		
			1/80	1/82	18.8	22.5	1270	324	31.4		
			1/100	2/205	15	18	1270	324	39.2		
			1/120	1/123	12.5	15	1370	343	47.0		
			* 1/160	1/164	9.4	11.2	1370	343	53.9		
			* 1/200	1/205	7.5	9	1370	343	53.9		
			* 1/240	1/246	6.3	7.5	1370	343	53.9		

F2 Type Speed Control Gearmotors <Concentric Right Angle Shaft/F2F>

[Notes]

- The output shaft speed is the value determined with the motor's synch-speed and the reduction ratio.
- Allowable output shaft O.H.L. is the value at the middle of the output shaft.
- The "*" mark indicates a limited torque type. Please make sure to check the allowable output shaft torque in the performance table.
- In the performance table, the reduction ratio in ▭ indicates that the direction of rotation is clockwise when viewed from the side indicated by arrow Ⓐ shown in the figure on the right when the connection is made as shown on page 546 (CW).

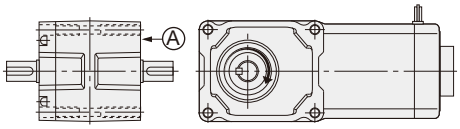

■ F2F (right angle shaft) shaft arrangement

The L shaft of the F2F (concentric right angle shaft) is as shown in [Figure-1]. The F2 type is designed for concentric flange mounting on both sides, and the output shaft can therefore be positioned on the right side as shown in [Figure-2] by rotating the gearmotor to 180 ° about the motor shaft. In this case, however, the lead wires will be in the lower position. If you want to set the lead wires in the upper position for the convenience of use, place an order for the lead wire lower position (option code "T6") for a standard product [Figure-1]. By rotating the gearmotor to 180 ° in this state, the output shaft will be positioned on the right side with the lead wires in the upper position. Please refer to page 581 for changes of the lead wire position.

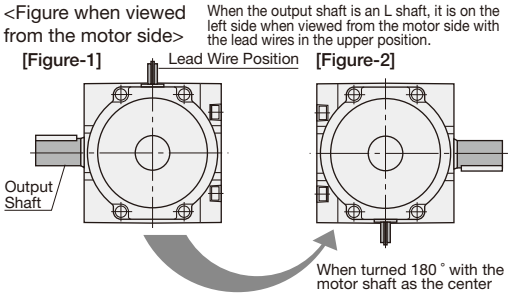

Series	Motor Power	Frame Size	Reduction Ratio	Actual Reduction Ratio	Output Shaft Speed r/min 50 Hz	Output Shaft Speed r/min 60 Hz	Allowable Output Shaft O.H.L. N	Allowable Output Shaft Torque at High Speed N·m	Allowable Output Shaft Torque At 50 r/min (%)	Drawings
MINI	15 W	15	1/10	4/41	150	180	343	0.69	70 (100 V) 60 (200 V)	P.502
			1/15	8/123	100	120	441	0.98		
			1/20	2/41	75	90	539	1.27		
			1/25	8/205	60	72	588	1.67		
			1/30	4/123	50	60	686	1.96		
			1/40	1/41	37.5	45	784	2.65		
			1/50	4/205	30	36	882	3.33		
			1/60	20/1189	25	30	882	3.92		
			1/80	1/82	18.8	22.5	980	5.00		
			1/100	2/205	15	18	980	6.27		
			1/120	1/123	12.5	15	1080	7.45		
			1/160	1/164	9.4	11.2	1080	9.80		
			1/200	1/205	7.5	9	1080	12.7		
			1/240	5/1189	6.3	7.5	1080	14.7		
	25 W	15	1/10	4/41	150	180	343	1.08	50 (100 V) 45 (200 V)	P.502
			1/15	8/123	100	120	441	1.67		
			1/20	2/41	75	90	539	2.25		
			1/25	8/205	60	72	588	2.74		
			1/30	4/123	50	60	686	3.33		
			1/40	1/41	37.5	45	784	4.41		
			1/50	4/205	30	36	882	5.49		
			1/60	20/1189	25	30	882	6.66		
			1/80	1/82	18.8	22.5	980	8.43		
			1/100	2/205	15	18	980	10.8		
			1/120	1/123	12.5	15	1080	12.7		
			1/160	1/164	9.4	11.2	1080	16.7		
			1/200	1/205	7.5	9	1080	20.6		
			1/240	5/1189	6.3	7.5	1080	25.5		

3-3. Performance Table

Series	Motor Power	Frame Size	Reduction Ratio	Actual Reduction Ratio	Output Shaft Speed r/min 50 Hz	Output Shaft Speed r/min 60 Hz	Allowable Output Shaft O.H.L. N	Allowable Output Shaft Torque at High Speed N·m	Allowable Output Shaft Torque At 50 r/min (%)	Drawings
MINI	40 W	18	1/10	4/41	150	180	343	1.76	40 (100 V) (200 V)	P.503
			1/15	8/123	100	120	441	2.65		
			1/20	2/41	75	90	539	3.53		
			1/25	8/205	60	72	588	4.41		
			1/30	4/123	50	60	686	5.29		
			1/40	1/41	37.5	45	784	7.06		
			1/50	4/205	30	36	882	8.82		
			1/60	20/1189	25	30	882	10.8		
			1/80	1/82	18.8	22.5	980	13.7		
			1/100	2/205	15	18	980	16.7		
			1/120	1/123	12.5	15	1080	20.6		
			1/160	1/164	9.4	11.2	1370	26.5		
			1/200	1/205	7.5	9	1370	33.3		
			1/240	1/246	6.3	7.5	1370	40.2		
	60 W	18	1/10	4/41	150	180	343	2.74	60 (100 V) 55 (200 V)	P.503
			1/15	8/123	100	120	441	4.12		
			1/20	2/41	75	90	539	5.49		
			1/25	8/205	60	72	588	6.96		
			1/30	4/123	50	60	686	8.33		
			1/40	1/41	37.5	45	784	10.8		
			1/50	4/205	30	36	882	13.7		
			1/60	2/123	25	30	882	16.7		
			1/80	1/82	18.8	22.5	1270	20.6		
			1/100	2/205	15	18	1270	26.5		
			1/120	1/123	12.5	15	1370	31.4		
			1/160	1/164	9.4	11.2	1370	42.1		
			1/200	1/205	7.5	9	1370	52.9		
			* 1/240	1/246	6.3	7.5	1370	53.9		
	90 W	18	1/10	4/41	150	180	441	4.12	40	P.503
			1/15	8/123	100	120	588	6.17		
			1/20	2/41	75	90	735	8.33		
			1/25	8/205	60	72	882	10.8		
			1/30	4/123	50	60	980	12.7		
			1/40	1/41	37.5	45	1080	16.7		
			1/50	4/205	30	36	1180	20.6		
			1/60	2/123	25	30	1180	24.5		
			1/80	1/82	18.8	22.5	1270	31.4		
			1/100	2/205	15	18	1270	39.2		
			1/120	1/123	12.5	15	1370	47.0		
			* 1/160	1/164	9.4	11.2	1370	53.9		
			* 1/200	1/205	7.5	9	1370	53.9		
			* 1/240	1/246	6.3	7.5	1370	53.9		

3-4. Drawings

F2S Type Concentric Right Angle Hollow Bore | Shaft Diameter 12 | **Flange** Mounting

<Figure 1>

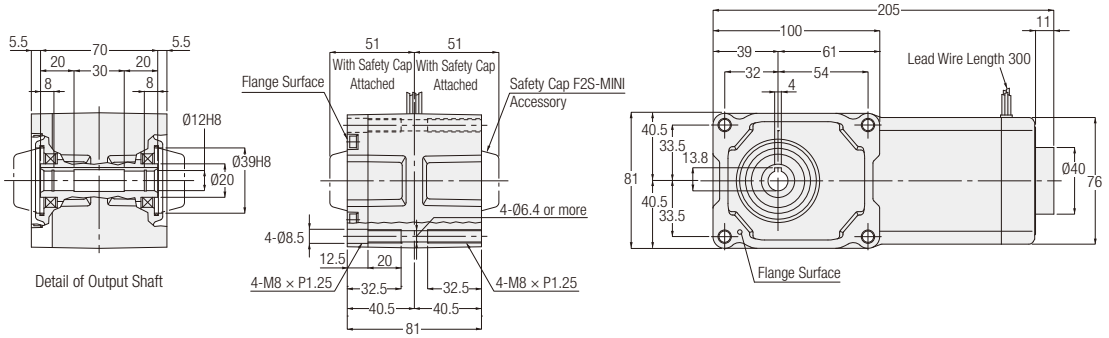

Number of Phases	Power	Part Number	Reduction Ratio	Figure Number	Controller	Approx. Weight (kg)
1-Phase	15 W	F2SU-12-∗∗∗-S15	10, 15, 20, 25, 30, 40, 50, 60, 80, 100, 120, 160, 200, 240	1	Sold as a set	3
		F2SU-12-∗∗∗-S15W				
		F2SP-12-∗∗∗-S15	10, 15, 20, 25, 30, 40, 50, 60, 80, 100, 120, 160, 200, 240	1	Sold Separately	3
		F2SP-12-∗∗∗-S15W				
	25 W	F2SU-12-∗∗∗-S25	10, 15, 20, 25, 30, 40, 50, 60, 80, 100, 120, 160, 200, 240	1	Sold as a set	3
		F2SU-12-∗∗∗-S25W				
		F2SP-12-∗∗∗-S25	10, 15, 20, 25, 30, 40, 50, 60, 80, 100, 120, 160, 200, 240	1	Sold Separately	3
		F2SP-12-∗∗∗-S25W				

Note: A reduction ratio will be indicated as ∗∗∗ in the nomenclature.
Note: Please refer to page 496 for the performance table.

F2S Type Concentric Right Angle Hollow Bore | Shaft Diameter 15 | **Flange** Mounting

<Figure 1>

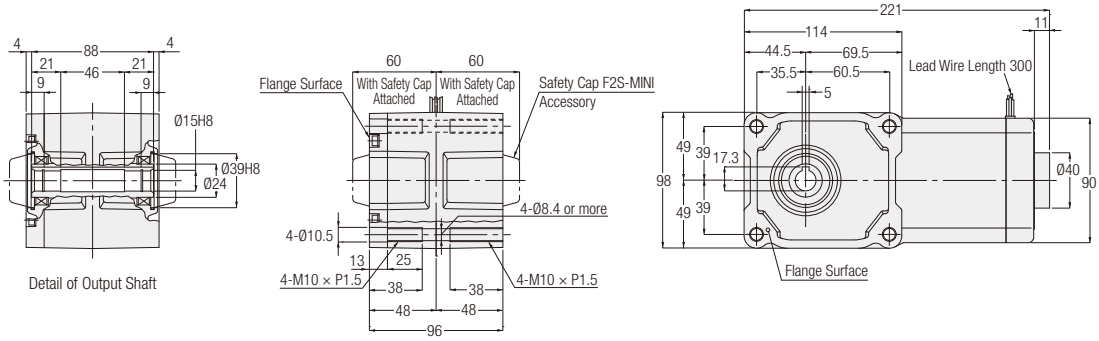

<Figure 2>

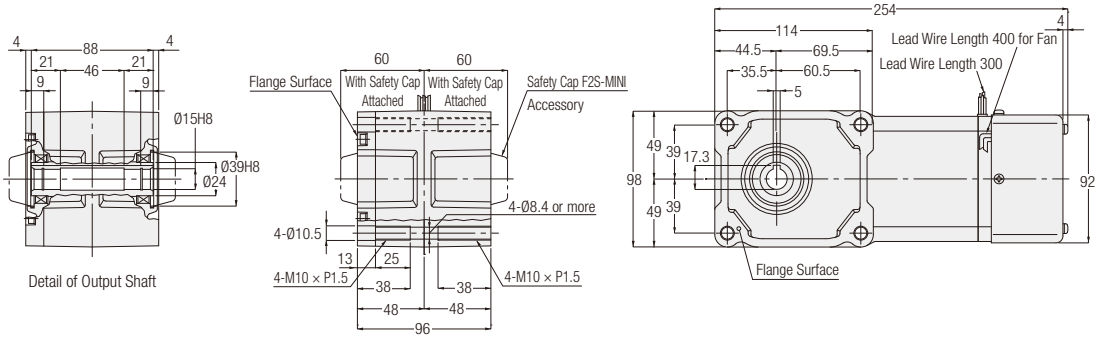

Number of Phases	Power	Part Number	Reduction Ratio	Figure Number	Controller	Approx. Weight (kg)
1-Phase	40 W	F2SU-15-∗∗∗-S40	10, 15, 20, 25, 30, 40, 50, 60, 80, 100, 120, 160, 200, 240	1	Sold as a set	4
		F2SU-15-∗∗∗-S40W				
		F2SP-15-∗∗∗-S40	10, 15, 20, 25, 30, 40, 50, 60, 80, 100, 120, 160, 200, 240	1	Sold Separately	4
		F2SP-15-∗∗∗-S40W				
	60 W	F2SU-15-∗∗∗-S60	10, 15, 20, 25, 30, 40, 50, 60, 80, 100, 120, 160, 200, 240	2	Sold as a set	4
		F2SU-15-∗∗∗-S60W				
		F2SP-15-∗∗∗-S60	10, 15, 20, 25, 30, 40, 50, 60, 80, 100, 120, 160, 200, 240	2	Sold Separately	4
		F2SP-15-∗∗∗-S60W				
	90 W	F2SU-15-∗∗∗-S90	10, 15, 20, 25, 30, 40, 50, 60, 80, 100, 120, 160, 200, 240	2	Sold as a set	4
		F2SU-15-∗∗∗-S90W				
		F2SP-15-∗∗∗-S90	10, 15, 20, 25, 30, 40, 50, 60, 80, 100, 120, 160, 200, 240	2	Sold Separately	4
		F2SP-15-∗∗∗-S90W				

Note: A reduction ratio will be indicated as ∗∗∗ in the nomenclature.
Note: Please refer to page 496 for the performance table.

F2F Type Concentric Right Angle Shaft | Shaft Diameter 15 | Flange Mounting

<Figure 1>

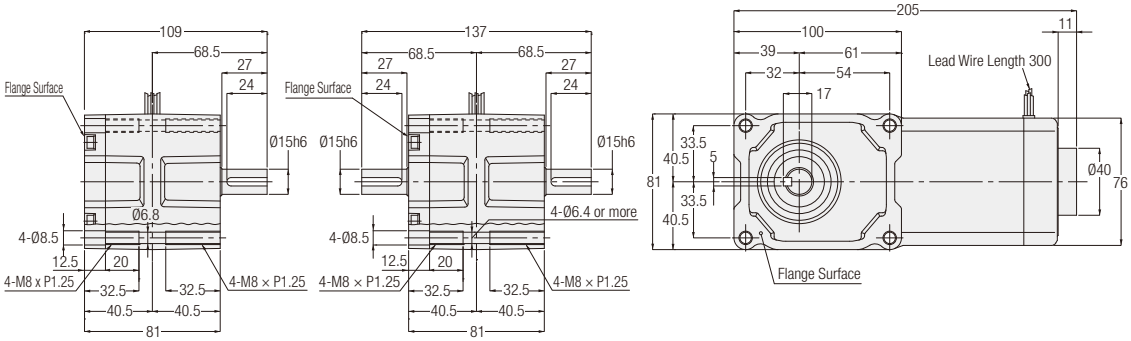

L Shaft T Shaft

Number of Phases	Power	Part Number	Reduction Ratio	Figure Number	Controller	Approx. Weight (kg)
1-Phase	15 W	F2FU-15#-***-S15	10, 15, 20, 25, 30, 40, 50, 60, 80, 100, 120, 160, 200, 240	1	Sold as a set	3
		F2FU-15#-***-S15W				
		F2FP-15#-***-S15	10, 15, 20, 25, 30, 40, 50, 60, 80, 100, 120, 160, 200, 240	1	Sold Separately	3
		F2FP-15#-***-S15W				
	25 W	F2FU-15#-***-S25	10, 15, 20, 25, 30, 40, 50, 60, 80, 100, 120, 160, 200, 240	1	Sold as a set	3
		F2FU-15#-***-S25W				
		F2FP-15#-***-S25	10, 15, 20, 25, 30, 40, 50, 60, 80, 100, 120, 160, 200, 240	1	Sold Separately	3
		F2FP-15#-***-S25W				

Note: A shaft arrangement (L, T) will be indicated as # in the nomenclature. In addition, a reduction ratio will be indicated as ***.
Note: Please refer to page 498 for the performance table.

F2F Type Concentric Right Angle Shaft | Shaft Diameter **18** | **Flange** Mounting

<Figure 1>

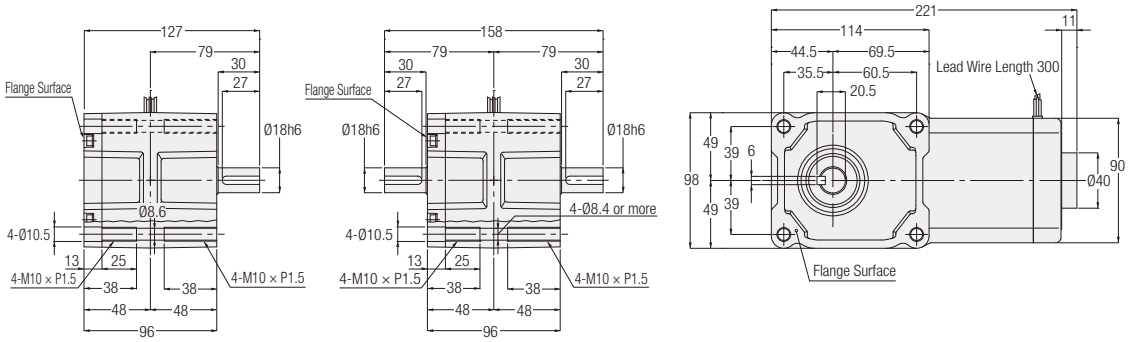

<Figure 2>

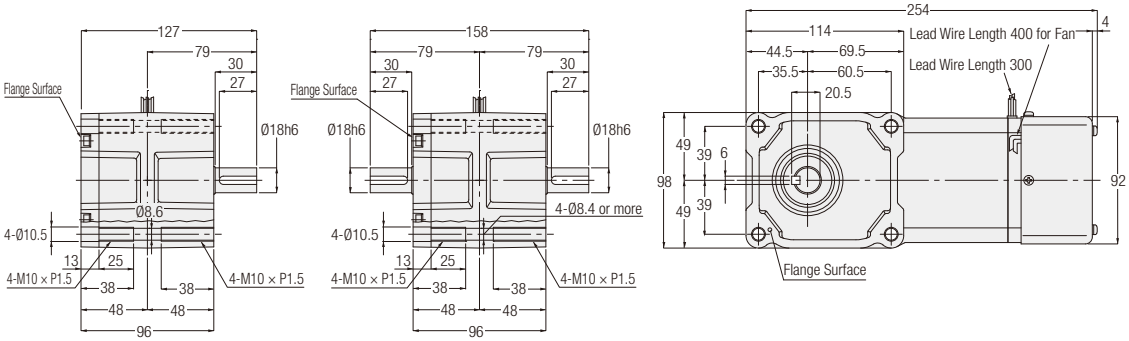

L Shaft T Shaft

Number of Phases	Power	Part Number	Reduction Ratio	Figure Number	Controller	Approx. Weight (kg)
1-Phase	40 W	F2FU-18#-***-S40	10, 15, 20, 25, 30, 40, 50, 60, 80, 100, 120, 160, 200, 240	1	Sold as a set	4
		F2FU-18#-***-S40W				
		F2FP-18#-***-S40	10, 15, 20, 25, 30, 40, 50, 60, 80, 100, 120, 160, 200, 240	1	Sold Separately	4
		F2FP-18#-***-S40W				
	60 W	F2FU-18#-***-S60	10, 15, 20, 25, 30, 40, 50, 60, 80, 100, 120, 160, 200, 240	2	Sold as a set	4
		F2FU-18#-***-S60W				
		F2FP-18#-***-S60	10, 15, 20, 25, 30, 40, 50, 60, 80, 100, 120, 160, 200, 240	2	Sold Separately	4
		F2FP-18#-***-S60W				
	90 W	F2FU-18#-***-S90	10, 15, 20, 25, 30, 40, 50, 60, 80, 100, 120, 160, 200, 240	2	Sold as a set	4
		F2FU-18#-***-S90W				
		F2FP-18#-***-S90	10, 15, 20, 25, 30, 40, 50, 60, 80, 100, 120, 160, 200, 240	2	Sold Separately	4
		F2FP-18#-***-S90W				

Note: A shaft arrangement (L, T) will be indicated as # in the nomenclature. In addition, a reduction ratio will be indicated as ***.
Note: Please refer to page 499 for the performance table.

4. Gearboxes (Double Shaft Type)

4-1. Performance Table

[Notes]
- The motor power class value is based on usage with a 4 poles motor.
- When using a motor other than a 4 poles motor, the value obtained by multiplying the torque by the torque correction coefficient shown on page 626 shall be the allowable output shaft torque at the rotation.
- Allowable output shaft O.H.L. is the value at 20 mm from the end of the output shaft.
- Please refer to "■ Rotational Direction Relationship (when viewed from the flange surface side)" for the rotational direction of the output shaft.
- The "*" mark indicates a limited torque type. Please make sure to check the allowable output shaft torque in the performance table.
- The key for the output shaft is not included.

■ Rotational Direction Relationship (when viewed from the flange surface side)

The rotational direction shown with arrow illustrates the rotation relationship between the output shaft and input shaft/ and is no way illustrating limitations in rotational direction.

Type	Power	Reduction Ratio
Concentric Right Angle Hollow Bore/F3S Type	0.1 kW to 2.2 kW	1/5 to 1/60

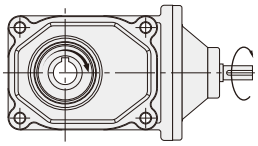

Type	Power	Reduction Ratio
Concentric Right Angle Hollow Bore/F3S Type	0.1 kW to 0.75 kW	1/80 to 1/240

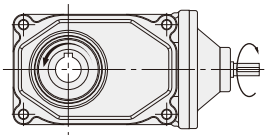

4 Poles Motor Power Class	Frame Size	Reduction Ratio	Actual Reduction Ratio	Allowable Output Shaft Torque Input (1500 r/min)	Allowable O.H.L. N		Allowable Output Shaft Thrust Load	Drawings
				N·m	Input Shaft	Output Shaft	N	
0.1 kW	20	1/5	1/5	2.5	196	980	244	P.506
		1/7.5	2/15	3.8		1080	270	
		1/10	1/10	5.2		1180	294	
		1/12.5	2/25	6.5		1270	316	
		1/15	1/15	7.7		1320	333	
		1/20	1/20	11		1470	373	
		1/25	1/25	13		1570	392	
		1/30	2/59	16		1670	422	
		1/40	1/40	21		1810	451	
		1/50	1/50	25		1860	471	
		1/60	1/59	31		1860	471	
	25	1/80	1/80	39	196	2550	637	P.506
		1/100	19/1880	49		2550	637	
		1/120	1/120	59		2550	637	
		1/160	1/160	78		2550	637	
		1/200	1/200	98		2550	637	
		* 1/240	1/240	101		2550	637	
0.2 kW	25	1/5	1/5	5.5	245	1230	307	P.506
		1/7.5	2/15	8.3		1370	342	
		1/10	1/10	11		1520	380	
		1/12.5	19/235	14		1620	405	
		1/15	1/15	17		1720	429	
		1/20	1/20	23		1860	466	
		1/25	1/25	27		2010	502	
		1/30	1/30	33		2110	527	
		1/40	1/40	44		2300	576	
		1/50	1/50	55		2450	613	
		1/60	1/60	67		2550	637	
	30	1/80	1/80	84	245	3090	775	P.507
		1/100	19/1880	105		3140	785	
		1/120	1/120	126		3140	785	
		1/160	1/160	169		3140	785	
		* 1/200	1/200	184		3140	785	
		* 1/240	1/240	184		3140	785	

4-1. Performance Table

4 Poles Motor Power Class	Frame Size	Reduction Ratio	Actual Reduction Ratio	Allowable Output Shaft Torque Input (1500 r/min)	Allowable O.H.L. N		Allowable Output Shaft Thrust Load	Drawings
				N·m	Input Shaft	Output Shaft	N	
0.4 kW	30	1/5	1/5	11	294	1520	375	P.507
		1/7.5	2/15	17		1760	438	
		1/10	1/10	23		1910	475	
		1/12.5	19/235	27		2060	506	
		1/15	1/15	33		2160	539	
		1/20	1/20	44		2400	600	
		1/25	1/25	55		2550	637	
		1/30	1/30	67		2650	662	
		1/40	1/40	88		2840	711	
		1/50	1/50	111		2990	747	
		1/60	1/60	133		3090	767	
	35	1/80	1/80	169	294	3480	873	P.508
		1/100	19/1880	211		3530	883	
		1/120	1/120	253		3530	883	
		* 1/160	1/160	270		3630	912	
		* 1/200	1/200	270		3630	912	
		* 1/240	1/240	270		3630	912	
0.75 kW	35	1/5	1/5	21	392	1960	500	P.508
		1/7.5	2/15	31		2250	567	
		1/10	1/10	41		2450	613	
		1/12.5	19/235	52		2600	669	
		1/15	1/15	63		2740	686	
		1/20	1/20	83		2990	747	
		1/25	1/25	104		3190	796	
		1/30	1/30	124		3280	821	
		1/40	1/40	166		3480	870	
		1/50	1/50	208		3480	870	
		1/60	1/60	249		3480	870	
	45	1/80	1/80	316	392	4750	1177	P.509
		1/100	19/1880	395		4750	1177	
		1/120	1/120	473		4750	1177	
		* 1/160	1/160	554		5190	1275	
		* 1/200	1/200	554		5190	1275	
		* 1/240	1/240	554		5190	1275	
1.5 kW	45	1/5	1/5	41	392	2940	800	P.509
		1/7.5	2/15	63		3330	900	
		1/10	1/10	83		3630	967	
		1/12.5	19/235	104		3920	1040	
		1/15	1/15	124		4070	1067	
		1/20	1/20	166		4460	1067	
		1/25	1/25	208		4700	1067	
		1/30	1/30	249		4750	1067	
		1/40	1/40	332		4750	1067	
		1/50	1/50	416		4750	1067	
		1/60	1/60	498		4750	1067	
2.2 kW	45	1/5	1/5	61	392	3140	800	P.509
		1/7.5	2/15	91		3530	900	
		1/10	1/10	122		3920	967	
		1/12.5	19/235	152		4120	1040	
		1/15	1/15	182		4410	1067	
		1/20	1/20	244		4750	1067	
		1/25	1/25	305		4750	1067	
		1/30	1/30	366		4750	1067	

4-2. Drawings

F3S Type Concentric Right Angle Hollow Bore | Shaft Diameter 20 | Flange Mounting

<Figure 1>

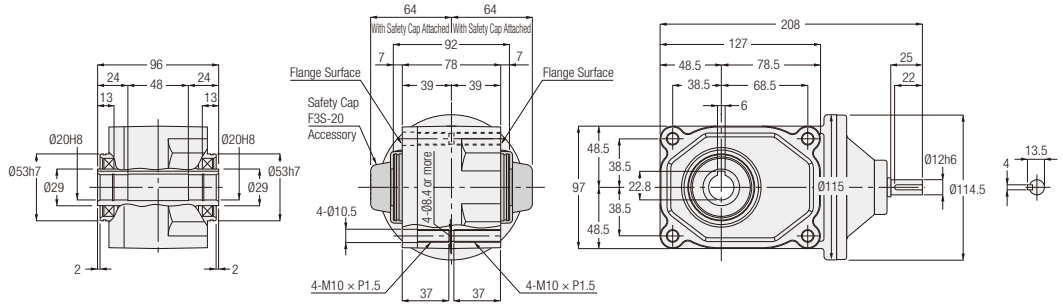

Motor Power Class	Part Number	Reduction Ratio	Figure Number	Approx. Weight (kg)
0.1 kW	F3S-20-∗∗∗-010	5, 7.5, 10, 12.5, 20, 25, 30, 40, 50, 60	1	3.5

Note: A reduction ratio will be indicated as ∗∗∗ in the nomenclature.
Note: Please refer to page 504 for the performance table.

F3S Type Concentric Right Angle Hollow Bore | Shaft Diameter 25 | Flange Mounting

<Figure 2>

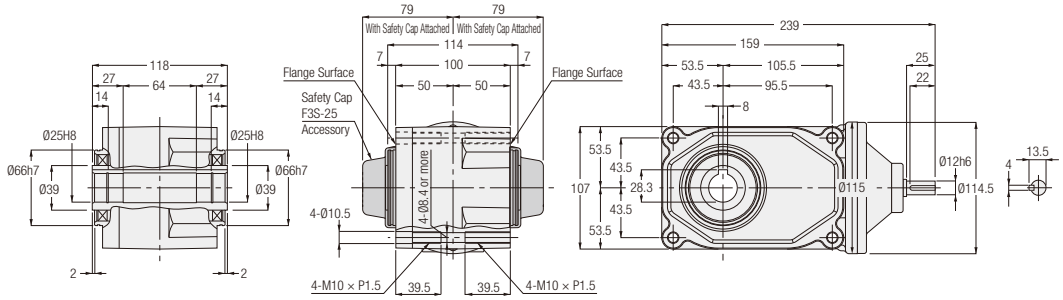

<Figure 3>

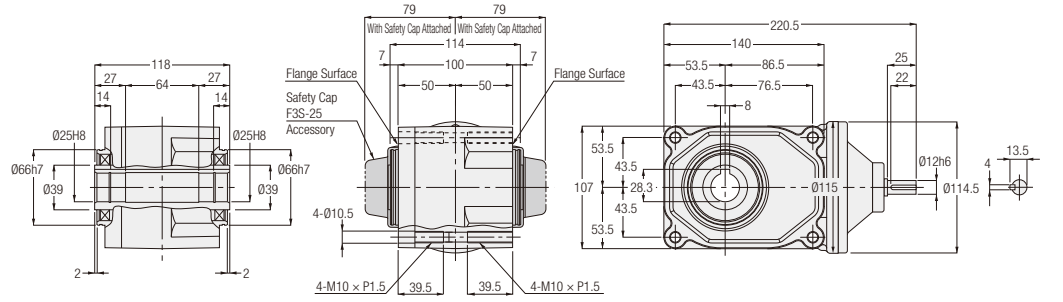

Motor Power Class	Part Number	Reduction Ratio	Figure Number	Approx. Weight (kg)
0.1 kW	F3S-25-∗∗∗-010	80, 100, 120, 160, 200, 240	2	5
0.2 kW	F3S-25-∗∗∗-020	5, 7.5, 10, 12.5, 20, 25, 30, 40, 50, 60	3	5

Note: A reduction ratio will be indicated as ∗∗∗ in the nomenclature.
Note: Please refer to page 504 for the performance table.

F3S Type Concentric Right Angle Hollow Bore | Shaft Diameter 30 | **Flange** Mounting

<Figure 1>

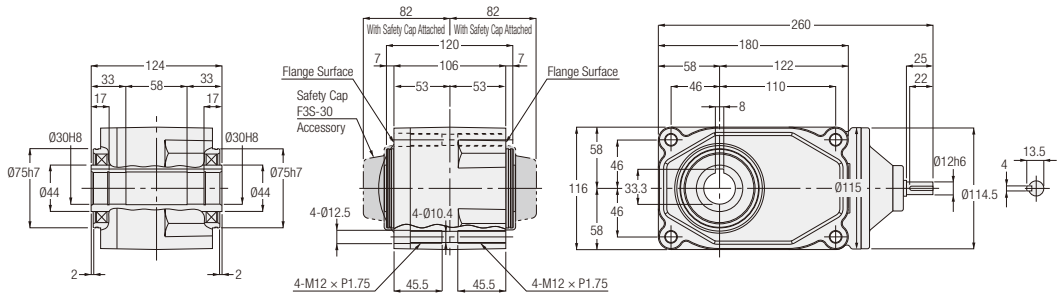

<Figure 2>

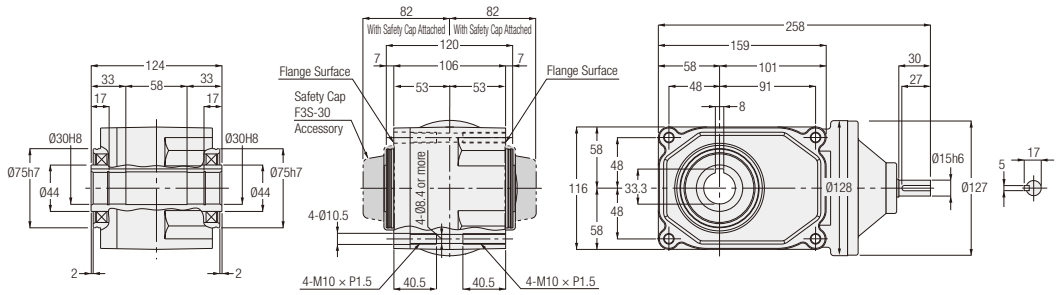

Motor Power Class	Part Number	Reduction Ratio	Figure Number	Approx. Weight (kg)
0.2 kW	F3S-30-∗∗∗-020	80, 100, 120, 160, 200, 240	1	6.5
0.4 kW	F3S-30-∗∗∗-040	5, 7.5, 10, 12.5, 20, 25, 30, 40, 50, 60	2	6.5

Note: A reduction ratio will be indicated as ∗∗∗ in the nomenclature.
Note: Please refer to page 504 for the performance table.

F3S Type Concentric Right Angle Hollow Bore | Shaft Diameter 35 | Flange Mounting

<Figure 1>

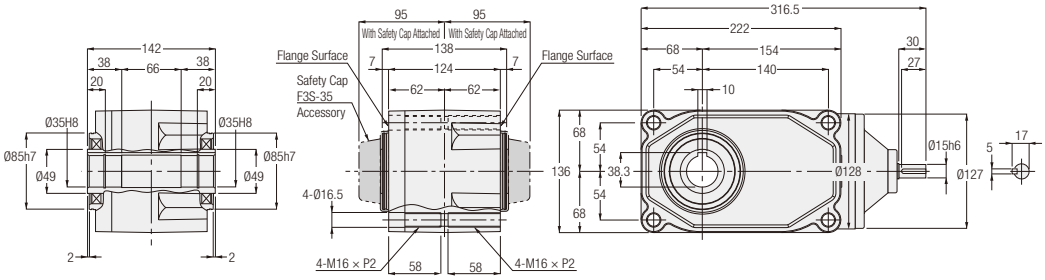

<Figure 2>

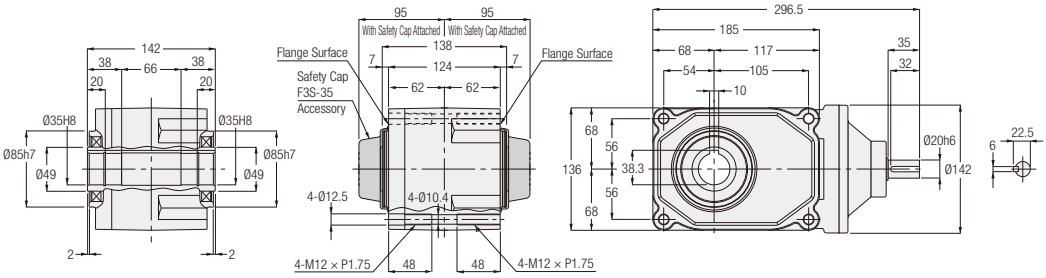

Motor Power Class	Part Number	Reduction Ratio	Figure Number	Approx. Weight (kg)
0.4 kW	F3S-35-∗∗∗-040	80, 100, 120, 160, 200, 240	1	9
0.75 kW	F3S-35-∗∗∗-075	5, 7.5, 10, 12.5, 20, 25, 30, 40, 50, 60	2	9

Note: A reduction ratio will be indicated as ∗∗∗ in the nomenclature.
Note: Please refer to page 505 for the performance table.

F3S Type Concentric Right Angle Hollow Bore | Shaft Diameter 45 | **Flange** Mounting

<Figure 1>

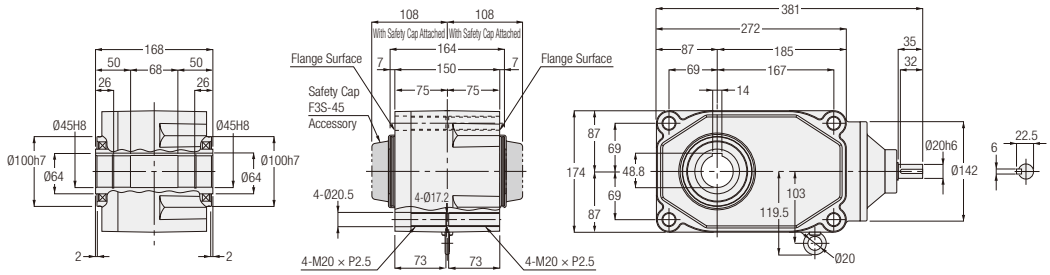

<Figure 2>

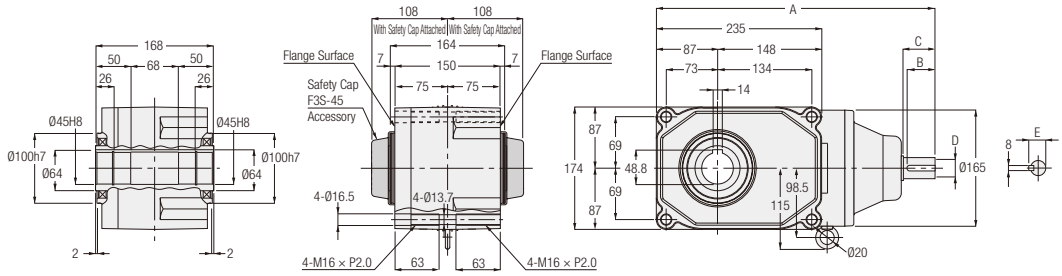

Power Class	Part Number	Reduction Ratio	Figure Number	Approx. Weight (kg)	A	B	C	D	E
0.75 kW	F3S-45-∗∗∗-075	80, 100, 120, 160, 200, 240	1	18	-	-	-	-	-
1.5 kW	F3S-45-∗∗∗-150	5, 7.5, 10, 12.5, 20, 25, 30, 40, 50, 60	2	18	384.5	35	40	Ø25h6	28
2.2 kW	F3S-45-∗∗∗-220	5, 7.5, 10, 12.5, 15, 50, 25, 30	2	18	396.5	40	45	Ø30h6	33

Note: A reduction ratio will be indicated as ∗∗∗ in the nomenclature.
Note: Please refer to page 505 for the performance table.

5. S-Type Gearboxes (Type Which Can Be Equipped with Designated Motor)

5-1. Performance Table

[Notes]
- The value of the allowable output shaft torque is the value when a 4 poles motor is used.
- When using a motor other than a 4 poles motor, the value obtained by multiplying the torque by the torque correction coefficient shown on page 626 shall be the allowable output shaft torque at the rotation.
- The key for the output shaft is not included.
- Allowable output shaft O.H.L. is the value at 20 mm from the end of the output shaft.
- Please refer to "■ Rotational Direction Relationship (when viewed from the flange surface side)" for the rotational direction of the output shaft.
- The "*" mark indicates a limited torque type. Please make sure to check the allowable output shaft torque in the performance table.

■ Rotational Direction Relationship (when viewed from the flange surface side)

The rotational direction shown with arrow illustrates the rotation relationship between the output shaft and input shaft/ and is no way illustrating limitations in rotational direction.

Type	Power	Reduction Ratio
Concentric Right Angle Hollow Bore/F3S Type	0.1 kW to 2.2 kW	1/5 to 1/60

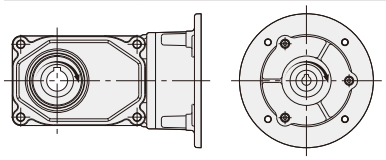

Type	Power	Reduction Ratio
Concentric Right Angle Hollow Bore/F3S Type	0.1 kW to 0.75 kW	1/80 to 1/240

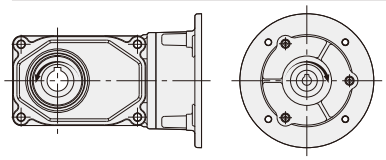

4 Poles Motor Power Class	Frame Size	Reduction Ratio	Actual Reduction Ratio	Allowable Output Shaft Torque N·m 50 Hz	Allowable Output Shaft Torque N·m 60 Hz	Allowable Output Shaft O.H.L. N	Allowable Output Shaft Thrust Load N	Drawings
0.1 kW	20	1/5	1/5	2.5	2.2	980	244	P.512
		1/7.5	2/15	3.8	3.2	1080	270	
		1/10	1/10	5.2	4.3	1180	294	
		1/12.5	2/25	6.5	5.4	1270	316	
		1/15	1/15	7.7	6.5	1320	333	
		1/20	1/20	11	8.6	1470	373	
		1/25	1/25	13	11	1570	392	
		1/30	2/59	16	13	1670	422	
		1/40	1/40	21	18	1810	451	
		1/50	1/50	25	22	1860	471	
		1/60	1/59	31	25	1860	471	
	25	1/80	1/80	39	32	2550	637	P.512
		1/100	19/1880	49	41	2550	637	
		1/120	1/120	59	49	2550	637	
		1/160	1/160	78	66	2550	637	
		1/200	1/200	98	81	2550	637	
		* 1/240	1/240	101	98	2550	637	
0.2 kW	25	1/5	1/5	5.5	4.6	1230	307	P.512
		1/7.5	2/15	8.3	7	1370	342	
		1/10	1/10	11	9.2	1520	380	
		1/12.5	19/235	14	12	1620	405	
		1/15	1/15	17	14	1720	429	
		1/20	1/20	23	19	1860	466	
		1/25	1/25	27	24	2010	502	
		1/30	1/30	33	27	2110	527	
		1/40	1/40	44	37	2300	576	
		1/50	1/50	55	46	2450	613	
		1/60	1/60	67	55	2550	637	
	30	1/80	1/80	84	71	3090	775	P.513
		1/100	19/1880	105	87	3140	785	
		1/120	1/120	126	105	3140	785	
		1/160	1/160	169	140	3140	785	
		* 1/200	1/200	184	175	3140	785	
		* 1/240	1/240	184	184	3140	785	

5-1. Performance Table

4 Poles Motor Power Class	Frame Size	Reduction Ratio	Actual Reduction Ratio	Allowable Output Shaft Torque N·m 50 Hz	Allowable Output Shaft Torque N·m 60 Hz	Allowable Output Shaft O.H.L. N	Allowable Output Shaft Thrust Load N	Drawings
0.4 kW	30	1/5	1/5	11	9.2	1520	375	P.513
		1/7.5	2/15	17	14	1760	438	
		1/10	1/10	23	19	1910	475	
		1/12.5	19/235	27	24	2060	506	
		1/15	1/15	33	27	2160	539	
		1/20	1/20	44	37	2400	600	
		1/25	1/25	55	46	2550	637	
		1/30	1/30	67	55	2650	662	
		1/40	1/40	88	74	2840	711	
		1/50	1/50	111	92	2990	747	
		1/60	1/60	133	111	3090	767	
	35	1/80	1/80	169	140	3480	873	P.514
		1/100	19/1880	211	175	3530	883	
		1/120	1/120	253	211	3530	883	
		* 1/160	1/160	270	270	3630	912	
		* 1/200	1/200	270	270	3630	912	
		* 1/240	1/240	270	270	3630	912	
0.75 kW	35	1/5	1/5	21	18	1960	500	P.514
		1/7.5	2/15	31	25	2250	567	
		1/10	1/10	41	34	2450	613	
		1/12.5	19/235	52	43	2600	669	
		1/15	1/15	63	52	2740	686	
		1/20	1/20	83	70	2990	747	
		1/25	1/25	104	86	3190	796	
		1/30	1/30	124	104	3280	821	
		1/40	1/40	166	138	3480	870	
		1/50	1/50	208	173	3480	870	
		1/60	1/60	249	208	3480	870	
	45	1/80	1/80	316	263	4750	1177	P.515
		1/100	19/1880	395	328	4750	1177	
		1/120	1/120	473	395	4750	1177	
		* 1/160	1/160	554	526	5190	1275	
		* 1/200	1/200	554	554	5190	1275	
		* 1/240	1/240	554	554	5190	1275	
1.5 kW	45	1/5	1/5	41	34	2940	800	P.515
		1/7.5	2/15	63	52	3330	900	
		1/10	1/10	83	70	3630	967	
		1/12.5	19/235	104	86	3920	1040	
		1/15	1/15	124	104	4070	1067	
		1/20	1/20	166	138	4460	1067	
		1/25	1/25	208	173	4700	1067	
		1/30	1/30	249	208	4750	1067	
		1/40	1/40	332	276	4750	1067	
		1/50	1/50	416	345	4750	1067	
		1/60	1/60	498	416	4750	1067	
2.2 kW	45	1/5	1/5	61	51	3140	800	P.515
		1/7.5	2/15	91	76	3530	900	
		1/10	1/10	122	102	3920	967	
		1/12.5	19/235	152	126	4120	1040	
		1/15	1/15	182	152	4410	1067	
		1/20	1/20	244	203	4750	1067	
		1/25	1/25	305	254	4750	1067	
		1/30	1/30	366	305	4750	1067	

5-2. Drawings

F3S Type Concentric Right Angle Hollow Bore | Shaft Diameter **20** | **Flange** Mounting

<Figure 1>

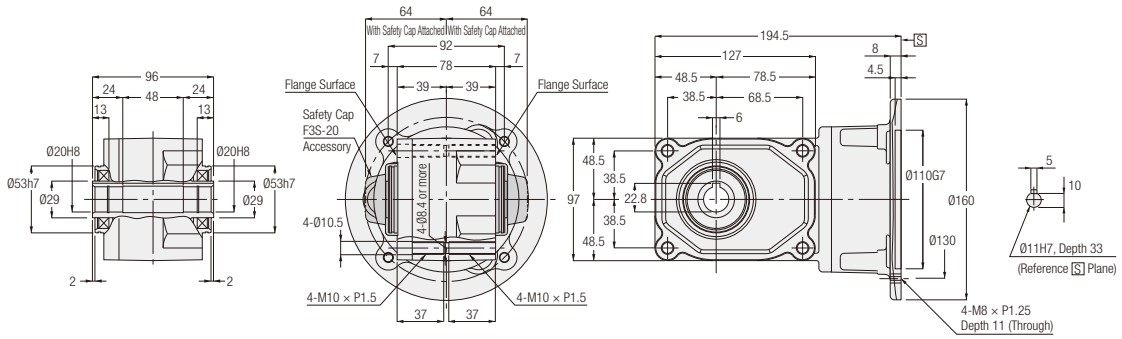

Motor Power Class	Part Number	Reduction Ratio	Figure Number	Approx. Weight (kg)
0.1 kW	F3SS-20-∗∗∗-010	5, 7.5, 10, 12.5, 20, 25, 30, 40, 50, 60	1	4

Note: A reduction ratio will be indicated as ∗∗∗ in the nomenclature.
Note: Please refer to page 510 for the performance table.
Note: Please refer to page 630 for the details of the motor mounting area.

F3S Type Concentric Right Angle Hollow Bore | Shaft Diameter **25** | **Flange** Mounting

<Figure 2>

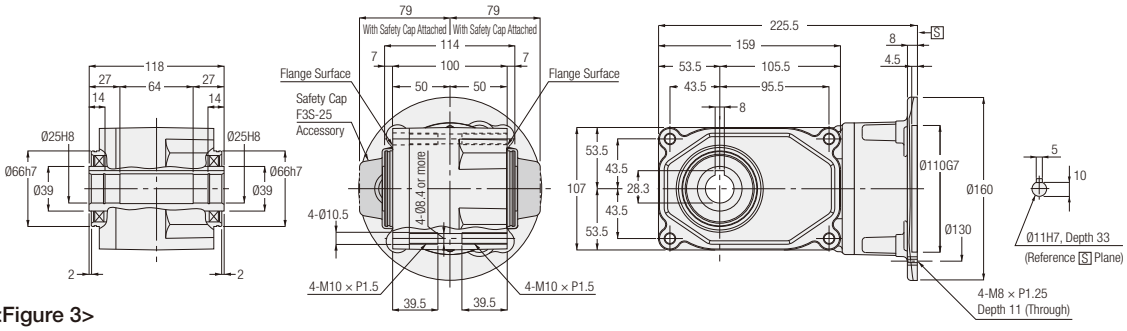

<Figure 3>

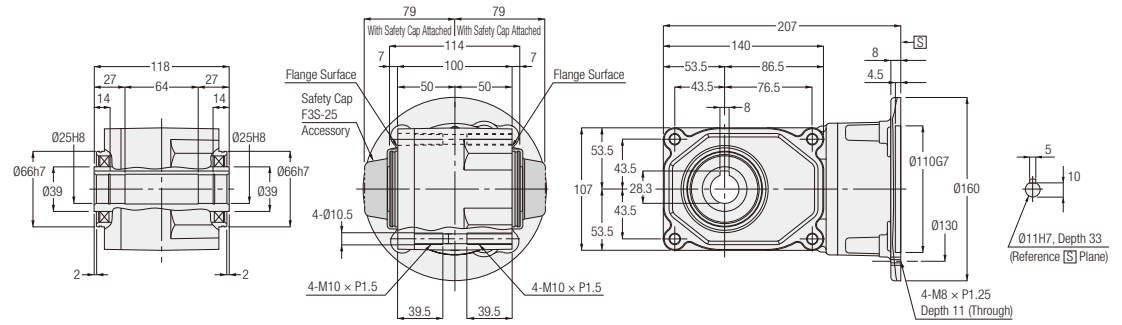

Motor Power Class	Part Number	Reduction Ratio	Figure Number	Approx. Weight (kg)
0.1 kW	F3SS-25-∗∗∗-010	80, 100, 120, 160, 200, 240	2	5.5
0.2 kW	F3SS-25-∗∗∗-020	5, 7.5, 10, 12.5, 20, 25, 30, 40, 50, 60	3	5.5

Note: A reduction ratio will be indicated as ∗∗∗ in the nomenclature.
Note: Please refer to page 510 for the performance table.
Note: Please refer to page 630 for the details of the motor mounting area.

F3S Type Concentric Right Angle Hollow Bore | Shaft Diameter 30 | **Flange** Mounting

<Figure 1>

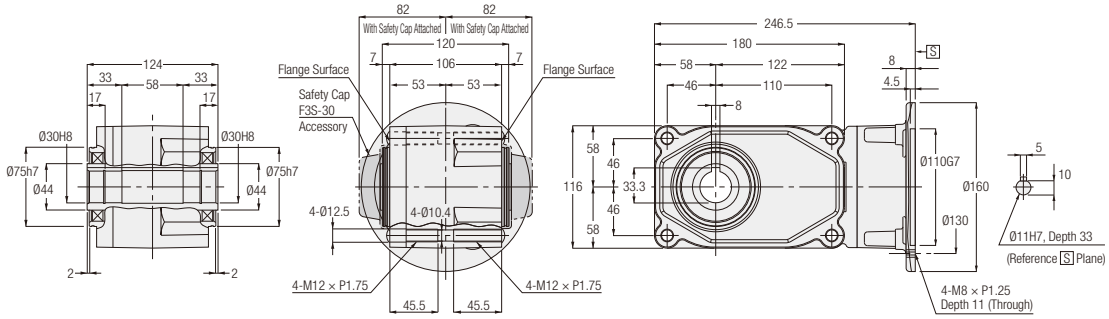

<Figure 2>

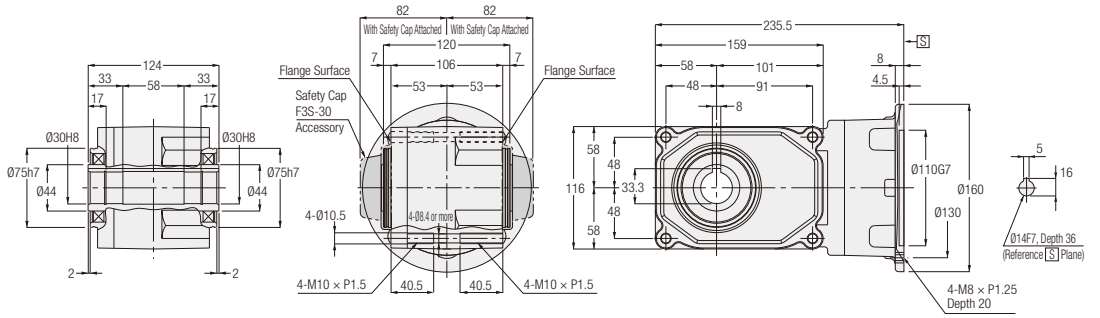

Motor Power Class	Part Number	Reduction Ratio	Figure Number	Approx. Weight (kg)
0.2 kW	F3SS-30-∗∗∗-020	80, 100, 120, 160, 200, 240	1	7
0.4 kW	F3SS-30-∗∗∗-040	5, 7.5, 10, 12.5, 15, 20, 25, 30, 40, 50, 60	2	7

Note: A reduction ratio will be indicated as ∗∗∗ in the nomenclature.
Note: Please refer to page 510 for the performance table.
Note: Please refer to page 630 for the details of the motor mounting area.

F3S Type Concentric Right Angle Hollow Bore | Shaft Diameter 35 | Flange Mounting

<Figure 1>

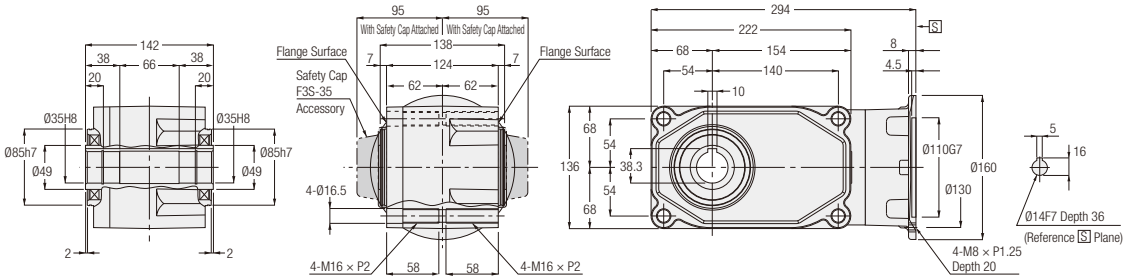

<Figure 2>

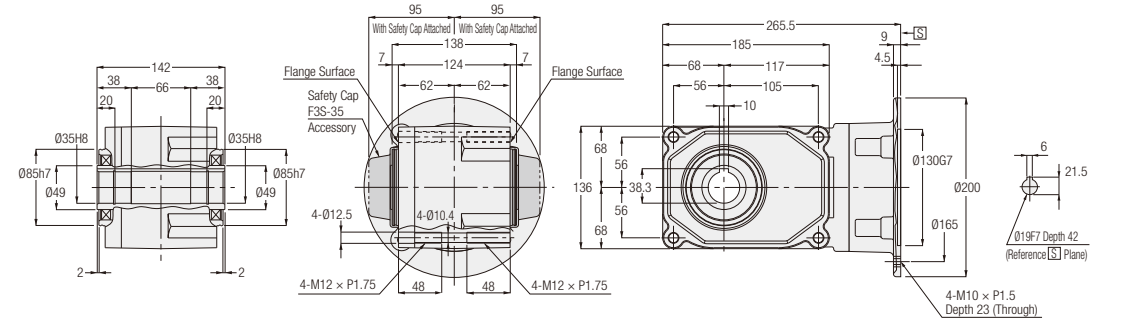

Motor Power Class	Part Number	Reduction Ratio	Figure Number	Approx. Weight (kg)
0.4 kW	F3SS-35-∗∗∗-040	80, 100, 120, 160, 200, 240	1	10.5
0.75 kW	F3SS-35-∗∗∗-075	5, 7.5, 10, 12.5, 15, 20, 25, 30, 40, 50, 60	2	10.5

Note: A reduction ratio will be indicated as ∗∗∗ in the nomenclature.
Note: Please refer to page 511 for the performance table.
Note: Please refer to page 630 for the details of the motor mounting area.

F3S Type Concentric Right Angle Hollow Bore | Shaft Diameter **45** | **Flange** Mounting

<Figure 1>

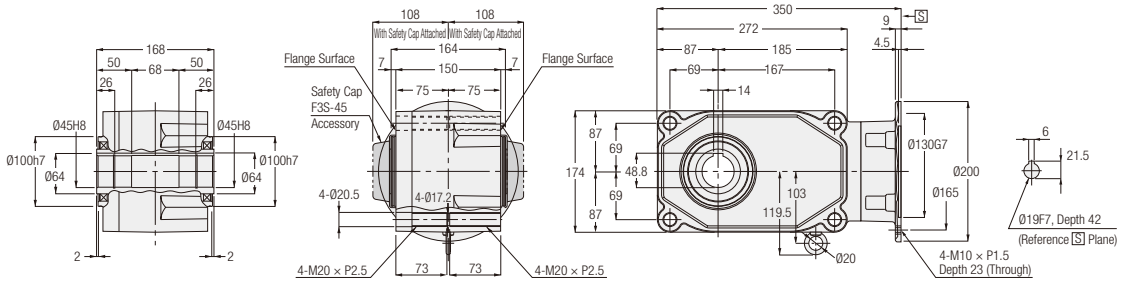

<Figure 2>

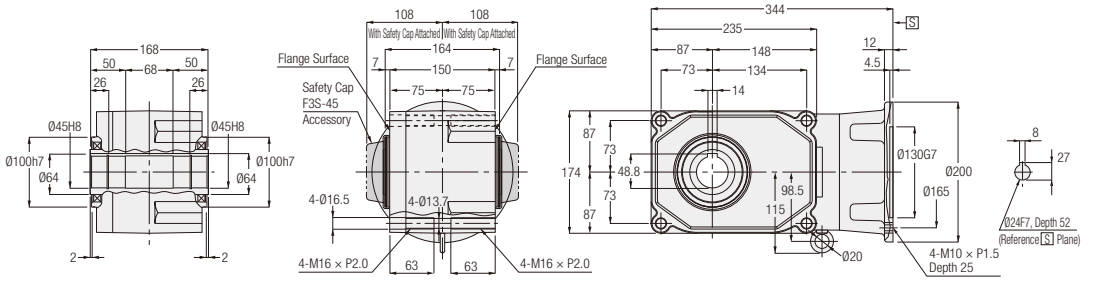

<Figure 3>

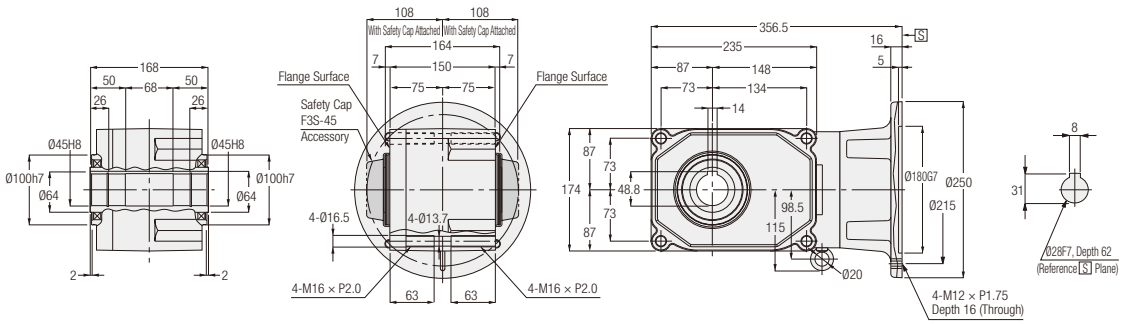

Motor Power Class	Part Number	Reduction Ratio	Figure Number	Approx. Weight (kg)
0.75 kW	F3SS-45-∗∗∗-075	80, 100, 120, 160, 200, 240	1	17.5
1.5 kW	F3SS-45-∗∗∗-150	5, 7.5, 10, 12.5, 15, 20, 25, 30, 40, 50, 60	2	17.5
2.2 kW	F3SS-45-∗∗∗-220	5, 7.5, 10, 12.5, 15, 50, 25, 30	3	17.5

Note: A reduction ratio will be indicated as ∗∗∗ in the nomenclature.
Note: Please refer to page 511 for the performance table.
Note: Please refer to page 630 for the details of the motor mounting area.

MEMO

Technical Documentation

INDUCTION GEARMOTORS

P.518 Selection Process Steps and Examples
P.524 Service Factor (Sf)
P.525 Allowable Moment of Inertia J
P.526 Method for Calculating Moment of Inertia J
P.527 Overhung Load (O.H.L.)
P.530 Material for Calculating Gearmotors with Brake and Gearmotors with Clutch/Brake
P.531 Moment of Inertia of the Gearmotors
P.533 Structural Diagram
P.538 Specifications and Structure of Gearmotors with Brake
P.545 Specifications of Gearmotors with Simple Brake/Motor Lead Wires
P.546 Wiring Diagram of Gearmotors
P.549 Wiring Diagram of Gearmotors with Brake
P.557 Wiring Diagram of Gearmotors with Clutch/Brake
P.558 Wiring Diagram of Built-in Rectifier of Gearmotors with Brake
P.564 Wiring Diagram of IP65 Gearmotors with Brake
P.569 Braking Delay Time: ta
P.570 Terminal Box
P.575 Terminal Box Dimensions and Positions
P.581 Positional Change of the Terminal Box
P.588 Dimensions Required for Removing the Fan Cover and the Brake Cover
P.589 Rectifier and Surge Suppressor of Gearmotors with Brake
P.590 Manual Brake Release Lever (optional)
P.591 Combination of Gearmotors and Inverter/VFD
P.593 Global Standards Conformance
P.626 Gearboxes (Double Shaft Type)
P.627 S-Type Gearboxes
P.628 Detailed Dimensions of Double Shaft Type/S-Type Gearboxes Input Shaft
P.631 Speed Control Gearmotors
P.642 Precautions for Use

Selection Process Steps and Examples

MINI Series

Selection Examples In the case of shaft mount

Application ..... Conveyor (light shock load)
Conveyor speed ..... 10 m/min
Carrying weight ..... 50 kg
Connection method ..... Chain
Operation time ..... 12 hours/day
Number of startups and stops ... 720 times/day
Power source frequency ..... 60 Hz region
Friction coefficient ..... 0.2 (estimated)

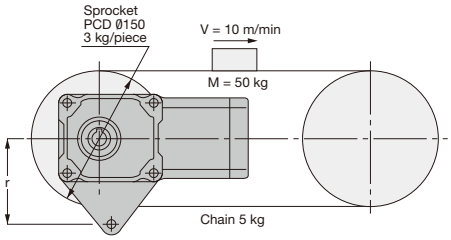

Conditions other than those shown in the selection process steps shall not be included in this calculation.

Please utilize the calculation and selection tool on our website.
(https://sentei.nissei-gtr.co.jp/english/calculation)
You may calculate the necessary power by inputting the usage conditions and the series on our website.

Selection Process Steps		Selection Examples
①Determining the reduction ratio	Determining the reduction ratio (i) $i = \frac{\text{Required Speed of Output Shaft}}{1600 \text{ (estimated)}}$	Required Speed of Conveyor Shaft = $\frac{10 \times 1000}{150 \times \pi} \approx 21.2$ r/min Since the speed of the conveyor shaft and that of the gearbox output shaft are the same: $i = \frac{21.2}{1600} \approx \frac{1}{75}$ $i = \frac{1}{80}$ (Note: The speed of the motor varies between the synchronous speed and the rated speed, depending on the level of the load.)
②Calculating the torque	Calculating the actual load torque (T_L)	$T_L = 9.8 \times (50 + 3 \times 2 + 5) \times 0.2 \times \frac{150}{2 \times 1000} = 9.0$ N·m
	With use of the service factor (Sf) in [Table-1] on page 500, calculating the equivalent output torque (T_{LE}) $T_{LE} = T_L \times Sf$	Using the service factor (Sf), adjust the actual load torque (T_L). $T_{LE} = 9.0 \times 1.25 \approx 11.25$ N·m
③Calculating the inertia	Calculating the actual inertial load	Calculating the actual load's moment of inertia (J_L) $J_L = \{50 \times (\frac{0.15}{2})^2\} + \{\frac{1}{2} \times 3 \times (\frac{0.15}{2})^2 \times 2\} + \{5 \times (\frac{0.15}{2})^2\}$ $= 0.33$ kg·m^2
	Calculating the inertial load on the motor shaft	Converting J_L into the motor shaft equivalent (J_ℓ) $J_\ell = J_L \times (i)^2$ $J_\ell = 0.33 \times (\frac{1}{80})^2$ ≈ 0.000052 kg·m^2
	Calculating the equivalent inertia by correction based on operation conditions	Correction coefficient = 3 based on operation conditions
		Calculating the equivalent moment of inertia J ($J_{\ell E}$) $J_{\ell E} = J_\ell \times$ (Correction Coefficient) [Table-3] on page 525 $J_{\ell E} = 0.000052 \times 3 = 0.000156$ kg·m^2
④Determining a type	Determining a right angle hollow bore, right angle shaft, or parallel shaft	Decide on the MINI series F2 type F2S (right angle hollow bore) for mounting on the shaft.

Select a model that meets the values calculated based on selection steps ① to ④ for each category.

	Category	
Calculation Result	Reduction Ratio	1/80
	Torque Calculation From the Performance Table, select a model with $T_{LE} \leq$ allowable output shaft torque (T_A).	11.25 N·m
		Select the model F2SM-12-80-T40, which meets the torque ($T_{LE} \leq T_A$).
	Inertia Calculation Based on [Table-1] on page 525, select a model that meets the condition of equivalent inertia ≤ allowable inertia.	0.000156 kg·m^2 Select a model that meets $J_{\ell E} \leq$ allowable moment of inertia J:
		Select the model F2SM-15-80-T60, which meets the inertia.
Overall Verdict	Select a model that meets all conditions based on the torque and the inertia.	**Decide on F2SM-15-80-T60.** For the torque arm, option part number TAF2S-15 is recommended. Refer to page 1006. If the customer wishes to produce their own torque arm, the distance r from the center of the output shaft to the detent is $r \geq \frac{\text{Actual load torque} \times 1000}{\text{Allowable O.H.L.} - \text{Product Weight}} = \frac{11.25 \times 1000}{1274 - 9.8 \times 4} = 9.1$ Design it to 9.1 mm or more. * Refer to page 1003 for the equation for calculating the torque arm.

Selection Examples Gearmotors (with Motor)

Application ..... Conveyor (light shock load)
Conveyor speed ..... 10 m/min
Carrying weight ..... 40 kg
Connection method ..... Chain (located in the center of the shaft)
Operation time ..... 12 hours/day
Number of startups and stops ... 720 times/day
Power source frequency ..... 60 Hz region
Friction coefficient ..... 0.2 (estimated)

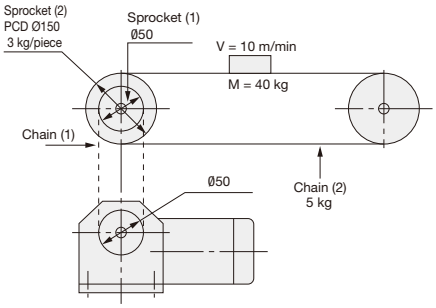

The chain (1), the sprocket (1), and other conditions shall not be included in this calculation.

Please utilize the calculation and selection tool on our website.
(https://sentei.nissei-gtr.co.jp/english/calculation)
You may calculate the necessary power by inputting the usage conditions and the series on our website.

Selection Process Steps		Selection Examples
①Determining the reduction ratio	Determining the reduction ratio (i) $i = \frac{\text{Required Speed of Output Shaft}}{1600\ \text{(estimated)}}$	Required Speed of Conveyor Shaft = $\frac{10 \times 1000}{150 \times \pi} \approx 21.2$ r/min Since the diameter of the sprocket for the conveyor shaft and that of the gearbox output shaft are the same: $i = \frac{21.2}{1600} \approx \frac{1}{75}$ $i = \frac{1}{80}$ (Note: The speed of the motor varies between the synchronous speed and the rated speed, depending on the level of the load.)
②Calculating the torque	Calculating the actual load torque (T_L)	$T_L = 9.8 \times (40 + 3 \times 2 + 5) \times 0.2 \times \frac{150}{2 \times 1000} = 7.5$ N·m
	With use of the service factor (Sf) in [Table 1] on page 500, calculating the equivalent output torque (T_{LE})	Using the service factor (Sf), adjust the actual load torque (T_L).
	$T_{LE} = T_L \times Sf$	$T_{LE} = 7.5 \times 1.25 \approx 9.4$ N·m
③Calculating the inertia	Calculating the actual inertial load	Calculating the actual load's moment of inertia (J_L) $J_L = \{40 \times (\frac{0.15}{2})^2\} + \{\frac{1}{2} \times 3 \times (\frac{0.15}{2})^2 \times 2\} + \{5 \times (\frac{0.15}{2})^2\}$ $= 0.27$ kg·m^2
	Calculating the inertial load on the motor shaft	Converting J_L into the motor shaft equivalent (J_ℓ) $J_\ell = J_L \times (i)^2$ $J_\ell = 0.27 \times (\frac{1}{80})^2$ ≈ 0.000042 kg·m^2
	Calculating the equivalent inertia by correction based on operation conditions	Correction coefficient = 3 based on operation conditions
		Calculating the equivalent moment of inertia J ($J_{\ell E}$) $J_{\ell E} = J_\ell \times$ (Correction Coefficient) [Table-3] on page 525 $J_{\ell E} = 0.000042 \times 3 = 0.000126$ kg·m^2
	Based on [Table-1] on page 525, select a model that meets the condition of equivalent inertia ≤ allowable inertia.	Select a model that meets $J_{\ell E} \leq$ allowable moment of inertia J: HLM-18$\frac{L}{R}$-80-T60
④Verifying the O.H.L.	Determining the Coefficient K_1 based on [Table-1] on page 527 Determining the Coefficient K_2 based on [Table-2] on page 527	$K_1 = 1$ $K_2 = 1$
	$\text{O.H.L.} = \frac{T_{LE} \times K_1 \times K_2}{R}$ * R: Pitch circle radius of the sprocket etc. to be attached to the gearbox shaft	$\text{O.H.L.} = \frac{9.4 \times 1 \times 1}{\frac{50}{2 \times 1000}} = 376$ N * Please add values as needed if there are other factors that may affect the O.H.L. of the product, such as belt tension.
⑤Determining a type	Determining a right angle shaft or parallel shaft	Based on the mounting space, decide on the MINI series H type (right angle shaft).

Select a model that meets the values calculated based on selection steps ① to ⑤ for each category.

	Category	
Calculation Result	Reduction Ratio	1/80
	Torque Calculation From the Performance Table, select a model with $T_{LE} \leq$ allowable output shaft torque (T_A).	9.4 N·m
		Select the model HLM-15$\frac{L}{R}$-80-T40, which meets the torque ($T_{LE} \leq T_A$).
	Inertia Calculation Based on [Table-1] on page 525, select a model that meets the condition of equivalent inertia ≤ allowable inertia.	0.000126 kg·m^2 Select a model that meets $J_{\ell E} \leq$ allowable moment of inertia J:
		Select the model HLM-18$\frac{L}{R}$-80-T60, which meets the inertia.
	O.H.L. Verification From the Performance Table, select a model that meets O.H.L. ≤ allowable O.H.L.	376 N
		Select the model HLM-18$\frac{L}{R}$-80-T60, which meets the O.H.L. (O.H.L. ≤ allowable O.H.L.).
Overall Verdict	Select a model that meets all conditions based on the torque, the inertia, and the O.H.L.	**Decide on the HLM-18$\frac{L}{R}$-80-T60.**

Selection Examples Speed Control Gearmotors

Application ..... Conveyor (light shock load)
Conveyor speed ..... 2 to 10 m/min
Carrying weight ..... 20 kg
Connection method ..... Chain (located in the center of the shaft)
Operation time ..... 12 hours/day
Number of startups and stops ... 10 times/day
Power source frequency ..... 60 Hz region
Friction coefficient ..... 0.2 (estimated)

Please utilize the calculation and selection tool on our website.
(https://sentei.nissei-gtr.co.jp/english/calculation)
You may calculate the necessary power by inputting the usage conditions and the series on our website.

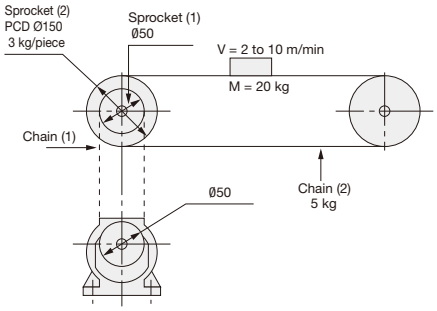

The chain (1), the sprocket (1), and other conditions shall not be included in this calculation.

Selection Process Steps		Selection Examples
①Determining the reduction ratio	Determining the reduction ratio (i) $i = \frac{\text{Required Speed of Output Shaft}}{1550\ \text{(estimated)}}$	Required Rotational Speed of Conveyor Shaft = $\frac{2 \times 1000}{150 \times \pi}$ to $\frac{10 \times 1000}{150 \times \pi}$ = 4.2 to 21.2 r/min The required speed of the gearbox shaft is also between 4.2 and 21.2 r/min. Using the higher speed, 21.2 r/min, calculate the reduction ratio i. $i = \frac{21.2}{1550} \approx \frac{1}{73}$ (*The value is "1300" at 50 Hz.) Choose the closest value which is matching between calculation($i = \frac{1}{73}$) and standard model lineup. In this case it is $i = \frac{1}{60}$. Reduction ratio $i = \frac{1}{60}$
②Calculating the torque	Calculating the actual load torque (T_L) With use of the service factor (Sf) in [Table-1] on page 500, calculating the equivalent output torque (T_{LE}) $T_{LE}=T_L \times Sf$ From the Performance Table, select a model with $T_{LE} \leq$ allowable output shaft torque (T_A). [Figure-1] 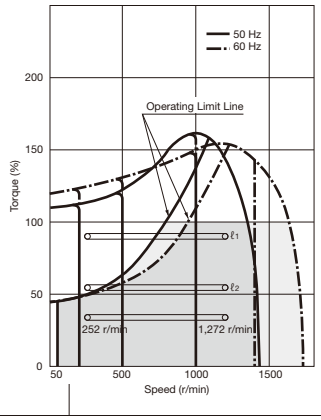	$T_L = 9.8 \times (20 + 3 \times 2 + 5) \times 0.2 \times \frac{150}{2 \times 1000} = 4.6$ N·m Using the service factor (Sf), correct the actual load torque (T_L). $T_{LE} = 4.6 \times 1.25 \approx 5.8$ N·m $T_{LE} \leq T_A$ and based on the load torque T = 5.8 N·m and the reduction ratio $i = \frac{1}{60}$, select one of the following: GLP-12-60-S25 GLP-15-60-S40 GLP-15-60-S60. When the speed of the motor shaft is calculated, the maximum speed is 21.2 × 60 = 1272 r/min, and the minimum speed is 4.2 × 60 = 252 r/min. Confirm that the torque load factor is under the operating limit line. [Figure-1] Considering the torque load factor of GLP-12-60-S25: $\frac{5.8}{6.66} \times 100 = 87$ % (ℓ_1) GLP-15-60-S40: $\frac{5.8}{10.8} \times 100 = 54$ % (ℓ_2) GLP-15-60-S60: $\frac{5.8}{16.7} \times 100 = 35$ % (ℓ_3) Based on the abovementioned values, select GLP-15-60-S60.

Selection Process Steps and Examples

Selection Process Steps		Selection Examples
③Calculating the inertia	Calculating the actual inertial load	Calculating the actual load's moment of inertia (J_L) $J_L = \{20 \times (\frac{0.15}{2})^2\} + \{\frac{1}{2} \times 3 \times (\frac{0.15}{2})^2 \times 2\} + \{5 \times (\frac{0.15}{2})^2\}$ $= 0.16$ kg·m^2
	Calculating the inertial load on the motor shaft	Converting J_L into the motor shaft equivalent (J_ℓ) $J_\ell = J_L \times (i)^2$ $J_\ell = 0.16 \times (\frac{1}{60})^2$ ≈ 0.000044 kg·m^2
	Calculating the equivalent inertia by correction based on operation conditions	Correction coefficient = 2 based on operation conditions
		Calculating the equivalent moment of inertia J ($J_{\ell E}$) $J_{\ell E} = J_\ell \times$ (Correction Coefficient) [Table-3] on page 525 $J_{\ell E} = 0.000044 \times 2 = 0.000088$ kg·m^2
④Verifying the O.H.L.	Determining the Coefficient K_1 based on [Table-1] on page 527 Determining the Coefficient K_2 based on [Table-2] on page 527	$K_1=1$ $K_2=1$
	O.H.L.= $\frac{T_{LE} \times K_1 \times K_2}{R}$ * R: Pitch circle radius of the sprocket etc. attached to the gearbox shaft	O.H.L.= $\frac{5.8 \times 1 \times 1}{\frac{50}{2 \times 1000}}$ =232 N * Please add values as needed if there are other factors that may affect the O.H.L. of the product, such as belt tension.
⑤Determining a type	Determining a right angle shaft or parallel shaft	Based on the mounting space, decide on the MINI series G type (parallel shaft).

Select a model that meets the values calculated based on selection steps ① to ⑤ for each category.

	Category	
Calculation Result	Reduction Ratio	1/60
	Torque Calculation From the Performance Table, select a model with $T_{LE} \leq$ allowable output shaft torque (T_A).	5.8 N·m
		Select the model GLP-12-60-S25 and GLP-15-60-S40, or only GLP-15-60-S40. They meet the torque ($T_{LE} \leq T_A$). When the speed of the motor shaft is calculated, select GLP-15-60-S60.
	Inertia Calculation Based on [Table-1] on page 525, select a model that meets the condition of equivalent inertia ≤ allowable inertia.	0.000088 kg·m^2 Select a model that meets $J_{\ell E} \leq$ allowable moment of inertia J:
		Select the model GLP-12-60-S25, which meets the inertia.
	O.H.L. Verification From the Performance Table, select a model that meets O.H.L. ≤ allowable O.H.L.	232 N
		Select the model GLP-12-60-S25, which meets the O.H.L. (O.H.L. ≤ allowable O.H.L.).
Overall Verdict	Select a model that meets all conditions based on the torque, the inertia, and the O.H.L.	**Decide on GLP-15-60-S60.**

MID Series

Selection Examples In the case of foot mount

Application ..... Conveyor (light shock load)
Conveyor speed ..... 10 m/min
Carrying weight ..... 620 kg
Connection method ..... Chain (located in the center of the shaft)
Operation time ..... 12 hours/day
Number of startups and stops ... 720 times/day
Power source frequency ..... 60 Hz region
Friction coefficient ..... 0.2 (estimated)

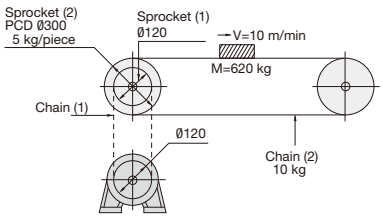

The chain (1), the sprocket (1), and other conditions shall not be included in this calculation.

Please utilize the calculation and selection tool on our website.
(https://sentei.nissei-gtr.co.jp/english/calculation)
You may calculate the necessary power by inputting the usage conditions and the series on our website.

Selection Process Steps		Selection Examples
①Selecting the reduction ratio	Determining the reduction ratio (i) $i = \frac{\text{Required Speed of Output Shaft}}{\text{Power Source Frequency} \times 30}$	Required Speed of Conveyor Shaft = $\frac{10 \times 1000}{300 \times \pi} \approx 10.6$ r/min Since the diameter of the sprocket for the conveyor shaft and that of the gearbox output shaft are the same: $i = \frac{10.6}{60 \times 30} \approx \frac{1}{160}$
②Calculating the torque	Calculating the actual load torque (T_L)	$T_L = 9.8 \times (620 + 2 \times 5 + 10) \times 0.2 \times \frac{300}{2 \times 1000} = 188$ N·m
	With use of the service factor (Sf) in [Table-1] on page 500, calculating the equivalent output torque (T_{LE})	Using the service factor (Sf), adjust the actual load torque (T_L).
	$T_{LE} = T_L \times Sf$	$T_{LE} = 188 \times 1.25 = 235$ N·m
③Calculating the inertia	Calculating the actual inertial load	Calculating the actual load's moment of inertia (J_L) $J_L = \{620 \times (\frac{0.3}{2})^2\} + \{\frac{1}{2} \times 5 \times (\frac{0.3}{2})^2 \times 2\} + \{10 \times (\frac{0.3}{2})^2\}$ $= 14.29$ kg·m²
	Calculating the inertial load on the motor shaft	Converting J_L into the motor shaft equivalent (J_ℓ) $J_\ell = J_L \times (i)^2$ $J_\ell = 14.29 \times (\frac{1}{160})^2$ ≈ 0.000558 kg·m²
	Calculating the equivalent inertia by correction based on operation conditions	Correction coefficient = 3 based on operation conditions
		Calculating the equivalent moment of inertia J ($J_{\ell E}$) $J_{\ell E} = J_\ell \times$ (Correction Coefficient)[Table-3] on page 525 $J_{\ell E} = 0.000558 \times 3 = 0.001674$ kg·m²
④Verifying the O.H.L.	Determining the Coefficient K_1 based on [Table-1] on page 527 Determining the Coefficient K_2 based on [Table-2] on page 527	$K_1 = 1$ $K_2 = 1$
	O.H.L.= $\frac{T_{LE} \times K_1 \times K_2}{R}$ * R: Pitch circle radius of the sprocket etc. attached to the gearbox shaft	O.H.L.= $\frac{235 \times 1 \times 1}{\frac{120}{2 \times 1000}} = 3917$ N * Please add values as needed if there are other factors that may affect the O.H.L. of the product, such as belt tension.
⑤Determining a type	Determining a parallel shaft, right angle shaft, or right angle hollow bore	Based on the mounting space, decide on a parallel shaft (G3 Type).

Select a model that meets the values calculated based on selection steps ① to ⑤ for each category.

	Category	
Calculation Result	Reduction Ratio	$\frac{1}{160}$
	Torque Calculation From the Performance Table, select a model with $T_{LE} \leq$ allowable output shaft torque (T_A).	235 N·m
		Select the model G3L32N160-MM04TNNTN, which meets the torque ($T_{LE} \leq T_A$).
	Inertia Calculation Based on [Table-2] on page 525, select a model that meets the condition of equivalent inertia ≤ allowable inertia.	0.001674 kg·m² Select a model that meets $J_{\ell E} \leq$ allowable moment of inertia J:
		Select the model G3L40N160-MR08TNNTN, which meets the inertia.
	O.H.L. Verification From the Performance Table, select a model that meets O.H.L. ≤ allowable O.H.L.	3917 N
		Select the model G3L32N160-MM04TNNTN, which meets the O.H.L. (O.H.L. ≤ allowable O.H.L.).
Overall Verdict	Select a model that meets all conditions based on the torque, the inertia, and the O.H.L.	**Decide on the G3L40N160-MR08TNNTN.**

Selection Examples In the case of shaft mount

Application ..... Conveyor (light shock load)
Conveyor speed ..... 30 m/min
Carrying weight ..... 100 kg
Connection method ..... Chain
Operation time ..... 12 hours/day
Number of startups and stops ... 720 times/day
Power source frequency ..... 60 Hz region
Friction coefficient ..... 0.2 (estimated)

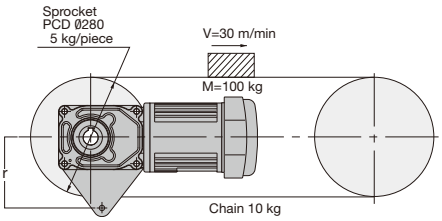

Conditions other than those shown in the selection process steps shall not be included in this calculation.

Please utilize the calculation and selection tool on our website.
(https://sentei.nissei-gtr.co.jp/english/calculation)
You may calculate the necessary power by inputting the usage conditions and the series on our website.

Selection Process Steps		Selection Examples
①Selecting the reduction ratio	Determining the reduction ratio (i) $i = \frac{\text{Required Speed of Output Shaft}}{\text{Power Source Frequency} \times 30}$	Required Speed of Conveyor Shaft = $\frac{30 \times 1000}{280 \times \pi} \approx 34.1$ r/min Since the speed of the conveyor shaft and that of the gearbox output shaft are the same: $i = \frac{34.1}{60 \times 30} \approx \frac{1}{50}$
②Calculating the torque	Calculating the actual load torque (T_L)	$T_L = 9.8 \times (100 + 2 \times 5 + 10) \times 0.2 \times \frac{280}{2 \times 1000} = 32.9$ N·m
	With use of the service factor (Sf) in [Table-1] on page 500, calculating the equivalent output torque (T_{LE}) $T_{LE} = T_L \times Sf$	Using the service factor (Sf), adjust the actual load torque (T_L). $T_{LE} = 32.9 \times 1.25 = 41.1$ N·m
③Calculating the inertia	Calculating the actual inertial load	Calculating the actual load's moment of inertia (J_L) $J_L = \{100 \times (\frac{0.28}{2})^2\} + \{\frac{1}{2} \times 5 \times (\frac{0.28}{2})^2 \times 2\} + \{10 \times (\frac{0.28}{2})^2\}$ $= 2.25$ kg·m^2
	Calculating the inertial load on the motor shaft	Converting J_L into the motor shaft equivalent (J_ℓ) $J_\ell = J_L \times (i)^2$ $J_\ell = 2.25 \times (\frac{1}{50})^2$ $= 0.0009$ kg·m^2
	Calculating the equivalent inertia by correction based on operation conditions	Correction coefficient = 3 based on operation conditions
		Calculating the equivalent moment of inertia J ($J_{\ell E}$) $J_{\ell E} = J_\ell \times$ (Correction Coefficient) [Table-3] on page 525 $J_{\ell E} = 0.0009 \times 3 = 0.0027$ kg·m^2
④Determining a type	Determining a parallel shaft, right angle shaft, or right angle hollow bore	Decide on the MID series F3 type F3S (right angle hollow bore) for mounting on the shaft.

Select a model that meets the values calculated based on selection steps ① to ④ for each category.

	Category	
Calculation Result	Reduction Ratio	$\frac{1}{50}$
	Torque Calculation From the Performance Table, select a model with $T_{LE} \leq$ allowable output shaft torque (T_A).	41.1 N·m Select the model F3S25N50-MM02TNNTN, which meets the torque ($T_{LE} \leq T_A$).
	Inertia Calculation Based on [Table-2] on page 525, select a model that meets the condition of equivalent inertia ≤ allowable inertia.	0.0027 kg·m^2 Select a model that meets $J_{\ell E} \leq$ allowable moment of inertia J: Select the model F3S35N50-MR08TNNTN, which meets the inertia.
Overall Verdict	Select a model that meets all conditions based on the torque and the inertia.	**Decide on the F3S35N50-MR08TNNTN.** For the torque arm, option part number TAF3S-35 is recommended. Refer to page 1007. Moreover, if the customer wishes to produce a torque arm, the distance r from the center of the output shaft to the detent is $r \geq \frac{\text{Actual load torque} \times 1000}{\text{Allowable O.H.L.} - \text{Product Weight}} = \frac{41.1 \times 1000}{3480 - 9.8 \times 21} = 12.6$ Design it to 12.4 mm or more. * For the equation for calculating the torque arm, refer to page 1003.

Service Factor (Sf)

The gearmotor and the gearbox are designed under the condition of operation for ten hours/day under a light shock load. If you will use them under a condition of a longer operation time and a heavy shock load, adjust the load torque based on the service factor shown in the table below.

[Table-1]

Load Condition	Service Factor (Sf)			Application Example
	Operating for less than 3 hours/day	Operating for 3 to 10 hours/day	Operating for more than 10 hours/day	
Uniform load	1	1	1	Conveyors (uniform load), screens, agitators (low viscosity), water treatment machines (light load), machine tools (feed shafts), elevators, extruders, distillers
Light shock load	1	1	1.25	Conveyors (nonuniform or heavy load), agitators (high viscosity), machines for vehicles, water treatment machines (moderate load), hoists (light load), paper mills, feeders, food machines, pumps, sugar making machines, textile machines
Heavy shock load	1	1.25	1.5	Hoists (heavy load), hammer mills, metal working machines, crushers, tumblers

Allowable Moment of Inertia J

If a gearmotor with a high load inertia is intermittently operated, high torque may occur upon starting (or when stopping if the product is provided with a brake), resulting in an unexpected accident. To prevent such occurrence, set the level of the inertia of the application to be within the allowable value shown in the table below based on the connection method and the frequency of startup.

■ Allowable moment of inertia J by motor power

(Motor shaft equivalent or input shaft equivalent)

MINI Series

Unit: Moment of Inertia J (kg·m²) [Table-1]

G Type	H Type	F2 Type		Allowable Moment of Inertia J
G-12 Frame G-22 Frame (15 W, 25 W, 40 W, 60 W)	H-15 Frame H-22 Frame (15 W, 25 W, 40 W, 60 W)	F2S-12 Frame	F2F-15 Frame	0.0001
G-15 Frame G-28 Frame G-32 Frame	H-18 Frame H-28 Frame H-32 Frame	F2S-15 Frame	F2F-18 Frame	0.0002
G-18 Frame G-40 Frame	H-40 Frame	–	–	0.0006

Note 1: Motor shaft (input shaft) equivalent moment of inertia J = output shaft moment of inertia J × (reduction ratio)²
(Example: 1/400 when the reduction ratio is 1/20)

MID Series

Unit: Moment of Inertia J (kg·m²) [Table-2]

3-Phase	1-Phase	Allowable Moment of Inertia J
0.1 kW	0.1 kW	0.0008
0.2 kW	0.2 kW	0.0010
0.4 kW	0.4 kW	0.0015
0.75 kW	–	0.0030
1.5 kW	–	0.0050
2.2 kW	–	0.0070

Note 1: When using a gearbox at an input speed of 1800 r/min or more, the value calculated by multiplying the abovementioned value by (1800/input r/min)² is the allowable moment of inertia J.
(Example: When the input shaft r/min is 3600, the allowable moment of inertia is 1/4.)
Note 2: Motor shaft (input shaft) equivalent moment of inertia J = output shaft moment of inertia J × (reduction ratio)²
(Example: 1/400 when the reduction ratio is 1/20)

■ Correction coefficient of allowable moment of inertia J according to operating conditions

[Table-3]

Connection Method	Frequency of Startup	Correction Coefficient
When direct coupling or without any loosening.	70 times/day or below	1
	More than 70 times/day	1.5
When there is loosening due to chain fastening.	70 times/day or below	2
	More than 70 times/day	3

Method for Calculating the Moment of Inertia J

■ Rotor's moment of inertia J

When the center of rotation is aligned with the center of gravity		When the center of rotation is not aligned with the center of gravity	
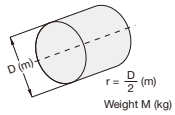	$J = \frac{1}{2} Mr^2$ (kg·m²)	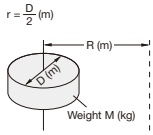	$J = \frac{1}{2} Mr^2 + MR^2$ (kg·m²)
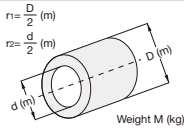	$J = \frac{1}{2} M (r_1^2 + r_2^2)$ (kg·m²)	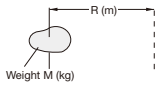	(When the size is negligible) $J = MR^2$ (kg·m²)

■ Moment of inertia J in case of linear motion

General case	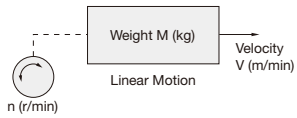	$J = \frac{1}{4} M \cdot \left(\frac{V}{\pi \cdot n}\right)^2$ (kg·m²)
In the case of horizontal linear motion (When moving an object with a lead screw)	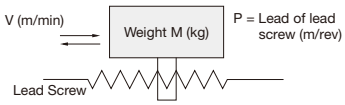	$J = \frac{1}{4} M \cdot \left(\frac{P}{\pi}\right)^2 = \frac{1}{4} M \cdot \left(\frac{V}{\pi \cdot n}\right)^2$ (kg·m²)
In the case of horizontal linear motion (Conveyor etc.)	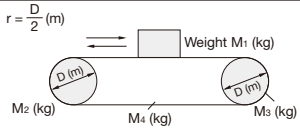	$J = M_1 r^2 + \frac{1}{2} M_2 r^2 + \frac{1}{2} M_3 r^2 + M_4 r^2$ (kg·m²)
In the case of vertical linear motion (Crane, winch, etc.)	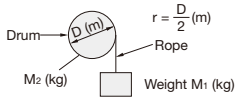	$J = M_1 r^2 + \frac{1}{2} M_2 r^2$ (kg·m²)

■ Conversion of the moment of inertia when the speed ratio is available

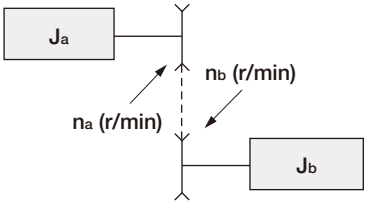

Convert the load's moment of inertia J_b into the equivalent value on the n_a shaft.

$$J = J_a + \left(\frac{n_b}{n_a}\right)^2 \times J_b$$

Overhung Load (O.H.L.)

An overhung load (O.H.L.) is a suspending load imposed on a shaft. When a chain, belt, gear, etc. is used to couple the gearbox shaft with the application, the resulting O.H.L. must be taken into consideration.

$$\text{O.H.L.} = \frac{T_{LE} \times K_1 \times K_2}{R} \quad \text{(N)}$$

- T_{LE} : Equivalent output torque acting on the gearbox shaft (N·m)
- R : Pitch circle radius of the sprocket, pulley, gear, etc. to be attached to gearbox shaft (m)
- K_1 : Refer to the coefficient for the connection method [Table-1].
- K_2 : Refer to the coefficient for the load point [Table-2].

■ Coefficient K_1

[Table-1]

Connection method	K_1
Chain, timing belt	1.00
Gear	1.25
V Belt	1.50

■ Coefficient K_2

[Table-2]

Load Point	K_2
Base of the shaft	0.75
Middle of the shaft	1.00
End of Output Shaft	1.50

<Load Point>

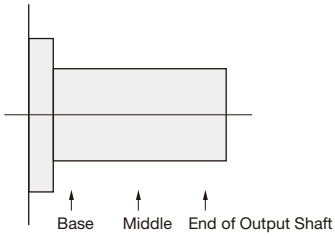

Thrust Load

The allowable thrust load values of right angle hollow bore models are listed in the performance table.
For other models, please contact your nearest Sales Office or the CS Center.

Overhung Load (O.H.L.)

MINI Series <Right Angle Hollow Bore/F2S Type>

■ In the case of flange mount

(1) Load point of O.H.L.
The load point of the allowable O.H.L. is calculated to be 10 mm from the end of the output shaft.

(2)-1 Correcting the O.H.L. when one end of the output shaft is not borne by a pillow
If the load point L of the O.H.L. is more than 10 mm, please correct using the following formula:

$$\text{Corrected O.H.L. (N)} = \frac{A+10}{A+L} \times \text{Allowable O.H.L. (N)}$$

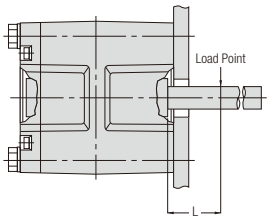

(2)-2 Correcting the O.H.L. when one end of the output shaft is borne by a pillow

Please correct using the following formula:

$$\text{Corrected O.H.L. (N)} = \frac{S}{S-L} \times \text{Allowable O.H.L. (N)}$$

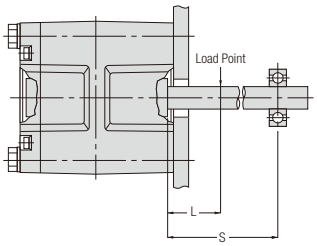

■ Constant A

Frame Size	A (mm)
12	43
15	55

■ In the case of shaft mount

If the customer chooses to to produce a torque arm of their own

● In case of using the torque arm as shown in [Figure-1]

the distance r from the center of the output shaft to the detent can be calculated with the following formulas:

SI Units

$$r\ (\text{mm}) \geq \frac{\text{Actual load torque (N·m)} \times 1000}{\text{Allowable O.H.L. (N)} - 9.8 \times \text{Gearmotors Weight (kg)}}$$

● In case of using the torque arm as shown in [Figure-2]

the distance r from the center of the output shaft to the detent can be calculated with the following formulas:

SI Units

$$r\ (\text{mm}) \geq \frac{\text{Actual load torque (N·m)} \times (A + M) \times 1000}{\{\text{Allowable O.H.L. (N)} - 9.8 \times \text{Gearmotors Weight (kg)}\} \times (A + 10)}$$

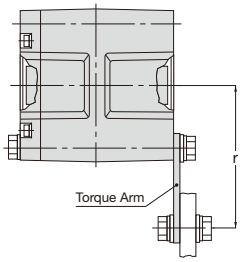

[Figure-1]

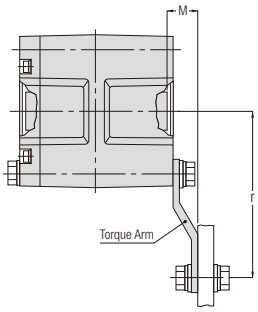

[Figure-2]

■ Constant A

Frame Size	A (mm)
12	43
15	55

Note: For the plate thickness of the torque arm, see “Torque Arms (Optional)” on page 1006.

MID Series <Right Angle Hollow Bore/FS Type>

■ In the case of flange mount

(1) Load point of O.H.L.
The load point of the allowable O.H.L. is calculated to be 20 mm from the end of the output shaft.

(2)-1 Correcting the O.H.L. when one end of the output shaft is not borne by a pillow
If the load point L of the O.H.L. is more than 20 mm, Please correct using the following formula:

$$\text{Corrected O.H.L. (N)} = \frac{A+20}{A+L} \times \text{Allowable O.H.L. (N)}$$

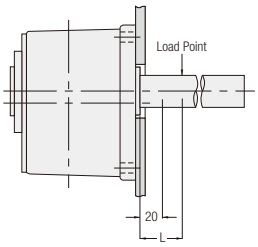

■ Constant A

Frame Size	A (mm)
25	84.5
30	91
35	98
45	113
55	150

(2)-2 Correcting the O.H.L. when one end of the output shaft is borne by a pillow

Please correct using the following formula:

$$\text{Corrected O.H.L. (N)} = \frac{S}{S-L} \times \text{Allowable O.H.L. (N)}$$

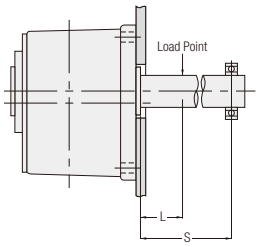

MID Series <Concentric Right Angle Hollow Bore/F3S Type>

■ In the case of flange mount

(1) Load point of O.H.L.
The load point of the allowable O.H.L. is calculated to be 20 mm from the end of the output shaft.

(2)-1 Correcting the O.H.L. when one end of the output shaft is not borne by a pillow
If the load point L of the O.H.L. is more than 20 mm, please correct using the following formula:

$$\text{Corrected O.H.L. (N)} = \frac{A+20}{A+L} \times \text{Allowable O.H.L. (N)}$$

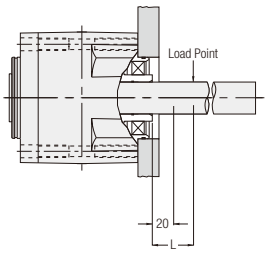

■ Constant A

Frame Size	A (mm)
20	73.5
25	90.5
30	98
35	114
45	136

(2)-2 Correcting the O.H.L. when one end of the output shaft is borne by a pillow

Please correct using the following formula:

$$\text{Corrected O.H.L. (N)} = \frac{S}{S-L} \times \text{Allowable O.H.L. (N)}$$

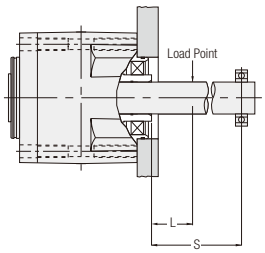

Material for Calculating Gearmotors with Brake and Gearmotors with Clutch/Brake

		Notes
Braking Time·Connection Time of Clutch (t_{tb})	$t_{tb}=t_{ab}+t_a$ (s) $t_{ab}=\dfrac{(J_r+J_\ell)\times n}{9.55\times(Td\pm T\ell)}$ (s)	Note 1: When the load torque becomes negative in, for example, hoisting down, Tℓ will be "-Tℓ." Note 2: With regard to "+ and -" signs, "-" will be given to the clutch, and "+" will be given to the brake.
Connection Work Load (E)	Connection work load of the brake and the clutch per operation $E=\dfrac{(J_r+J_\ell)\times n^2}{183}\times\dfrac{Td}{Td\pm T\ell}$ (J)	Note 1: When the load torque becomes negative in, for example, hoisting down, Tℓ will be "-Tℓ." Note 2: With regard to "+ and -" signs, "-" will be given to the clutch, and "+" will be given to the brake.
Service Life	Since the service life of the brake lining varies depending on the surface pressure, temperature, slip speed, etc., it cannot be accurately calculated. However, an approximate number of lifetime brake cycles can be estimated using the following formula: $Z=\dfrac{Emax}{E}$ [Number of brake cycles]	

【Explanation of Codes】

t_a ····· Braking Delay Time ····· [Tables-1 and -2] on page 569
Armature suction time of a gearmotors with clutch/brake ····· [Table-2] on page 539

J_r ····· In the case of gearmotors with brake and IP65 gearmotors with brake ····· [Tables-3 and -4] on page 532
In the case of gearmotors with clutch/brake ····· [Table-5] on page 532

J_ℓ ····· Load's moment of inertia J converted into the equivalent value on the motor shaft or gearbox input shaft (kg·m^2)

n ····· Speed of the clutch shaft or brake shaft (r/min)

Td ····· Rated Torque and dynamic friction torque to the relative speed of the clutch and the brake (N·m)
In the case of gearmotors with brake and IP65 gearmotors with brake ····· [Tables-1 and -2] on page 538, [Table-1] on page 539
In the case of gearmotors with clutch/brake ····· [Table-2] on page 539

Tℓ ····· Load torque converted into the equivalent value on the gearbox input shaft (N·m)

Emax ····· Allowable work load of the clutch and the brake
In the case of gearmotors with brake and IP65 gearmotors with brake ····· [Table-2] on page 538, [Table-1] on page 539
In the case of gearmotors with clutch/brake ····· [Table-2] on page 539

Moment of Inertia of the Gearmotors

MINI Series

■ Moment of inertia J of the gearmotors (motor + gearbox) by power and by frame size

<Motor shaft equivalent>

Unit: Moment of Inertia J (kg·m²) [Table-1]

Number of Phases	Type/Frame Size				Power (W)	Gearmotor/IP65 Gearmotor		Gearmotor with Brake/ IP65 Gearmotor with Brake	
	G Type	H Type	F2 Type			200 V	400 V	200 V	400 V
3-Phase	G-12 Frame G-22 Frame	H-15 Frame H-22 Frame	F2S-12 Frame	F2F-15 Frame	15	0.00005	0.00006	0.00007	0.00008
					25	0.00006	0.00006	0.00008	0.00008
					40	0.00007	0.00008	0.00009	0.00009
					60	0.00008	0.00008	0.00009	0.00009
	G-15 Frame G-28 Frame G-32 Frame	H-18 Frame H-28 Frame H-32 Frame	F2S-15 Frame	F2F-18 Frame	25	0.00008	0.00008	0.00010	0.00010
					40	0.00008	0.00008	0.00010	0.00010
					60	0.00010	0.00012	0.00012	0.00014
					90	0.00012	0.00013	0.00014	0.00014
	G-18 Frame G-40 Frame	H-40 Frame	-	-	40	0.00034	0.00034	0.00036	0.00036
					60	0.00034	0.00034	0.00036	0.00036
					90	0.00034	0.00034	0.00036	0.00036

Note: IP65 gearmotors and IP65 gearmotors with a brake are not available for 400 V.

Unit: Moment of Inertia J (kg·m²) [Table-2]

Number of Phases	Type/Frame Size				Power (W)	Gearmotor/IP65 Gearmotor		Gearmotor with Brake/ IP65 Gearmotor with Brake	
	G Type	H Type	F2 Type			100 V	200 V	100 V	200 V
1-Phase	G-12 Frame G-22 Frame	H-15 Frame H-22 Frame	F2S-12 Frame	F2F-15 Frame	15	0.00005	0.00005	0.00007	0.00007
					25	0.00006	0.00006	0.00008	0.00008
					40	0.00008	0.00008	0.00009	0.00009
					60	0.00008	0.00008	0.00009	0.00009
	G-15 Frame G-28 Frame G-32 Frame	H-18 Frame H-28 Frame H-32 Frame	F2S-15 Frame	F2F-18 Frame	25	0.00008	0.00008	0.00010	0.00010
					40	0.00010	0.00010	0.00012	0.00012
					60	0.00013	0.00013	0.00014	0.00014
					90	0.00013	0.00013	0.00014	0.00014
	G-18 Frame G-40 Frame	H-40 Frame	-	-	40	0.00034	0.00034	0.00036	0.00036
					60	0.00034	0.00034	0.00036	0.00036
					90	0.00035	0.00035	0.00036	0.00036

Note: IP65 gearmotors and IP65 gearmotors with a brake are not available for 200 V.

MID Series

■ Moment of inertia J of the gearmotors/IP65 gearmotors (motor + gearbox)

<Motor shaft equivalent, common to each reduction ratio> [Table-1]

Motor Power	3-Phase 0.1 kW	3-Phase 0.2 kW	3-Phase 0.4 kW	3-Phase 0.75 kW	3-Phase 1.5 kW	3-Phase 2.2 kW
Moment of Inertia J (kg·m²)	0.00048	0.00053	0.0011	0.0024	0.0062	0.0105

[Table-2]

Motor Power	1-Phase 0.1 kW (H2, F, and F3 Type)	1-Phase 0.1 kW (G3 Type)	1-Phase 0.2 kW	1-Phase 0.4 kW
Moment of Inertia J (kg·m²)	0.00046 (Note 1)	0.00080	0.00091	0.00271

Note 1: The values are those obtained with the capacitor in operation.

■ Moment of inertia J of the gearmotors with brake/IP65 gearmotor (motor + gearbox)

<Motor shaft equivalent, common to each reduction ratio> [Table-3]

Motor Power	3-Phase 0.1 kW	3-Phase 0.2 kW	3-Phase 0.4 kW	3-Phase 0.75 kW	3-Phase 1.5 kW	3-Phase 2.2 kW
Moment of Inertia J (kg·m²)	0.00054	0.00076	0.0012	0.0029	0.0067	0.0109

Note: IP65 gearmotors with a brake are not available for 1.5 kW and 2.2 kW.

[Table-4]

Motor Power	1-Phase 0.1 kW (H2, F, and F3 Type)	1-Phase 0.1 kW (G3 Type)	1-Phase 0.2 kW	1-Phase 0.4 kW
Moment of Inertia J (kg·m²)	0.00070 (Note 1)	0.00103	0.00115	0.0030

Note 1: The values are those obtained with the capacitor in operation.

■ Moment of inertia J of the gearmotors with clutch/brake (clutch/brake + gearbox)

<Motor shaft equivalent> [Table-5]

Motor Power	3-Phase 0.1 kW	3-Phase 0.2 kW	3-Phase 0.4 kW	3-Phase 0.75 kW
Moment of Inertia J (kg·m²)	0.00035	0.00035	0.0085	0.0011

■ Moment of inertia J of the gearbox (double shaft type)

<Input shaft equivalent> [Table-6]

4 Poles Motor Power Class	0.1 kW	0.2 kW	0.4 kW	0.75 kW	1.5 kW	2.2 kW
Moment of Inertia J (kg·m²)	0.000006	0.000007	0.000017	0.00006	0.00018	0.0003

■ Moment of inertia J of the S-type gearbox (double shaft type)

<Input shaft equivalent> [Table-7]

4 Poles Motor Power Class	0.1 kW	0.2 kW	0.4 kW	0.75 kW	1.5 kW	2.2 kW
Moment of Inertia J (kg·m²)	0.000023	0.000025	0.00003	0.000073	0.00019	0.0004

Structural Drawings

MINI Series <G Type>

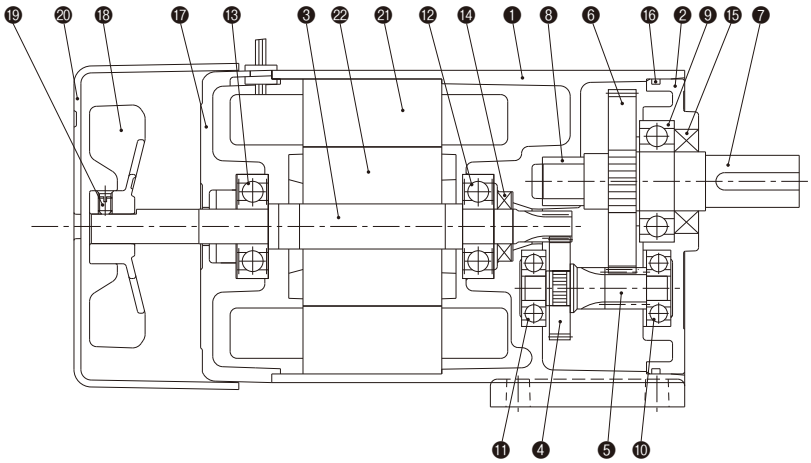

❶ Case	❻ Output Shaft Gear	⓫ Bearing	⓰ O-ring	㉑ Stator
❷ Case Cover	❼ Output Shaft	⓬ Bearing	⓱ Motor Bracket	㉒ Rotor
❸ Input Shaft	❽ Metal Bearing	⓭ Bearing	⓲ Fan	
❹ 1 Stage Gear	❾ Bearing	⓮ Oil Seal	⓳ Set Screw	
❺ 1 Stage Pinion	❿ Bearing	⓯ Oil Seal	⓴ Fan Cover	

MINI Series <F2F Type>

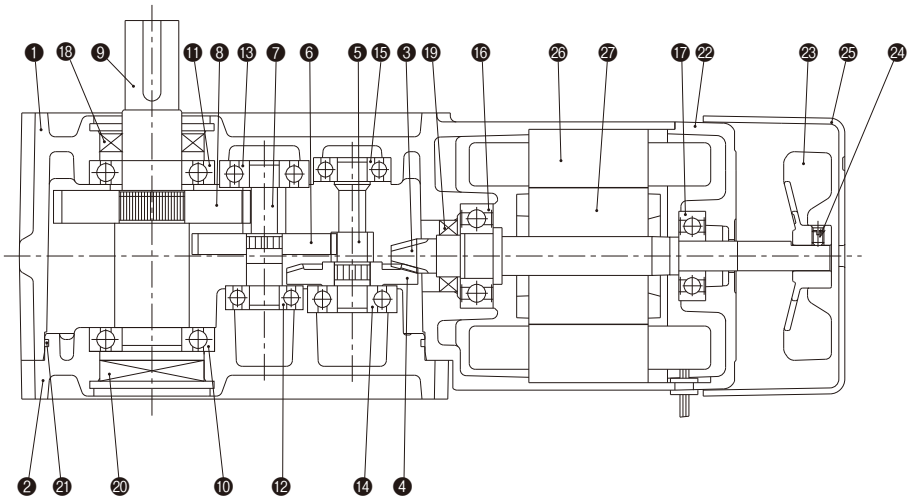

❶ Case	❻ 2 Stage Gear	⓫ Bearing	⓰ Bearing	㉑ O-ring	㉖ Stator
❷ Case Cover	❼ 2 Stage Pinion	⓬ Bearing	⓱ Bearing	㉒ Motor Bracket	㉗ Rotor
❸ Input Shaft	❽ Output Shaft Gear	⓭ Bearing	⓲ Oil Seal	㉓ Fan	
❹ 1 Stage Gear	❾ Output Shaft	⓮ Bearing	⓳ Oil Seal	㉔ Set Screw	
❺ 1 Stage Pinion	❿ Bearing	⓯ Bearing	⓴ Seal Cap	㉕ Fan Cover	

MINI Series <F2S Type>

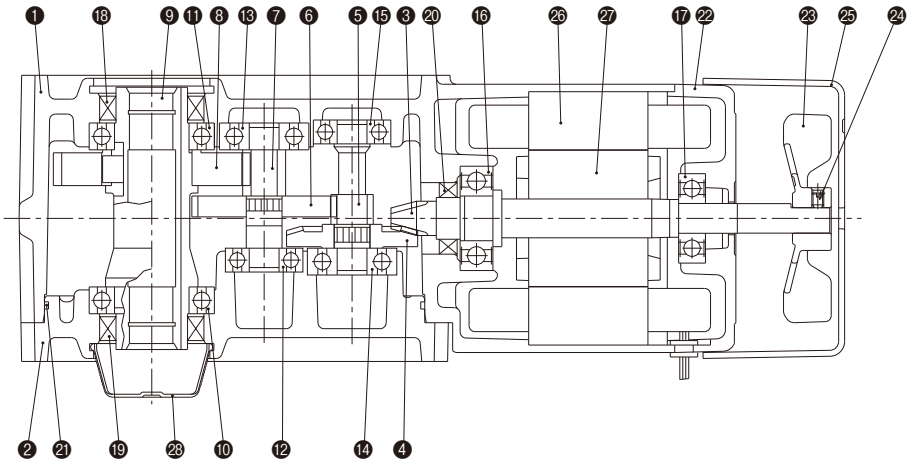

❶ Case	❻ 2 Stage Gear	⓫ Bearing	⓰ Bearing	㉑ O-ring	㉖ Stator
❷ Case Cover	❼ 2 Stage Pinion	⓬ Bearing	⓱ Bearing	㉒ Motor Bracket	㉗ Rotor
❸ Input Shaft	❽ Output Shaft Gear	⓭ Bearing	⓲ Oil Seal	㉓ Fan	㉘ Safety Cap
❹ 1 Stage Gear	❾ Output Shaft	⓮ Bearing	⓳ Oil Seal	㉔ Set Screw	
❺ 1 Stage Pinion	❿ Bearing	⓯ Bearing	⓴ Oil Seal	㉕ Fan Cover	

MID Series 3-Phase <G3 Type/GA Type>

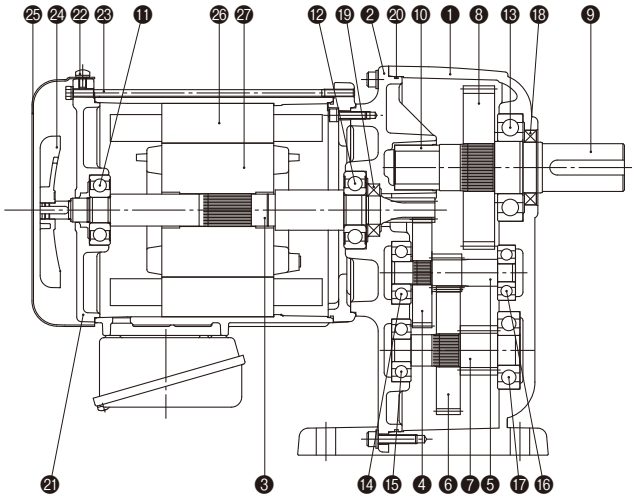

❶ Case	❻ 2 Stage Gear	⓫ Bearing	⓰ Bearing	㉑ Motor Bracket	㉖ Stator
❷ Bracket	❼ 2 Stage Pinion	⓬ Bearing	⓱ Bearing	㉒ Mounting Screw	㉗ Rotor
❸ Input Shaft	❽ Output Shaft Gear	⓭ Bearing	⓲ Oil Seal	㉓ Through Bolt	
❹ 1 Stage Gear	❾ Output Shaft	⓮ Bearing	⓳ Oil Seal	㉔ Fan	
❺ 1 Stage Pinion	❿ Metal Bearing	⓯ Bearing	⓴ O-ring	㉕ Fan Cover	

MID Series 1-Phase <G3/GA Type>

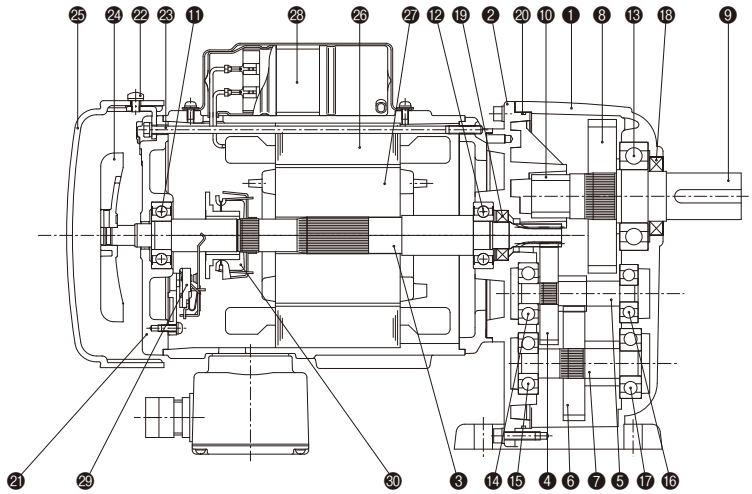

❶Case	❻2 Stage Gear	⓫Bearing	⓰Bearing	㉑Motor Bracket	㉖Stator
❷Bracket	❼2 Stage Pinion	⓬Bearing	⓱Bearing	㉒Mounting Screw	㉗Rotor
❸Input Shaft	❽Output Shaft Gear	⓭Bearing	⓲Oil Seal	㉓Through Bolt	㉘Capacitor
❹1 Stage Gear	❾Output Shaft	⓮Bearing	⓳Oil Seal	㉔Fan	㉙Centrifugal Force Switch Fixture
❺1 Stage Pinion	❿Metal Bearing	⓯Bearing	⓴O-ring	㉕Fan Cover	㉚Centrifugal Force Switch Rotating Part

MID Series 3-Phase <F3F Type>

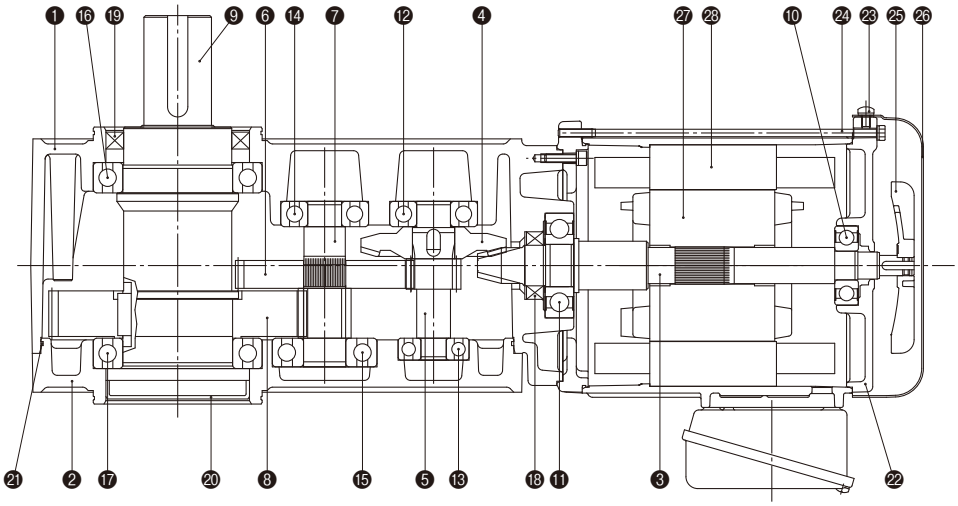

❶Case	❻2 Stage Gear	⓫Bearing	⓰Bearing	㉑O-ring	㉖Fan Cover
❷Case Cover	❼2 Stage Pinion	⓬Bearing	⓱Bearing	㉒Motor Bracket	㉗Rotor
❸Input Shaft	❽Output Shaft Gear	⓭Bearing	⓲Oil Seal	㉓Mounting Screw	㉘Stator
❹1 Stage Gear	❾Output Shaft	⓮Bearing	⓳Oil Seal	㉔Through Bolt	
❺1 Stage Pinion	❿Bearing	⓯Bearing	⓴Seal Cap	㉕Fan	

MID Series 1-Phase <F3F Type>

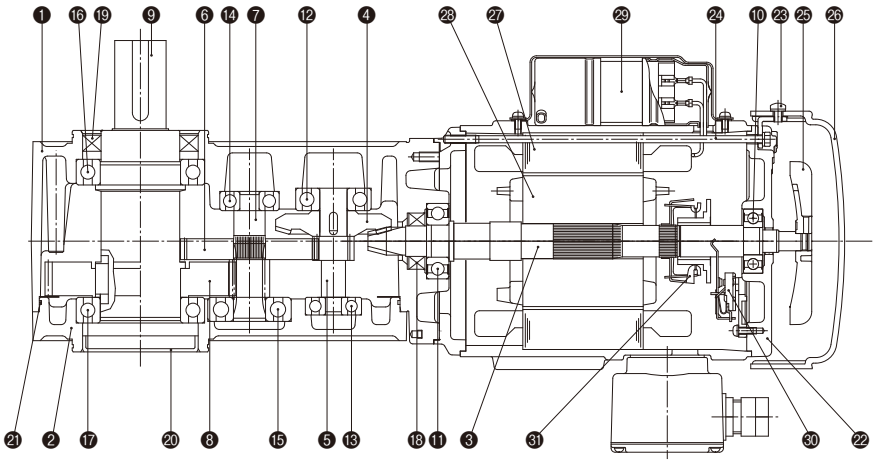

❶Case
❷Case Cover
❸Input Shaft
❹1 Stage Gear
❺1 Stage Pinion
❻2 Stage Gear
❼2 Stage Pinion
❽Output Shaft Gear
❾Output Shaft
❿Bearing
⓫Bearing
⓬Bearing
⓭Bearing
⓮Bearing
⓯Bearing
⓰Bearing
⓱Bearing
⓲Oil Seal
⓳Oil Seal
⓴Seal Cap
㉑O-ring
㉒Motor Bracket
㉓Mounting Screw
㉔Through Bolt
㉕Fan
㉖Fan Cover
㉗Stator
㉘Rotor
㉙Capacitor
㉚Centrifugal Force Switch Fixture
㉛Centrifugal Force Switch Rotating Part

MID Series 3-Phase <F Type/FA Type>

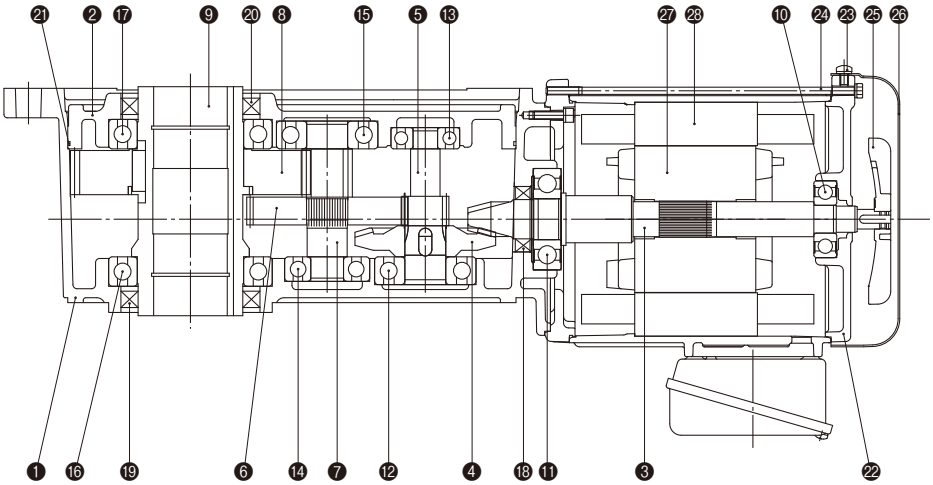

❶Case
❷Case Cover
❸Input Shaft
❹1 Stage Gear
❺1 Stage Pinion
❻2 Stage Gear
❼2 Stage Pinion
❽Output Shaft Gear
❾Output Shaft
❿Bearing
⓫Bearing
⓬Bearing
⓭Bearing
⓮Bearing
⓯Bearing
⓰Bearing
⓱Bearing
⓲Oil Seal
⓳Oil Seal
⓴Oil Seal
㉑O-ring
㉒Motor Bracket
㉓Mounting Screw
㉔Through Bolt
㉕Fan
㉖Fan Cover
㉗Rotor
㉘Stator

MID Series 1-Phase <F Type/FA Type>

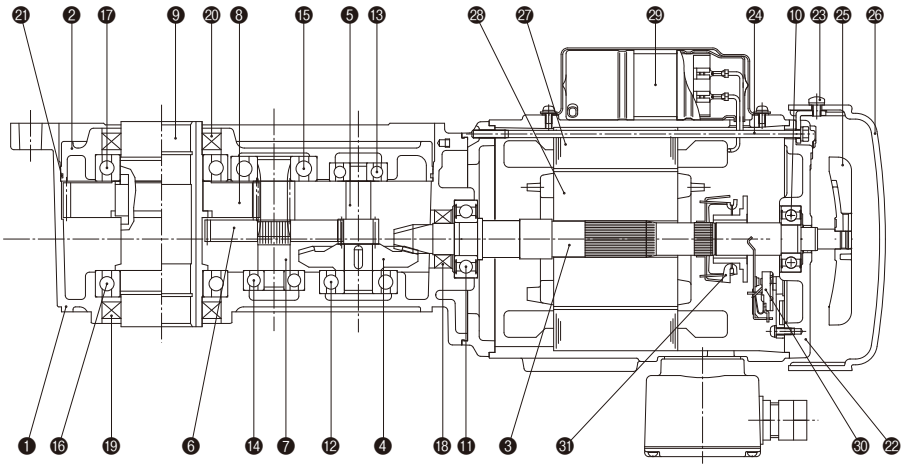

❶Case
❷Case Cover
❸Input Shaft
❹1 Stage Gear
❺1 Stage Pinion
❻2 Stage Gear
❼2 Stage Pinion
❽Output Shaft Gear
❾Output Shaft
❿Bearing
⓫Bearing
⓬Bearing
⓭Bearing
⓮Bearing
⓯Bearing
⓰Bearing
⓱Bearing
⓲Oil Seal
⓳Oil Seal
⓴Oil Seal
㉑O-ring
㉒Motor Bracket
㉓Mounting Screw
㉔Through Bolt
㉕Fan
㉖Fan Cover
㉗Stator
㉘Rotor
㉙Capacitor
㉚Centrifugal Force Switch Fixture
㉛Centrifugal Force Switch Rotating Part

MID Series <Gearmotor with Clutch/Brake>

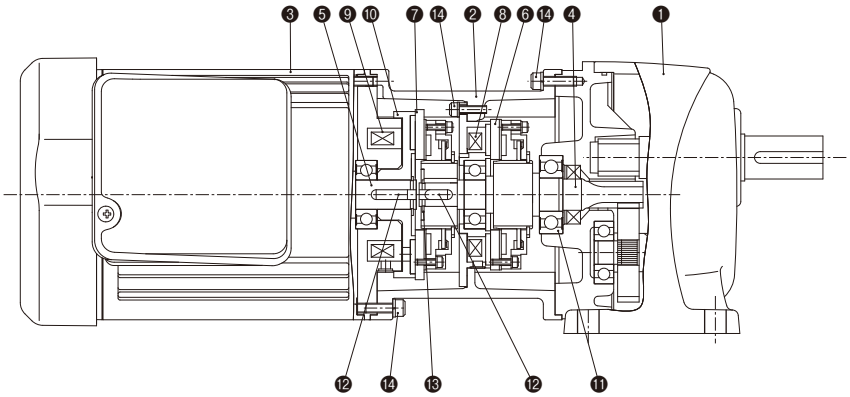

❶Gearhead
❷Bracket
❸Motor
❹OSP (Spline Movable Model)
❺Motor Shaft
❻Armature (For brake)
❼Armature (For Clutch)
❽Field (For Brake)
❾Field (For Clutch)
❿Clutch Rotor
⓫Bearing
⓬Key
⓭Retaining Ring
⓮Hex Head Cap Screw

Specifications and Structure of Gearmotors with Brake

Standard Motors

■ Brake Specifications

MINI Series

[Table-1]

Category \ Motor Power	3-Phase [200 V/400 V], 1-Phase [200 V]					1-Phase [100 V]				
	15 W	25 W	40 W	60 W	90 W	15 W	25 W	40 W	60 W	90 W
Brake Type	Power-Off (Spring Close)									
Rated Torque N·m (At 1500 to 1800 r/min)	0.37				0.54	0.37				0.54
Voltage <Average> (V)	DC90 (Rectifier A200-D90 Included)					DC45 (Rectifier A200-D90 included)				
Power (at 75 °C) (W)	12					11				
Current (at 75 °C) (A)	0.13					0.24				
Allowable Work Load Emax (J)	2.9×10^7									
Allowable Braking Frequency (times/minute)	10									

Note 1: The allowable braking frequency is an approximate value based on predicted temperature rise of the motor. The braking frequency may be increased when the motor load is light or when the motor can be sufficiently cooled. (Keep the motor surface temperature below 90 °C.)
Note 2: Please avoid continuous energization of the brake coil while the motor is inactive.
Note 3: Please use the included rectifier as the brake power supply. If you intend to use a power supply other than the attached rectifier, please contact your nearest Sales Office or the CS Center.
Note 4: The rated torque is a reference value. Not guaranteed values.
Note 5: Use the rated torque value for “Td” when calculating the braking time and connection work load of the brake per operation.
Note 6: With regard to a Three-phase 400 V motor, connect the lead wire (red) from the motor.

MID Series (3-Phase)

[Table-2]

Category \ Motor Power		0.1 kW	0.2 kW	0.4 kW	0.75 kW	1.5 kW	2.2 kW
Brake Type		Power-Off (Spring Close)					
Static Friction Torque Ts (N·m)		1.0	1.9	3.92	7.35	14.7	21.6
Dynamic Friction Torque Td (N·m)		0.80	1.52	3.14	5.88	11.8	17.3
Voltage (Average) (V)	200 V Class	DC90 (Rectifier A200-D90-UL Included)					
	400 V Class	DC180 (Rectifier A400-D180 Included)					
Power (at 75 °C) (W)	200 V Class	11	11	14	20	22	25
	400 V Class	10	10	13	19	23	27
Current (at 75 °C) (A)	200 V Class	0.12	0.12	0.16	0.22	0.24	0.28
	400 V Class	0.06	0.06	0.07	0.11	0.13	0.15
Allowable Work Load Emax	(J)	1.5×10^8	1.5×10^8	1.5×10^8	4.0×10^8	6.0×10^8	6.0×10^8
Allowable Braking Frequency (times/minute)		10					

Note 1: The allowable braking frequency is an approximate value based on predicted temperature rise of the motor. The braking frequency may be increased when the motor load is light or when the motor can be sufficiently cooled.
Note 2: Please use the included rectifier as the brake power supply. If you intend to use a power supply other than the included rectifier, please contact your nearest Sales Office or the CS Center.
Note 3: The input voltage to the rectifier must be used within the range specified below. Please note that repeated operation at a voltage beyond this range may cause a malfunction.
200 V class (A200-D90-UL): 200 V to 230 VAC 400 V class (A400-D180): 380 V to 480 VAC
Note 4: Due to the structure of the brake, the disc produces friction noise during motor operation. However, this does not affect the performance of the brake.
Note 5: Noise from the brake part may increase when operating with an inverter/VFD due to the brake structure, but there is no problem in terms of brake performance.

Specifications and Structure of Gearmotors with Brake

MID Series (1-Phase)

[Table-1]

Category \ Motor Power		0.1 kW	0.2 kW	0.4 kW
Brake Type		Power-Off (Spring Close)		
Static Friction Torque Ts (N·m)		0.98	1.96	3.92
Dynamic Friction Torque Td (N·m)		0.78	1.57	3.14
Voltage (Average) (V)	100 V Class	DC90 (Rectifier A100-D90-UL Included)		
	200 V Class	DC90 (Rectifier A200-D90-UL Included)		
Power (at 75 °C) (W)	100 V Class	15	15	26
	200 V Class	15	15	26
Current (at 75 °C) (A)	100 V Class	0.17	0.17	0.29
	200 V Class	0.17	0.17	0.29
Allowable Work Load Emax	(J)	1.5×10^8	1.5×10^8	4.0×10^8
Allowable Braking Frequency (times/minute)		6		

Note 1: The allowable braking frequency is an approximate value based on predicted temperature rise of the motor. The braking frequency may be increased when the motor load is light or when the motor can be sufficiently cooled.
Note 2: Please avoid continuous energization of the brake coil while the motor is inactive.
Note 3: Please use the included rectifier as the brake power supply. If you intend to use a power supply other than the included rectifier, please contact your nearest Sales Office or the CS Center.
Note 4: The intended service life of the contact of the centrifugal switch of the Single-phase motor is about 300,000 times.
Note 5: The static friction torque and the dynamic friction torque are reference values.
Not guaranteed values.
Note 6: The input voltage to the rectifier must be used within the range specified below. Please note that repeated operation at a voltage beyond this range may cause a malfunction.
A100-D90-UL: 100 to 120 VAC
A200-D90-UL: 200 to 230 VAC

MID Series with Clutch/Brake

[Table-2]

Category \ Motor Power	3-Phase 0.1 kW	3-Phase 0.2 kW	3-Phase 0.4 kW	3-Phase 0.75 kW
Activation Method	Power-On (Spring Close)			
Static Friction Torque Ts (N·m)	1.96	1.96	3.92	7.35
Dynamic Friction Torque Td (N·m)	1.57	1.57	3.14	5.88
Voltage (Average) (V)	DC90 (Rectifier A200-D90 Included)			
Power (at 75 °C, clutch/brake) (W)	10/12	10/12	14/16	13/19
Current (at 75 °C, clutch/brake) (A)	0.11/0.14	0.11/0.14	0.15/0.18	0.14/0.21
Armature Suction Time ta (s)	0.010	0.010	0.015	0.020
Torque Startup Time (s)	0.020	0.020	0.050	0.070
Torque Disappearance Time (s)	0.015	0.015	0.020	0.040
Allowable Connection Work Load (per time) (J)	15	15	27	49
Allowable Work Load Emax (J)	1.2×10^8	1.2×10^8	2.2×10^8	4.3×10^8
Allowable Frequency (times/minute)	50			

Note 1: The allowable braking frequency is an approximate value and varies depending on the usage conditions etc.
Note 2: The allowable braking frequency is an approximate value limited by the rise of the motor temperature.
The braking frequency may be increased when the motor load is light or when the motor can be sufficiently cooled.
Note 3: Please avoid continuous energization of the clutch/brake coil while the motor is inactive.
Note 4: Please use the included rectifier as the clutch/brake power supply.
If you intend to use a power supply other than the included rectifier, please contact your nearest Sales Office or the CS Center.
Note 5: The input voltage to the rectifier must be used within the range specified below. Please note that repeated operation at a voltage beyond this range may cause a malfunction.
A200-D90: 200 V to 220 VAC
Note 6: The static friction torque and the dynamic friction torque are reference values. Not guaranteed values.

■ Brake Structural Diagram

MINI Series

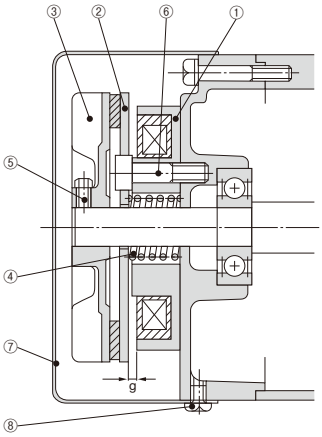

①	Field
②	Armature
③	Fan Assembly
④	Spring
⑤	Hex Head Phillips Bolt
⑥	Hex Head Cap Screw
⑦	Fan Cover
⑧	Fixing Screw for Fan Cover
	g: Gap

MID Series (3-Phase)

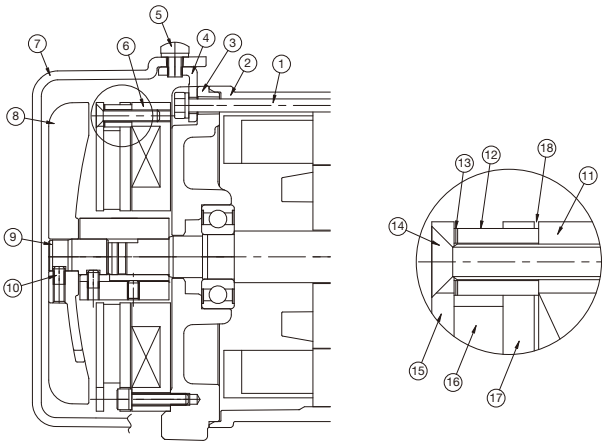

①	Through Bolt
②	Motor Frame
③	Bracket
④	Stay
⑤	Set Screw for Fan Cover
⑥	Brake
⑦	Fan Cover
⑧	Fan
⑨	Extension Shaft
⑩	Set Screw for Fan
⑪	Magnet Assembly
⑫	Collar
⑬	Shim
⑭	Flat Head Screw
⑮	Plate
⑯	Disk
⑰	Armature
⑱	g: Gap

Note: A 0.1 kW gearmotor is a totally enclosed non-ventilated type and therefore not provided with a fan.

MID Series (1-Phase)

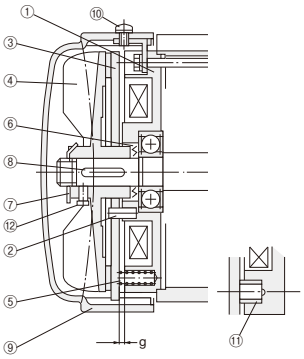

①	Bracket with Field
②	Spring Pin
③	Armature
④	Fan Assembly
⑤	Spring 1
⑥	Spring 2
⑦	Tooth Lock Washer Nut
⑧	Key
⑨	Fan Cover
⑩	Fixing Screw for Fan Cover
⑪	Bush
* ⑫	Hex Head Phillips Bolt
	g: Gap

Note: The bolts for 0.4 kW motors are hex head cap screws.

■ Brake Gap Values

If the brake is used for an extended period of time, the gap will widen and will disable the brake release.
Adjust the gap periodically (about annually or every 1 million to 1.5 million times of use).

MINI Series

Motor Power	Suction Gap	Suitable Gap
15 W to 90 W	g: 0.8 or less	g: 0.4

MID Series (3-Phase)

[Table-1]

Motor Power	Gap (mm)			Recommended Tightening Torque [N·m]	Flat Head Screw Size
	Initial	Limitation	Adjustable		
3-Phase 0.1 kW	0.05 to 0.25	0.4	0.3	2.1 to 2.3	M4
3-Phase 0.2 kW	0.05 to 0.25	0.4	0.3	2.1 to 2.3	M4
3-Phase 0.4 kW	0.05 to 0.25	0.4	0.35	2.1 to 2.3	M4
3-Phase 0.75 kW	0.05 to 0.25	0.45	0.4	2.1 to 2.3	M4
3-Phase 1.5 kW	0.05 to 0.25	0.55	0.5	6.9 to 7.6	M6
3-Phase 2.2 kW	0.05 to 0.35	0.55	0.5	6.9 to 7.6	M6

MID Series (1-Phase)

[Table-2]

Motor Power	Suction Gap	Suitable Gap
1-Phase 0.1 kW	g: 2.3 or less	g: 1.9 ± 0.1
1-Phase 0.2 kW		
1-Phase 0.4 kW	g: 2.4 or less	g: 2.0 ± 0.1

■ Inspecting and adjusting the brake gap

MINI Series　MID Series (1-Phase)

If the brake is used for an extended period of time, the friction disk of the brake will get worn, and the gap (g) will gradually increase.
If the gap (g) becomes wider than the suction gap, it will become more difficult for the magnet to attract the armature upon excitation, and the brake may be disabled from being released properly.
Operating the motor continuously in this condition would lead to the motor running along with brake applied. This may cause overheating of the motor, brake and deteriorate the functionality of the gearmotor.
In order to operate this product safely, inspect or adjust the brake gap periodically (annually or every 1 million to 1.5 million times of use).

MID Series (3-Phase)

If the disk gets worn as a result of long hours of operation and if the gap between the magnet assembly and the armature exceeds the gap limit value shown in [Table-1] above, the brake may malfunction or become unable to be released. For more information about how to inspect and adjust the amount of the gap, refer to the Instruction Manual.
Please note that you can adjust the gap only once. If the adjusted gap exceeds the gap limit again, the brake needs to be replaced. Please contact your nearest Sales Office or the CS Center.

IP65 Motors

■ Brake Specifications

MINI Series

Motor/Output Shaft Frame Size / Category	3-Phase [200 V]			3-Phase [200 V]				1-Phase [100 V]		1-Phase [100 V]		
	15 W	25 W	40 W	25 W	40 W	60 W	90 W	15 W	25 W	25 W	40 W	60 W
	G-12 H-15 F-12	G-12 H-15 F-12	G-12 H-15 F-12	G-15	G-15 G-18 H-18 F-15	G-15 G-18 H-18 F-15	G-18 H-18 F-15	G-12 H-15 F-12	G-12 H-15 F-12	G-15	G-15 G-18 H-18 F-15	G-18
Brake Type	Power-Off (Spring Close)											
Rated Torque N·m <At 1500 to 1800 r/min>	0.32			0.72				0.32		0.72		
Voltage <Average> (V)	DC90 (Rectifier A200-D90 Included)							DC45 (Rectifier A100-D45 Included)				
Power <at 75 °C> (W)	5.8			6.9				5.3		6.8		
Current <at 75 °C> (A)	0.06			0.08				0.12		0.15		
Allowable Work Load Emax J	2.5×10^7			2.9×10^7				2.5×10^7		2.9×10^7		
Allowable Braking Frequency (times/minute)	10											

Note 1: The allowable braking frequency is an approximate value based on predicted temperature rise of the motor. The braking frequency may be increased when the motor load is light or when the motor is sufficiently cooled. (Keep the motor surface temperature below 90 °C.)
Note 2: Please avoid continuous energization of the brake coil while the motor is inactive.
Note 3: Please use the included rectifier as the brake power supply. If you intend to use a power supply other than the attached rectifier, please contact your nearest Sales Office or the CS Center.
Note 4: The rated torque is a reference value. Not guaranteed values.

MID Series (3-Phase)

Motor Power / Category		0.1 kW	0.2 kW	0.4 kW	0.75 kW
Brake Type		Power-Off (Spring Close)			
Static Friction Torque Ts (N·m)		1.0	1.9	3.92	7.35
Dynamic Friction Torque Td (N·m)		0.80	1.52	3.14	5.88
Voltage (Average) (V)	200 V Class	DC90 (Rectifier A200-D90-UL Attached)			
	400 V Class	DC180 (Rectifier A400-D180 Attached)			
Power (at 75 °C) (W)	200 V Class	11	11	15	19
	400 V Class	12	12	14	19
Current (at 75 °C) (A)	200 V Class	0.12	0.12	0.17	0.21
	400 V Class	0.07	0.07	0.08	0.11
Allowable Work Load Emax	(J)	1.5×10^8	1.5×10^8	1.5×10^8	4.0×10^8
Allowable Braking Frequency (times/minute)		10			

Note 1: The allowable braking frequency is an approximate value based on predicted temperature rise of the motor. The braking frequency may be increased when the motor load is light or when the motor can be sufficiently cooled.
Note 2: Please avoid continuous energization of the brake coil while the motor is inactive.
Note 3: Please use the included rectifier as the brake power supply. If you intend to use a power supply other than the included rectifier, please contact your nearest Sales Office or the CS Center.
Note 4: The input voltage to the rectifier must be used within the range specified below. Please note that repeated operation at a voltage beyond this range may cause a malfunction.
200 V Class (A200-D90-UL): 200 V to 230 VAC 400 V Class (A400-D180): 380 V to 480 VAC
Note 5: Due to the structure of the brake, the disc produces friction noise during motor operation. However, this does not affect the performance of the brake.
Note 6: Noise from the brake part may increase when operating with an inverter/VFD due to the brake structure, but there is no problem in terms of brake performance.

Specifications and Structure of Gearmotors with Brake

■ Brake Structural Drawings

MINI Series

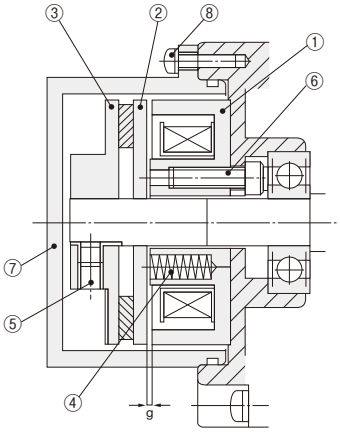

①	Field
②	Armature
③	Friction Disk Assembly
④	Spring
⑤	Set Screw
⑥	Hex Head Cap Screw
⑦	Brake Cover
⑧	Round Head Screw
	g: Gap

Properties

The gearmotor complies with IP65 of IEC Standards.

- This gearmotor is suitable for an environment where water spatters or water washing is periodically performed.
- IP65 is the indication showing the dustproof or water-resistant grade of the product.
- “6” in “IP65” indicates a “complete dustproof structure, and “5” indicates a “protective structure against water jets from any direction.”

Note: Not to be used underwater or in places where high water pressure is applied.

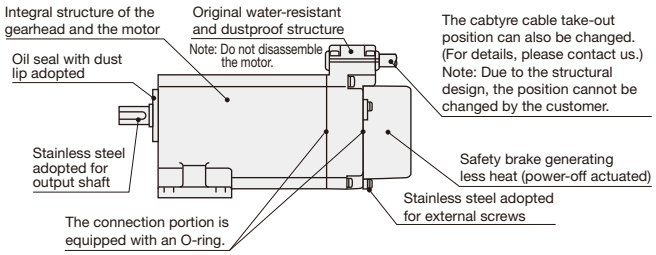

MID Series (3-Phase)

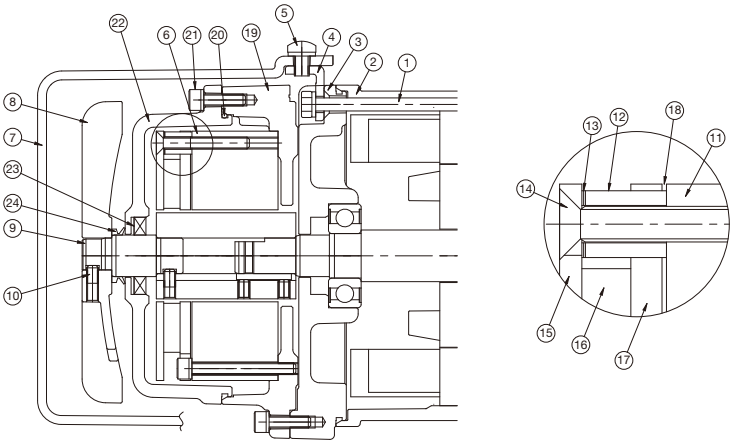

Note: An IP65 0.1 kW gearmotor is a totally enclosed non-ventilated type, and therefore, not provided with a fan cover, fan, and V-ring.

①	Through Bolt
②	Motor Frame
③	Bracket
④	Stay
⑤	Set Screw for Fan Cover
⑥	Brake
⑦	Fan Cover
⑧	Fan
⑨	Extension Shaft
⑩	Set Screw for Fan
⑪	Magnet Assembly
⑫	Collar
⑬	Shim
⑭	Flat Head Screw
⑮	Plate
⑯	Disk
⑰	Armature
⑱	g: Gap
⑲	Spacer
⑳	O-ring
㉑	Cover Fixing Bolt
㉒	Brake Cover
㉓	Oil Seal
㉔	V-ring

■ Brake Gap Values

MID Series (3-Phase)

[Table-1]

Motor Power	Gap (mm)			Recommended Tightening Torque [N·m]	Flat Head Screw Size
	Initial	Limitation	Adjustable		
3-Phase 0.1 kW	0.05 to 0.15	0.45	0.4	2.1 to 2.3	M4
3-Phase 0.2 kW	0.05 to 0.15	0.45	0.4	2.1 to 2.3	M4
3-Phase 0.4 kW	0.05 to 0.15	0.45	0.4	2.1 to 2.3	M4
3-Phase 0.75 kW	0.05 to 0.15	0.5	0.4	2.1 to 2.3	M4

■ Inspecting and adjusting the brake gap

MID Series (3-Phase)

If the disk gets worn as a result of long hours of use and the gap between the magnet assembly and the armature exceeds the gap limit value shown in [Table-1] above, the brake may malfunction or become unable to be released. For more information about how to inspect and adjust the amount of the gap, refer to the Instruction Manual.
Please note that you can adjust the gap only once. If the adjusted gap exceeds the gap limit again, the brake needs to be replaced. Please contact your nearest Sales Office or the CS Center.

Specifications of Gearmotors with Simple Brake/Motor Lead Wires

Gearmotors with Simple Brake

MINI Series

A simple brake (optional) can be mounted on a gearmotor (with a motor). If you require a simple brake on your unit, please inform us when placing an order.

- A simple brake mechanism is provided in order to reduce the costing of the motor.
- Available for both Three-phase and Single-phase gearmotors.
- The holding force values of gearmotors are as shown in the <table below>. If stronger holding force is required, please select a gearmotor with a brake.
- The values are rated values for 30 minutes.

■ Specifications (Reference Values)

Frame	Power	Holding Torque N·cm	Overrun (Running)
G-12·22 H-15·22 F2S-12 F2F-15	15 W	2.9	3 to 5
	25 W		
	40 W		
	60 W		
G-15·28·32 H-18·28·32 F2S-15 F2F-18	25 W	5.9	3 to 5
	40 W		
	60 W		
	90 W		
G-18·40 H-40	40 W	7.4	10 to 15
	60 W		
	90 W		

Note: The overrun is a value under no load.

Motor Lead Wires Specifications

■ Motor Lead Wires

Series	Number of Phases	Voltage	Motor Power	Lead Wire Specifications
MINI	1-Phase	Standard Voltage	15 W to 90 W	UL3266 AWG20
		High Voltage (200 V Class)		
	3-Phase	Standard Voltage		
		High Voltage (400 V Class)		UL3271 AWG24
MID	1-Phase	Standard Voltage	0.1 kW (Capacitor Run)	UL3271 AWG18
		High Voltage (200 V Class)		
		Standard Voltage	0.1 kW (Capacitor Start)	UL3398 AWG16
		High Voltage (200 V Class)		
		Standard Voltage	0.2 kW, 0.4 kW (Capacitor Start)	
		High Voltage (200 V Class)		
	3-Phase	Standard Voltage	0.1 kW to 2.2 kW	UL3289 AWG20
		High Voltage (400 V Class)		

Note: The specification of the lead wires of the MINI Series IP65 gearmotors with a brake is 0.5 mm^2, which is the same size as AWG20.
The specification of the lead wires of the MINI Series IP65 gearmotors is 0.75 mm^2.

■ Brake Lead Wires

Series	Number of Phases	Use of Lead Wires
MINI	3-Phase/1-Phase	UL3266 AWG20
MID	3-Phase	UL3888 AWG22
	1-Phase	UL3266 AWG20
	Clutch/Brake 3-Phase	UL3266 AWG20

Wiring Diagram of Gearmotors

MINI Series

■ 3-Phase Motor

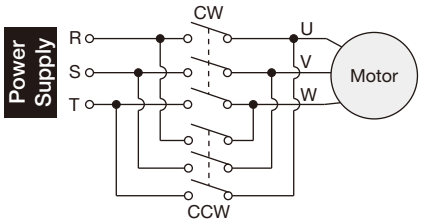

Figure - Codes	Lead Wire Type		Terminal Box Type
	200 V	400 V	Terminal Code
U	Black	Black	U
V	Gray	Brown	V
W	White	White	W

■ 1-Phase Motor

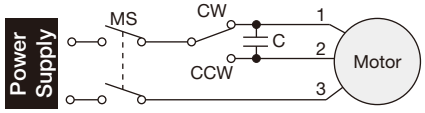

MS : Magnet Switch C: Capacitor

Figure - Codes	Lead Wire Type		Terminal Box Type
	100 V	200 V	Terminal Code
1	Blue	Brown	1
2	Black	Black	2
3	Gray	Gray	3

Note: The rotational direction of the output shaft is shown in the performance table for each model.

■ Capacitor

A capacitor is absolutely required for the operation of a Single-phase motor. Upon use, please connect the included capacitor to the product.
All Single-phase motors are connected by a reversible connection (three lead wires) and can therefore run in the CW and CCW directions as Three-phase motors do.

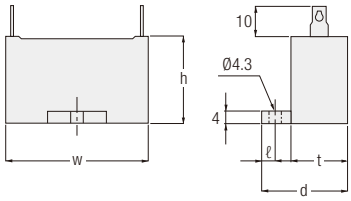

Rated Voltage	Power (μF)	w	h	t	d	ℓ	Input Supply Power
220 V	2.5	31	23.5	14.5	24.5	4.5	100 V
	3.5	31	23.5	14.5	24.5		
	4.5	31	27	17	27		
	5	31	27	17	27		
	6	37	27	18	28		
	7	37	27	18	28		
	8	38	29	19	29		
	9	38	29	19	29		
	10	48	29	19	29		
	12	48	29	19	29		
	13	48	29	19	29		
	14	58	31	21	31		
	15	58	31	21	31		
	20	58	35	22	32		
	26	58	37	23.5	38.5	7	

Rated Voltage	Power (μF)	w	h	t	d	ℓ	Input Supply Power
440 V	1.7	38	31	21	31	4.5	200 V
	2.2	48	29	19	29		
	3.2	58	31	21	31		
	6.5	58	41	29	44	7	
450 V	1	37	27	18	28	4.5	
	1.2	37	27	18	28		
	1.5	38	31	21	31		
	2	38	31	21	31		
	2.5	48	31	21	31		
	3	58	31	21	31		
	3.5	58	35	22	32		
	5	58	41	29	44	7	

Note: For the capacitance of the capacitor, refer to each performance table.

MID Series (3-Phase)

■ Gearmotors Connection (No Brake)

Please use the connection shown below for gearmotors without a brake.
The rotational direction of the output shaft by the connection described below is shown in the performance table for each series.
* For more information about the voltage codes, refer to page 599.
* For the wiring diagrams of gearmotors with a brake, refer to from page 553 onwards.

■ Lead Wires: 3 Lead Wires Type

Voltage Codes	Voltage/Frequency	Wiring Diagram
NN	200 V/50 Hz 200 V/60 Hz 220 V/60 Hz	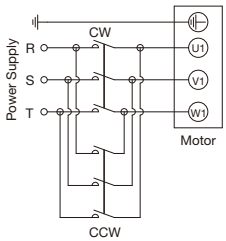
WN	380 V/50 Hz 400 V/50 Hz 400 V/60 Hz 440 V/60 Hz	
EN	415 V/50 Hz 440 V/50 Hz 480 V/60 Hz	
MA	575 V/60 Hz	

Note: Use the attached nuts for the connection.

■ Lead Wires: 6 Lead Wires Type

Voltage Codes	Voltage/Frequency	Wiring Diagram
KN (Dual Voltage) CN (Dual Voltage) DN (Dual Voltage)	220 V/60 Hz 220 V/50 Hz 230 V/50 Hz	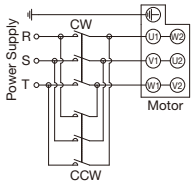
	380 V/60 Hz 380 V/50 Hz	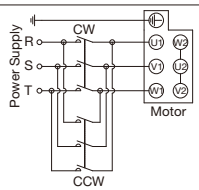

Note: Use the attached nuts and short board for the connection.

■ Lead Wires: 9 Lead Wires Type

Voltage Codes	Voltage/Frequency	Wiring Diagram
AN (Dual Voltage) UN (Dual Voltage)	208 V/60 Hz 230 V/60 Hz	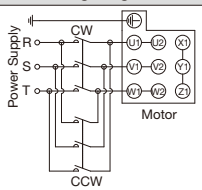
	460 V/60 Hz 400 V/50 Hz	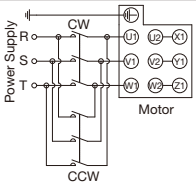

Note: Use the attached nuts and short board for the connection.

MID Series (1-Phase)

■ Gearmotors Connection

Connect the wires of a standard gearmotor as shown below.
The rotational direction of the output shaft by the connection described below is shown in the performance table for model.

■ 1-Phase Motors (Capacitor Start)/Common through G3, GA, H2, F, FA, and F3 Type

Standard Voltage Motor power: 0.1 kW (G3 Type only), 0.2 kW, 0.4 kW	High Voltage (200 V Class) Motor power: 0.1 kW (G3/GA Type only), 0.2 kW, 0.4 kW
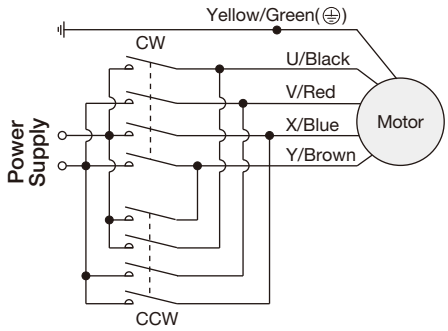	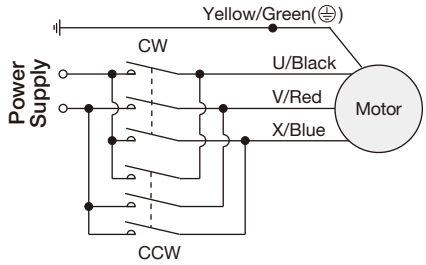

Note 1:GA and FA types are available only in 0.4 kW.

■ 1-Phase Motors (Capacitor Run)/H2, F, and F3 Type

Standard Voltage Motor power: 0.1 kW (Except for G3 Type)	High Voltage (200 V Class) Motor power: 0.1 kW (Except for G3 Type)
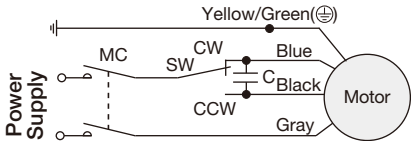	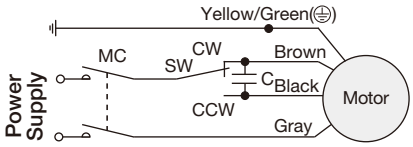

Note 1: A capacitor is required to operate the 1-phase capacitor run type motor. Connect the included capacitor to use the motor.Refer to the following figure.
SW: CW/CCW Switch C: Capacitor MC: Magnetic Contactor
Note 2: 1-phase capacitor run type motors have built-in thermal protectors.Refer to page 643 for the cautions for use.

■ Capacitor

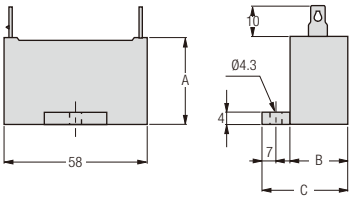

Voltage	Rated Voltage	Power	Approx. Weight	Dimension Diagram (mm)		
				A	B	C
100 V	250 V	30 μF	100 g	50	35	50
200 V	450 V	7 μF	100 g	41	29	44

Wiring Diagram of Gearmotors with Brake

Connection Types and How to Select

Connection	How to Select	Inverter	Lifting Operation	Reduced Wiring	Braking Delay Time
(1) AC Switching (B)	This is the simplest method, and the motor can run simply by connecting the power supply line. This connection method requires fewer wires.	× (Unusable)	× (Unusable)	◎	△
(2) DC Switching	This connection method is optimal for applications requiring sudden braking, mainly for lifting operation, since it offers the shortest braking delay time.	○ (Usable)	◎ (Optimal)	△	◎
(3) AC Switching (A)	This connection method can separate the circuit between the motor and the brake and is optimal for driving with an inverter.	◎ (Optimal)	○ (Usable)	○	○

Note: The braking delay time is the time from the moment of turning off the switch to the start of braking, and is different from the braking time.
For the braking delay times caused by the different connection methods, refer to [Table-1] on page 569.
.If you require braking time information, refer to the material for calculating braking times on page 530.

MINI Series

■ Precautions for Wiring

- Please utilize DC switching when using the gearmotor for vertical operation (lifting).
- For a DC switching connection, please connect a surge suppressor (optional) between the contacts. For surge suppressors (optional), refer to page 589.
- In the case of a Single-phase 100 V gearmotor, the input voltage of rectifier A200-D90 (A100-D45) is 100 VAC, and the output voltage is 45 VDC.
- Use switches of 110 VDC with a contact point rating of DC13 to block the inductive load of the DC coil when using DC switching connection. For more details, please contact your nearest Sales Office or the CS Center.
  * Contact rating class DC13 is a specification applicable to coil loads and a type defined in JIS C 8201-5-1 (Low-voltage switchgear and control gear).
- Please note that the rectifier contains a diode which will become unusable if it is shorted out due to, for example, improper wiring.
- For connection methods for Three-phase High Voltage (400 V Class) and special voltages exceeding 220 V, connect the separate 200 V terminal (red lead wire) drawn out of the motor to the input lead wire (white/yellow) of the rectifier. The separate 200 V terminal drawn out of the motor cannot be used when using an inverter.
- For information and precautions involving the connection for using an inverter, refer to page 591.

■ Standard Voltage

Connection	3-phase 15 to 90 W	1-phase 15 to 90 W
(1) AC Switching (B)	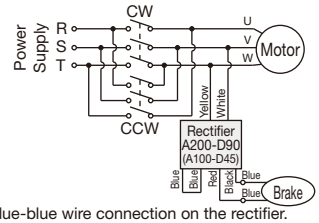 Short the blue-blue wire connection on the rectifier.	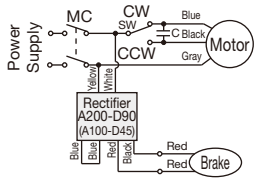 Short the blue-blue wire connection on the rectifier.
(2) DC Switching	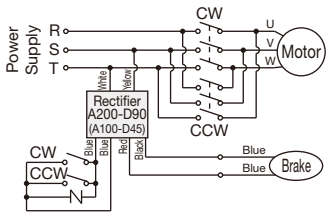	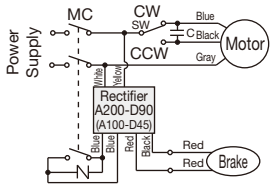
(3) AC Switching (A)	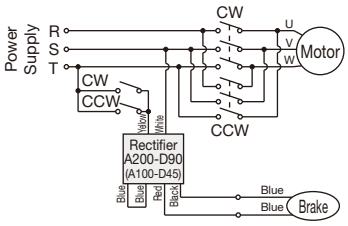 Short the blue-blue wire connection on the rectifier.	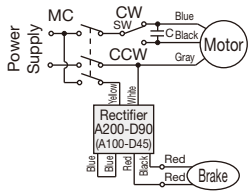 Short the blue-blue wire connection on the rectifier.

SW: CW/CCW Switch C: Capacitor MC: Magnetic Contactor -N-: Surge Suppressor (optional)

■ High Voltage

Connection	3-phase 15 W to 90 W (400 V Class)	1-phase 15 W to 90 W (200 V Class)
(1) AC Switching (B)	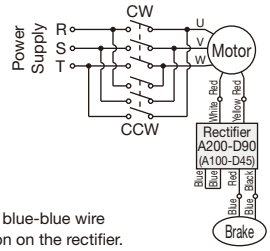 Short the blue-blue wire connection on the rectifier.	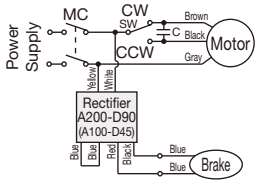 Short the blue-blue wire connection on the rectifier.
(2) DC Switching	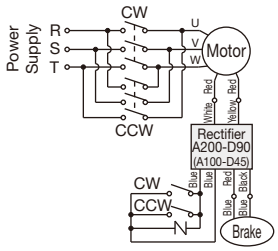	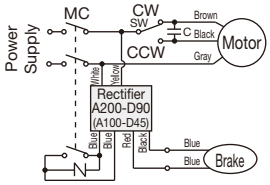
(3) AC Switching (A)	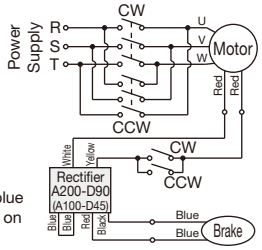 Short the blue-blue wire connection on the rectifier.	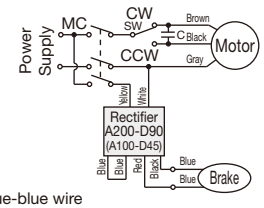 Short the blue-blue wire connection on the rectifier.

SW: CW/CCW Switch C: Capacitor MC: Magnetic Contactor -N-: Surge Suppressor (optional)

Wiring Diagram of Gearmotors with Brake

■ C Type Terminal Box (3-Phase)

Connection	3-Phase	
AC Switching (B)	Standard Voltage / High Voltage (400 V Class)	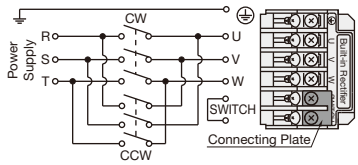
DC Switching	Standard Voltage / High Voltage (400 V Class)	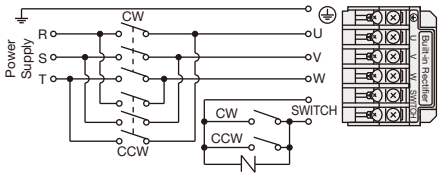
AC Switching (A) Custom Specifications	Standard Voltage	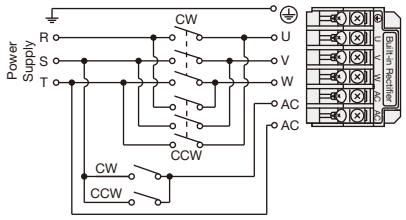
	High Voltage (400 V Class) Motor 200V Terminal	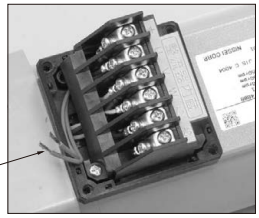 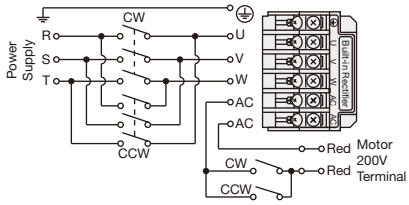
Separate Rectifier Custom Specifications	Standard Voltage	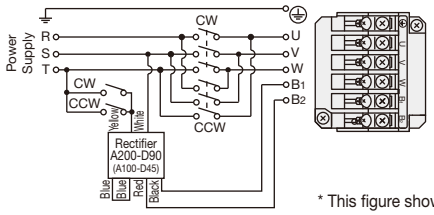 * This figure shows AC switching (A).
	High Voltage (400 V Class) Motor 200V Terminal	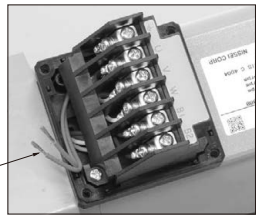 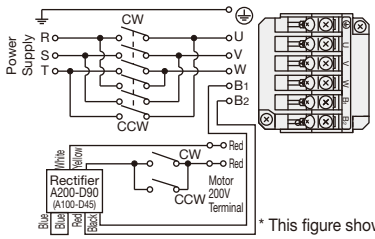 * This figure shows AC switching (A).

-N-: Surge Suppressor (optional)

■ C Type Terminal Box (1-Phase)

Connection	1-Phase		
AC Switching (B)	Standard Voltage / High Voltage (200 V Class)	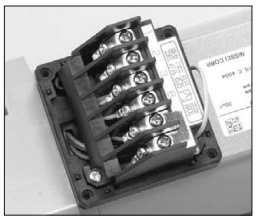	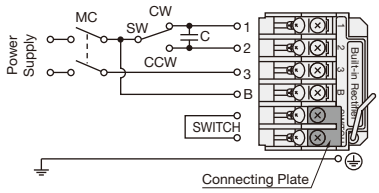
DC Switching	Standard Voltage / High Voltage (200 V Class)		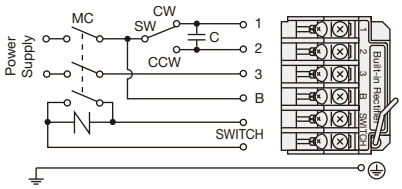
AC Switching (A)	Standard Voltage / High Voltage (200 V Class)	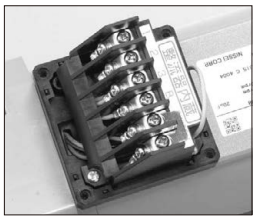	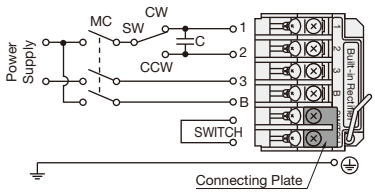

SW: CW/CCW Switch C: Capacitor MC: Magnetic Contactor ⊣N⊢ : Surge Suppressor (optional)

Note 1: Adopt DC switching when using the gearmotor for vertical operation (lifting).
Note 2: For a DC switching connection, connect a surge suppressor (optional) between the contacts. For surge suppressors (optional), refer to page 589.
Note 3: Use switches of 110 VDC with a contact point rating of DC13 to block the inductive load of the DC coil when using DC switching connection.
Please contact us for more details.
* Contact rating class DC13 is a specification applicable to coil loads and a type defined in JIS C 8201-5-1 (Low-voltage switchgear and control gear).
Note 4: Please note that the rectifier contains a diode and will become unusable if it is shorted due to, for example, improper wiring.
Note 5: For connection methods for Three-phase High Voltage(400 V Class) and special voltages exceeding 220 V, connect the separate 200 V terminal (red lead wire) drawn out of the motor to the lead wire (white/yellow) of the rectifier.
The separate 200 V terminal drawn out of the motor cannot be used when using an inverter.
For information and precautions involving the connection for using an inverter, refer to page 591.

Wiring Diagram of Gearmotors with Brake

MID Series (3-Phase)

■ Gearmotors Connection (Brakemotor)

Connect the wires of a gearmotor with a brake as shown below. The rotational direction of the output shaft by the connection described below is shown in the performance table for each series.

* For more information about the voltage codes, refer to page 599.
* For the wiring diagrams of gearmotors without a brake, refer to page 547.

■ Precautions for Wiring

- Be sure to adopt “DC switching” when using the gearmotor for vertical operations (lifting).
- For a DC switching connection, please connect a surge suppressor (optional) between the contacts. For surge suppressors (optional), refer to page 589.
  (The varistor voltage is 423 V to 517 V in the case of a 200 V class brake or 820 V to 1000 V in the case of a 400 V class brake.)
- The brake voltage is 90 VDC in the case of a 200 V class brake and 180 VDC in the case of a 400 V class brake.
- The brake lead wires are the blue lead wires in the case of a 200 V class brake or the yellow lead wires in the case of a 400 V class brake.
- When adopting a DC switching connection, use a contactor with a contact capacity for 110 VDC <220 VDC> or contact rating class DC13 in order to shut down the inductive load (DC coil). Please contact us for more details.
  * Contact rating class DC13 is a specification applicable to coil loads and a type defined in JIS C 8201-5-1 (Low-voltage switchgear and control gear). * The items in < > are for 400 V class brakes.
- The rectifier contains a diode and will become unusable if it is shorted due to, for example, improper wiring. Please be cautious.
- For information and precautions involving the connection for using an inverter, refer to page 592.

■ Lead Wires: 3 Lead Wires Type

Voltage Codes	NN	WN	EN	MA
Voltage/ Frequency	200 V/50 Hz, 200 V/60 Hz, 220 V/60 Hz	380 V/50 Hz, 400 V/50 Hz 400 V/60 Hz, 440 V/60 Hz	415 V/50 Hz, 440 V/50 Hz 480 V/60 Hz	575 V/60 Hz
AC Switching (B)	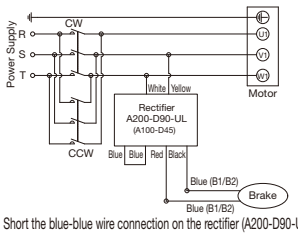 Short the blue-blue wire connection on the rectifier (A200-D90-UL).	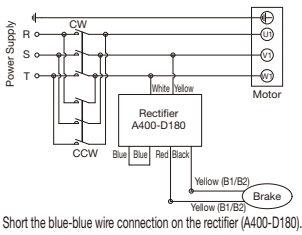 Short the blue-blue wire connection on the rectifier (A400-D180).		
AC Switching (A)	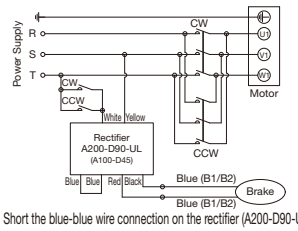 Short the blue-blue wire connection on the rectifier (A200-D90-UL).	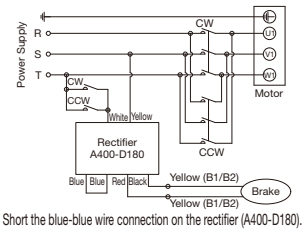 Short the blue-blue wire connection on the rectifier (A400-D180).		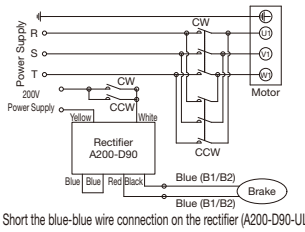 Short the blue-blue wire connection on the rectifier (A200-D90-UL).
DC Switching	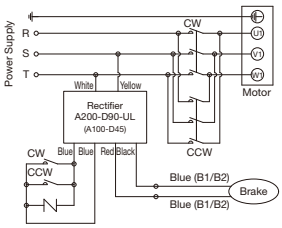 ⊣N⊢ : Surge Suppressor OP-ERZV10D471 (Optional)	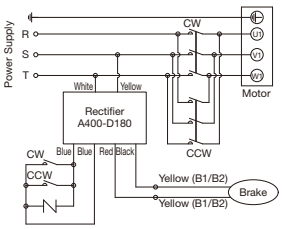 ⊣N⊢ : Surge Suppressor OP-ERZV10D911 (Optional)		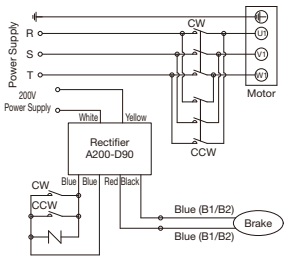 ⊣N⊢ : Surge Suppressor OP-ERZV10D471 (Optional)

Note: Use the included nuts for the connection.

■ Lead Wires: 6 Lead Wires Type

Voltage Codes	KN (Dual Voltage) CN (Dual Voltage) DN (Dual Voltage)	
Voltage/ Frequency	220 V/60 Hz, 220 V/50 Hz, 230 V/50 Hz	380 V/60 Hz, 380 V/50 Hz
AC Switching (B)	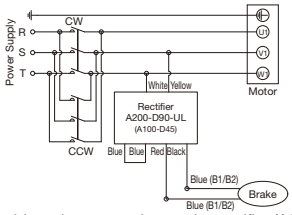 Short the blue-blue wire connection on the rectifier (A200-D90-UL).	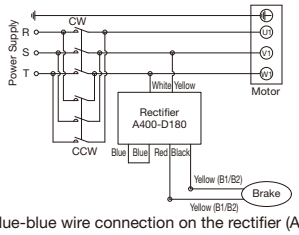 Short the blue-blue wire connection on the rectifier (A400-D180).
AC Switching (A)	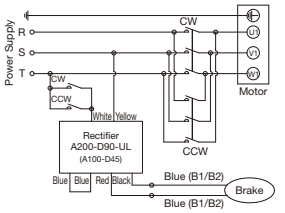 Short the blue-blue wire connection on the rectifier (A200-D90-UL).	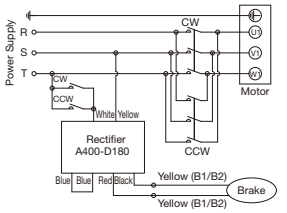 Short the blue-blue wire connection on the rectifier (A400-D180).
DC Switching	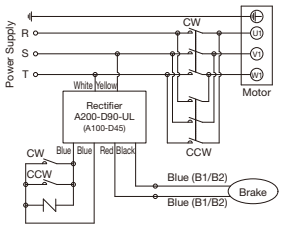 –N– : Surge Suppressor OP-ERZV10D471 (Optional)	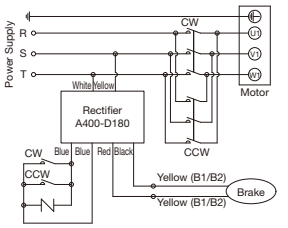 –N– : Surge Suppressor OP-ERZV10D911 (Optional)

Note: Use the included nuts for the connection.
Note: The B1 and B2 terminals are within the terminal box.

Wiring Diagram of Gearmotors with Brake

■ Lead Wires: 9 Lead Wires Type

Voltage Codes	AN (Dual Voltage) UN (Dual Voltage)	
Voltage/ Frequency	208 V/60 Hz, 230 V/60 Hz	460 V/60 Hz, 400 V/50 Hz
AC Switching (B)	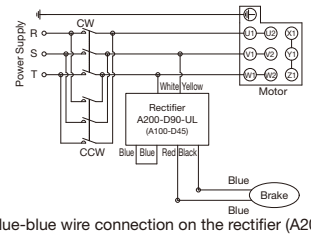 Short the blue-blue wire connection on the rectifier (A200-D90-UL).	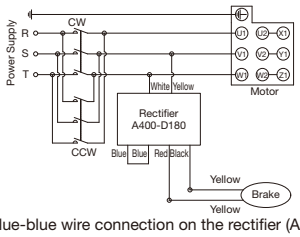 Short the blue-blue wire connection on the rectifier (A400-D180).
AC Switching (A)	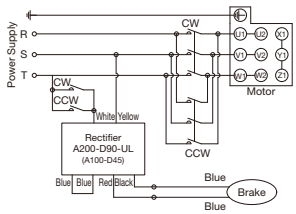 Short the blue-blue wire connection on the rectifier (A200-D90-UL).	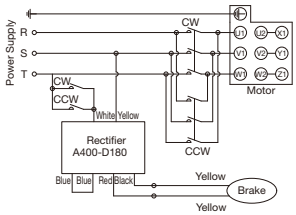 Short the blue-blue wire connection on the rectifier (A400-D180).
DC Switching	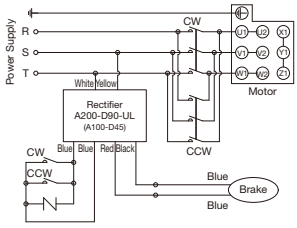 –N– : Surge Suppressor OP-ERZV10D471 (Optional)	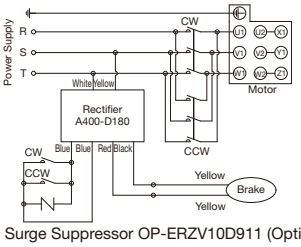 –N– : Surge Suppressor OP-ERZV10D911 (Optional)

Note: Use the included nuts and short board for the connection.
Note: The brake lead wires are drawn into the terminal box, but are not fixed to the terminal block.

MID Series (1-Phase)

■ Precautions for Wiring

- Please utilize DC switching when using the gearmotor for vertical operation (lifting).
- For a DC switching connection, please connect a surge suppressor (optional) between the contacts. For surge suppressors (optional), refer to page 589.
- When adopting a DC switching connection, use a contactor with a contact capacity for 110 VDC or contact rating class DC13 in order to shut down the inductive load (DC coil).
  Please contact us for more details.
  * Contact rating class DC13 is a specification applicable to coil loads and a type defined in JIS C 8201-5-1 (Low-voltage switchgear and control gear).
- Please note that the rectifier contains a diode which will become unusable if it is shorted out due to, for example, improper wiring.

■ Connection Method

	Standard Voltage		High Voltage (200 V Class)	
	Capacitor Run (Note 1) Brake Lead Wires: Blue 0.1 kW (H2, F, F3 Types)	Capacitor Start Brake Lead Wires: Blue 0.1 kW (G3 type), 0.2 kW, 0.4 kW	Capacitor Run (Note 1) Brake Lead Wires: Blue 0.1 kW (H2, F, F3 Types)	Capacitor Start Brake Lead Wires: Blue 0.1 kW (G3 type), 0.2 kW, 0.4 kW
AC Switching (B)	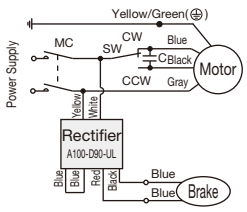 Short the blue-blue wire connection on the rectifier.	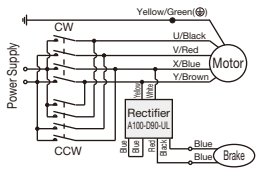 Short the blue-blue wire connection on the rectifier.	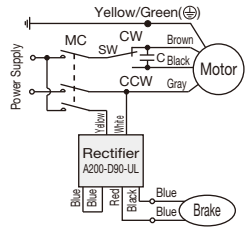 Short the blue-blue wire connection on the rectifier.	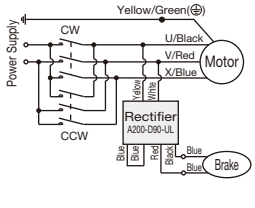 Short the blue-blue wire connection on the rectifier.
DC Switching	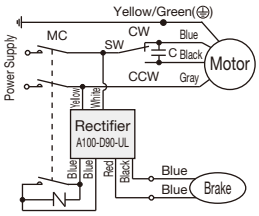	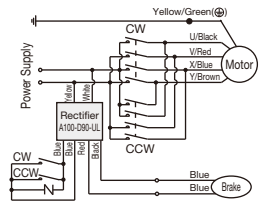	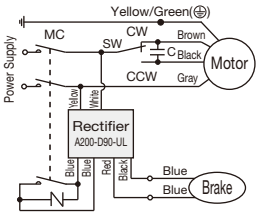	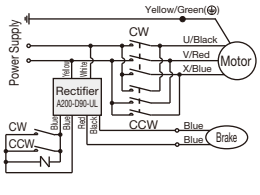
AC Switching (A)	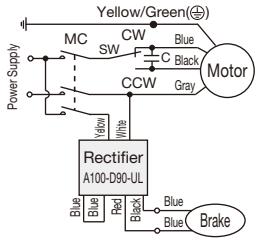 Short the blue-blue wire connection on the rectifier.	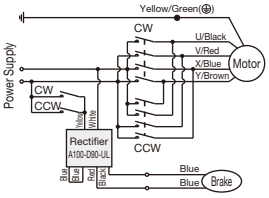 Short the blue-blue wire connection on the rectifier.	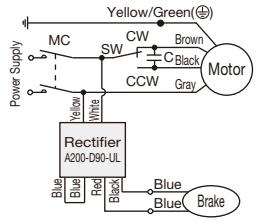 Short the blue-blue wire connection on the rectifier.	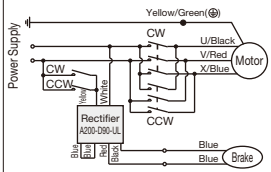 Short the blue-blue wire connection on the rectifier.

SW: CW/CCW Switch C: Capacitor MC: Magnetic Contactor -N- : Surge Suppressor (optional)

Note 1: 1-phase capacitor run type motors have built-in thermal protectors.Refer to page 643 for the cautions for use.

Wiring Diagram of Gearmotors with Clutch/Brake

MID Series (Clutch/Brake)

A DC voltage of 90 V is required to operate the clutch/brake. Connect the wires of the attached rectifier A200-D90 and two surge suppressors for spark quenching (OP-ERZV10D471) according to the connection method described below. For the dimensions of the rectifier, refer to page 589.

■ Precautions for Wiring

- For the protection of the rectifier, install a fuse (capacity: 1 A) on the input or output side of the circuit.
- Please note that the rectifier contains a diode and will become unusable if it is shorted due to, for example, improper wiring.
- With regard to the relay for the clutch/brake circuit, use a contactor with a contact capacity for 110 VDC or contact rating class DC13 in order to shut down the inductive load (DC coil). Please contact us for more details.
  * Contact rating class DC13 is a specification applicable to coil loads and a type defined in JIS C 8201-5-1 (Low-voltage switchgear and control gear).
- The clutch/brake is not available for 400 V.

Standard Voltage

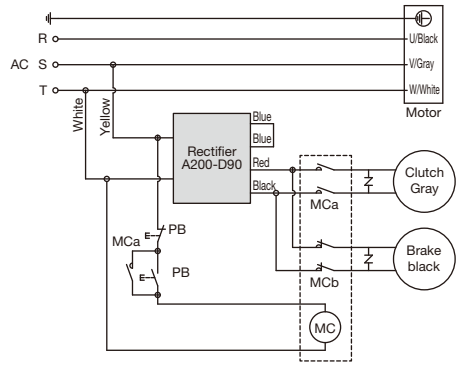

MC: Relay Coil
MCa: Magnetic Contactor a Contact
MCb: Magnetic Contactor b Contact
PB: Pushbutton
-⊥-: Surge Suppressor (Accessory OP-ERZV10D471)

High Voltage (400 V Class)

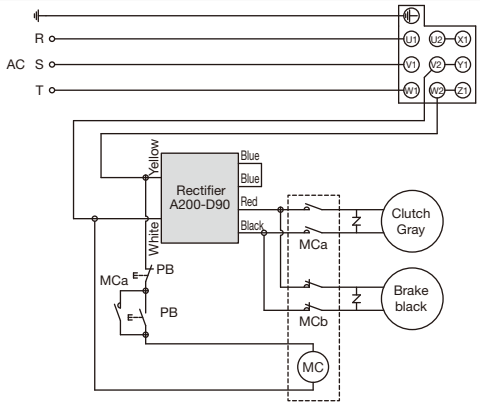

MC: Relay Coil
MCa: Magnetic Contactor a Contact
MCb: Magnetic Contactor b Contact
PB: Pushbutton
-⊥- : Surge Suppressor (Accessory OP-ERZV10D471)

Wiring Diagram of Built-in Rectifier of Gearmotors with Brake

■ Connection Types and Specifications and How to Select of C-Type terminal box

Connection	Specifications and How to Select	Inverter	Lifting Operation	Reduced Wiring	Braking Delay Time
AC Switching (B)	A rectifier is built into the C-Type terminal box, with AC switching (B) connection. This is the simplest method: just connect the power supply line to run the motor. Furthermore, the connection can be changed to DC switching by removing the connecting plate.	× (Unusable)	× (Unusable)	◎	△
DC Switching	This connection method is optimal for applications requiring sudden braking, mainly for lifting operations, since it offers the shortest braking delay time. Remove the connecting plate to use the DC switching connection.	× (Unusable)	◎ (Optimal)	△	◎
AC Switching (A)	*Custom Specifications Although this connection method uses a built-in rectifier, it allows a separate circuit between the motor and the brake, making it optimal for use with inverters/VFDs. In case of a 200 V brakemotor with high voltage, the 200 V terminal is separately drawn out of the motor. However, it is not fixed to the terminal block. When the motor is running with inverter/VFD control, this 200 V terminal cannot be used. Prepare 200 V AC separately for input supply power to the AC terminal. * 3-phase only.	◎ (Optimal)	○ (Usable)	○	○
Separate Rectifier	*Custom Specifications With this connection, the brake lead wires are drawn into and fixed to the terminal block. A rectifier is not built in. Wiring is flexible to meet your specifications, such as placing a rectifier inside of the switchboard. In case of high voltage specifications, the 200 V terminal is separately drawn out of the motor. However, it is not fixed to the terminal block. The separate rectifier needs to be specified at the time of placing an order because it is a custom option item. A rectifier is included with the motor. Please select a connection method from the wiring diagram on page 549 to connect the wires of the rectifier. * 3-phase only.	Depends on the connection method (AC Switching (A), AC Switching (B), DC Switching) of the rectifier in the switchboard.		—	—

Note 1: The braking delay time is the time from the moment of turning off the switch to the start of braking, and is different from the braking time.
For the braking delay times caused by the different connection methods, refer to page 569.
If you require braking time information, refer to the material for calculating braking times on page 530.

Note 2: Please specify “AC Switching (A)” at te time of placing an order if you are going to use an inverter/VFD. Please be noticed that(Custom Specifications) "AC Switching (B)" and "DC Switching" cannot be used with an inverter. For high voltage specifications, the separate 200 V terminal drawn out of the motor cannot be used. For more details, please contact our Sales Office or the CS Center. For precautions about the use of an inverter/VFD, please refer to page 591.

● Rated Currents

The rated current values in the motor characteristics table shows the rated current data for the motor operating without a gearbox. For terminal boxes with a built-in rectifier, the value of the current flowing to the brake must be considered. For more details, please contact our Sales Office or the CS Center.

Wiring Diagram of Built-in Rectifier of Gearmotors with Brake

■ C Type Terminal Box (3-Phase)

Connection	3-Phase		
AC Switching (B)	Standard Voltage / High Voltage (400 V Class)		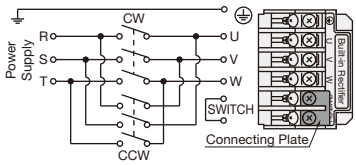
DC Switching	Standard Voltage / High Voltage (400 V Class)		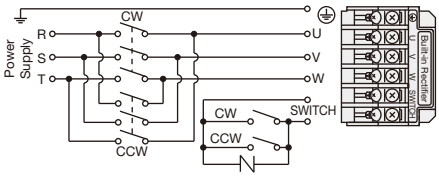
AC Switching (A) Custom Specifications	Standard Voltage		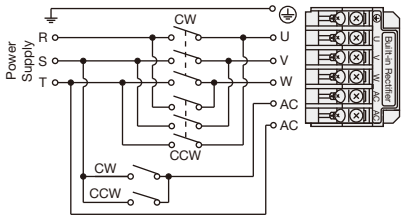
	High Voltage (400 V Class) Motor 200V Terminal		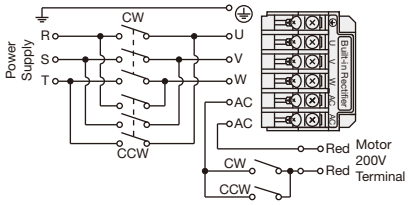
Separate Rectifier Custom Specifications	Standard Voltage		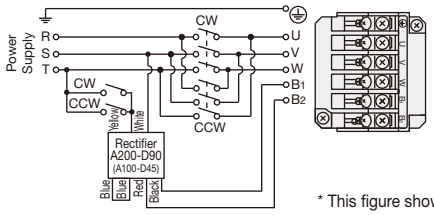 * This figure shows AC switching (A).
	High Voltage (400 V Class) Motor 200V Terminal	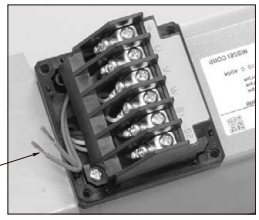	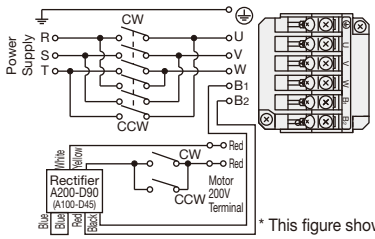 * This figure shows AC switching (A).

-N-: Surge Suppressor (optional)

■ C Type Terminal Box (1-Phase)

Connection	1-Phase		
AC Switching (B)	Standard Voltage / High Voltage (200 V Class)	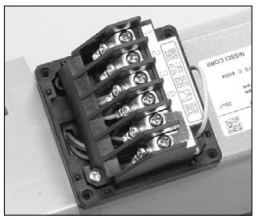	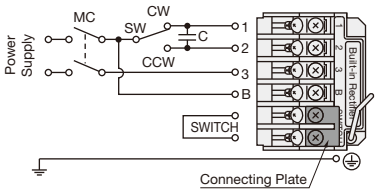
DC Switching	Standard Voltage / High Voltage (200 V Class)		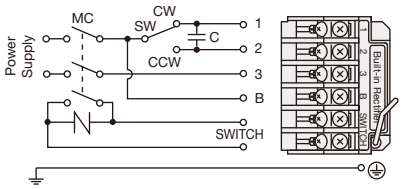
AC Switching (A)	Standard Voltage / High Voltage (200 V Class)	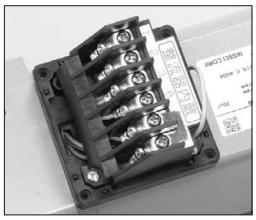	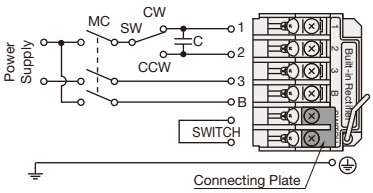

SW: CW/CCW Switch C: Capacitor MC: Magnetic Contactor -N- : Surge Suppressor (optional)

Note 1: Adopt DC switching when using the gearmotor for vertical operation (lifting).
Note 2: For a DC switching connection, connect a surge suppressor (optional) between the contacts. For surge suppressors (optional), refer to page 589.
Note 3: Use switches of 110 VDC with a contact point rating of DC13 to block the inductive load of the DC coil when using DC switching connection.
Please contact us for more details.
* Contact rating class DC13 is a specification applicable to coil loads and a type defined in JIS C 8201-5-1 (Low-voltage switchgear and control gear).
Note 4: Please note that the rectifier contains a diode and will become unusable if it is shorted due to, for example, improper wiring.
Note 5: For connection methods for Three-phase High Voltage(400 V Class) and special voltages exceeding 220 V, connect the separate 200 V terminal (red lead wire) drawn out of the motor to the lead wire (white/yellow) of the rectifier.
The separate 200 V terminal drawn out of the motor cannot be used when using an inverter.
For information and precautions involving the connection for using an inverter, refer to page 591.

Wiring Diagram of Built-in Rectifier of Gearmotors with Brake

MID Series (3-Phase)

■ Built-in Rectifier

A rectifer can be installed and pre-wired within the terminal box of the product upon request. Please feel free to request when placing an order. For the purchasing codes of each connection type, please refer to the table below.

■ Target Products

- Standard Voltage / High Voltage (400 V Class)
- Special Voltage * However, power supply code M (575 V/60 Hz) is not supported.

● T-Type terminal box (steel plate) ● E-Type terminal box (aluminum)

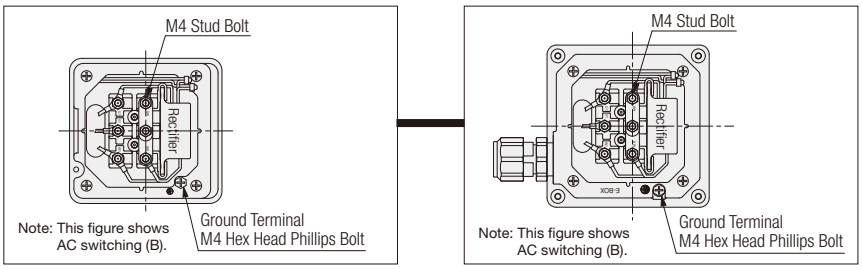

Note: For the connections, refer to page 562.
.For the option code for each brake connection for a built-in rectifier, refer to the description below.

Standard terminal boxes for gearmotors with a brake are provided with a rectifier separately.
If you desire a built-in rectifier, we may wire the rectifier for you. You may instruct the connection according to the following procedure:

Type Type Code for Ordering (Example) (Use this code to specify the connection.)	
AC Switching B (AC Switching B)	AB
AC Switching A (AC Switching A)	AA
DC Switching (DC Switching)	DC

The option code for brake connection will be indicated in the option code slot on the nameplate.

■ Description of Type Codes

X **AA**

Option Code for Brake Connection
(AA indicates AC switching (A) for the brake connection.)

Option (X)

Connection	Connection Types and Specifications and How to Select	Inverter Operation	Lifting Operation	Reduced Wiring	Braking Delay Time	Ordering Code
AC Switching (B)	This is the simplest method with a built-in rectifier, and the motor can run simply by connecting the power supply line. Moreover, a DC switching connection is also possible by removing the connection plate.	× (Unusable)	× (Unusable)	◎	△	AB
AC Switching (A)	Although this connection method uses a built-in rectifier, it allows a separate circuit between the motor and the brake. Making it optimal for use with inverters.	◎ (Optimal)	○ (Usable)	○	○	AA
DC Switching	This connection method is optimal for applications requiring sudden braking, mainly for lifting operation, since it offers the shortest braking delay time.	× (Unusable)	◎ (Optimal)	△	◎	DC

Note: Add the ordering code to the end of the part number. Example: G3L28N15-MR08TNNTB2X AB (When using AC switching (B))

Note 1: The braking delay time is the time from the moment of turning off the switch to the start of braking, and is different from the braking time.
For the braking delay times by different connection methods, refer to page 569.
.If you require braking time information, refer to the material for calculating braking times on page 530.
Note 2: When using an inverter, be sure to instruct under “AC switching (A)” at the time of placing an order. Please note that “AC switching (B)” and “DC Switching” cannot be used with an inverter. In addition, for precautions about the use of an inverter, refer to page 591.

■ Rated Currents

The motor performance tables on pages 622 to 625 show the rated current of the motor alone. When a rectifier is built into the terminal box, the value of the current flowing to the brake must be considered. For more details, please contact your nearest Sales Office or the CS Center.

■ Precautions for Wiring

- The SW terminal or AC terminal are within the terminal box.
- Be sure to adopt “DC switching” when using the gearmotor for vertical operations (lifting).
- For a DC switching connection, please connect a surge suppressor (optional) between the contacts. For surge suppressors (optional), refer to page 589.
  (The varistor voltage is 423 V to 517 V in the case of a 200 V class brake or 820 V to 1000 V in the case of a 400 V class brake.)
- The brake voltage is 90 VDC in the case of a 200 V class brake and 180 VDC in the case of a 400 V class brake.
- The brake lead wires are the blue for 200 V class brake and yellow for 400 V class brake. The connection terminals on the terminal block are B1 and B2.
- When adopting a DC switching connection, use a contactor with a contact capacity for 110 VDC <220 VDC> or contact rating class DC13 in order to shut down the inductive load (DC coil). Please contact us for more details.
  * Contact rating class DC13 is a specification applicable to coil loads and a type defined in JIS C 8201-5-1 (Low-voltage switchgear and control gear).
  * The items in < > are for 400 V class brakes.
- The rectifier contains a diode and will become unusable if it is shorted due to, for example, improper wiring. Please be cautious
- For information and precautions involving the connection for using an inverter, refer to page 591.
- Please note that the power supply that can be used for type codes (supply voltage) “K”, “C”, “D”, “U” and “A”, (types that show both 200 V class and 400 V class voltages on the nameplate) is different depending on the brake voltage type.
  Gearmotors with a 200 V class brake (brake part number B2, J2, or V2: blue lead wires) can also be operated with 200 V class voltage.They cannot be operated with 400 V class voltage.
  Gearmotors with a 400 V class brake (brake part number B4, J4, or V4: yellow lead wires) can also be operated with 400 V class voltage.They cannot be operated with 200 V class voltage.class voltage. It cannot be operated with a 200 V class voltage.

■ Types and Connection Methods

Connection	3-Phase: 200 V Class/400 V Class
AC Switching (B)	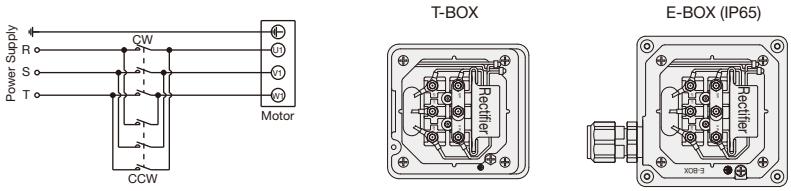 Note: The rectifier models are “A200-D90-UL” for the 200 V class and “A400-D180” for the 400 V class.
AC Switching (A)	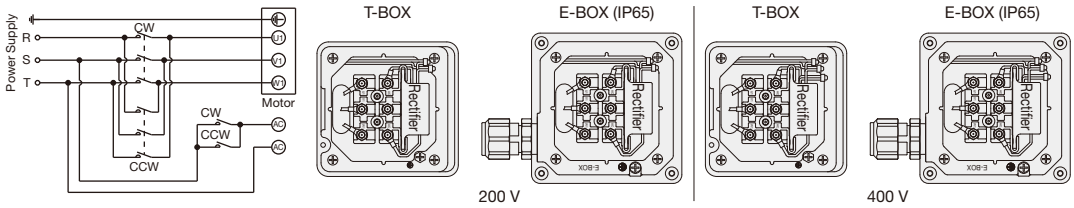 Note: The rectifier models are “A200-D90-UL” for the 200 V class and “A400-D180” for the 400 V class.
DC Switching	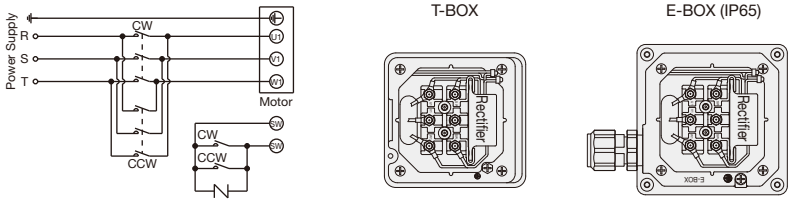 Note: The rectifier models are “A200-D90-UL” for the 200 V class and “A400-D180” for the 400 V class.

-N-: Surge Suppressor (optional)

MEMO

Wiring Diagram of IP65 Gearmotors with Brake

MINI Series

Lead Wires and Connections

Note: For more information about brakemotor, refer to page 565.

● 3-Phase Motor

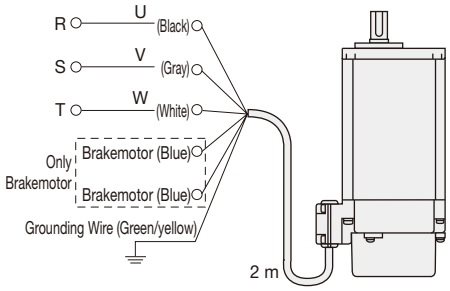

The rotational direction will be reversed by switching two of the U, V, and W wires.

● 1-Phase Motor

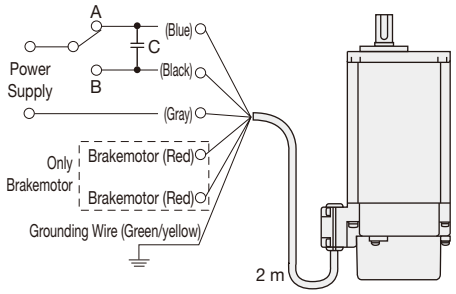

To reverse the rotational direction, switch A and B.

C: Capacitor

Note 1: A voltage that is almost double the motor supply voltage is applied between both terminals of the capacitor for Single-Phase motor. To ensure safety, please be sure to insulate the terminals.
Note 2: When stripping the sheath of the cabtyre cable, take care not to damage the wire inside.
Note 3: Please note that the cable is not a flexible cable (robot cable).
Note 4: When using the motor in a place where it will be exposed to water during operation, it is recommended to use an electrical leakage breaker to ensure safety.

■ Capacitor

A capacitor is absolutely required for the operation of a Single-phase motor. Upon use, please connect the included capacitor to the product.
All Single-phase motors are connected by a reversible connection (three lead wires) and can therefore run in the CW and CCW directions as Three-phase motors do.
For the capacity of the capacitor, refer to the performance table. For the shape and dimensions of the capacitor, refer to page 546.

Wiring Diagram of IP65 Gearmotors with Brake

Connection Types and How to Select

Connection	How to Select	Inverter	Lifting Operation	Reduced Wiring	Braking Delay Time
(1) AC Switching (B)	This is the simplest method, and the motor can run simply by connecting the power supply line. This connection method requires fewer wires.	× (Unusable)	× (Unusable)	◎	△
(2) DC Switching	This connection method is optimal for applications requiring sudden braking, mainly for lifting operation, since it offers the shortest braking delay time.	○ (Usable)	◎ (Optimal)	△	◎
(3) AC Switching (A)	This connection method can separate the circuit between the motor and the brake and is optimal for driving with an inverter.	◎ (Optimal)	○ (Usable)	○	○

Note: The braking delay time is the time from the moment of turning off the switch to the start of braking, and is different from the braking time.
For the braking delay times caused by the different connection methods, refer to [Table-1] on page 569.
.If you require braking time information, refer to the material for calculating braking times on page 530.

MINI Series

■ Precautions for Wiring

- Please utilize DC switching when using the gearmotor for vertical operation (lifting).
- For a DC switching connection, please connect a surge suppressor (optional) between the contacts. For surge suppressors (optional), refer to page 589.
- In the case of a Single-phase 100 V gearmotor, the input voltage of rectifier A200-D90 (A100-D45) is 100 VAC, and the output voltage is 45 VDC.
- Use switches of 110 VDC with a contact point rating of DC13 to block the inductive load of the DC coil when using DC switching connection.
  For more details, please contact your nearest Sales Office or the CS Center.
  When using noncontact relays, use ones equivalent to a rated voltage of 240 VAC (a half-wave rectification load can open and close).
  * Contact rating class DC13 is a specification applicable to coil loads and a type defined in JIS C 8201-5-1 (Low-voltage switchgear and control gear).
- Please note that the rectifier contains a diode which will become unusable if it is shorted out due to, for example, improper wiring.
- For information and precautions involving the connection for using an inverter, refer to page 591.

Connection	3-phase 15 W to 90 W	1-phase 15 W to 90 W
(1) AC Switching (B)	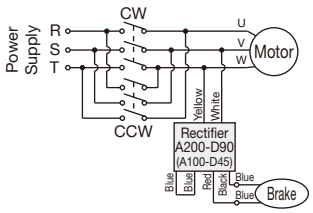 Short the blue-blue wire connection on the rectifier.	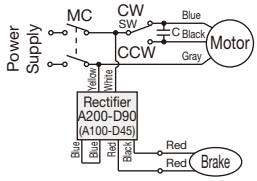 Short the blue-blue wire connection on the rectifier.
(2) DC Switching	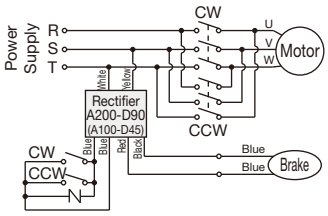	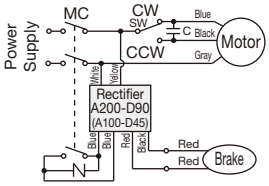
(3) AC Switching (A)	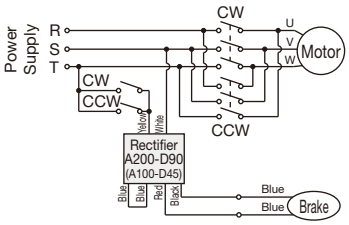 Short the blue-blue wire connection on the rectifier.	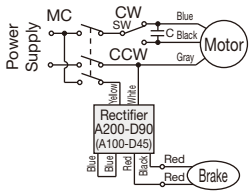 Short the blue-blue wire connection on the rectifier.

SW: CW/CCW Switch C: Capacitor MC: Magnetic Contactor -N- : Surge Suppressor (optional)

MID Series (3-Phase)

■ Gearmotors Connection (Brakemotors)

Connect the wires of a gearmotor with a brake as shown below. The rotational direction of the output shaft by the connection described below is shown in the performance table for each series.

* For more information about the voltage codes, refer to page 599.
* For the wiring diagrams of gearmotors without a brake, refer to page 547.

■ Precautions for Wiring

- Be sure to adopt “DC switching” when using the gearmotor for vertical operations (lifting).
- For a DC switching connection, please connect a surge suppressor (optional) between the contacts. For surge suppressors (optional), refer to page 589. (The varistor voltage is 423 V to 517 V in the case of a 200 V class brake or 820 V to 1000 V in the case of a 400 V class brake.)
- The brake voltage is 90 VDC in the case of a 200 V class brake and 180 VDC in the case of a 400 V class brake.
- The brake lead wires are the blue lead wires in the case of a 200 V class brake or the yellow lead wires in the case of a 400 V class brake.
- When adopting a DC switching connection, use a contactor with a contact capacity for 110 VDC <220 VDC> or contact rating class DC13 in order to shut down the inductive load (DC coil).
  Please contact us for more details.
  * Contact rating class DC13 is a specification applicable to coil loads and a type defined in JIS C 8201-5-1 (Low-voltage switchgear and control gear). * The items in < > are for 400 V class brakes.
- The rectifier contains a diode and will become unusable if it is shorted due to, for example, improper wiring. Please be cautious.
- For information and precautions involving the connection for using an inverter, refer to page 591.
- Please note that the power supply that can be used for type codes (supply voltage) “K”, “C”, “D”, “A” and “U”, (types that show both 200 V class and 400 V class voltages on the motor nameplate) is different depending on the brake voltage type.
  Gearmotors with a 200 V class brake (brake part number B2, J2, or V2: blue lead wires) can also be operated with 200 V class voltage.They cannot be operated with 400 V class voltage.
  Gearmotors with a 400 V class brake (brake part number B4, J4, or V4: yellow lead wires) can also be operated with 400 V class voltage.They cannot be operated with 200 V class voltage.

■ Lead Wires: 3 Lead Wires Type

Voltage Codes	NN	WN	EN	MA
Voltage/ Frequency	200 V/50 Hz, 200 V/60 Hz, 220 V/60 Hz	380 V/50 Hz, 400 V/50 Hz 400 V/60 Hz, 440 V/60 Hz	415 V/50 Hz, 440 V/50 Hz 480 V/60 Hz	575 V/60 Hz
AC Switching (B)	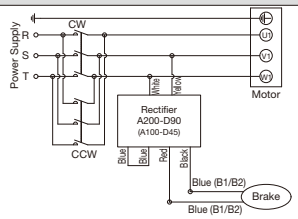 Short the blue-blue wire connection on the rectifier (A200-D90-UL).	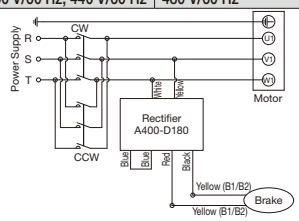 Short the blue-blue wire connection on the rectifier (A400-D180).		
AC Switching (A)	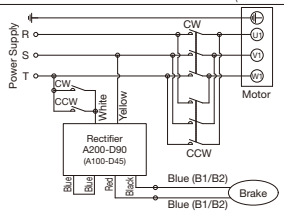 Short the blue-blue wire connection on the rectifier (A200-D90-UL).	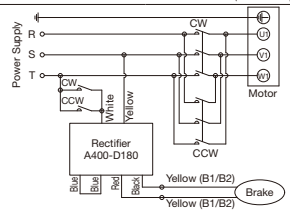 Short the blue-blue wire connection on the rectifier (A400-D180).		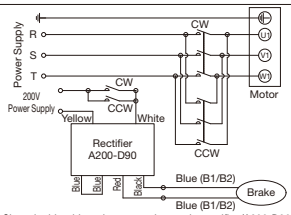 Short the blue-blue wire connection on the rectifier (A200-D90-UL).
DC Switching	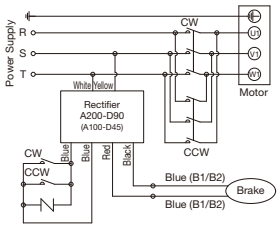 –N– : Surge Suppressor OP-ERZV10D471 (Optional)	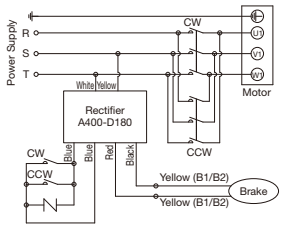 –N– : Surge Suppressor OP-ERZV10D911 (Optional)		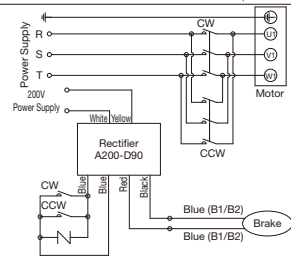 –N– : Surge Suppressor OP-ERZV10D471 (Optional)

Note: Use the included nuts for the connection.

Wiring Diagram of IP65 Gearmotors with Brake

■ Lead Wires: 6 Lead Wires Type

Voltage Codes	KN (Dual Voltage) CN (Dual Voltage) DN (Dual Voltage)	
Voltage/ Frequency	220 V/60 Hz, 220 V/50 Hz, 230 V/50 Hz	380 V/60 Hz, 380 V/50 Hz
AC Switching (B)	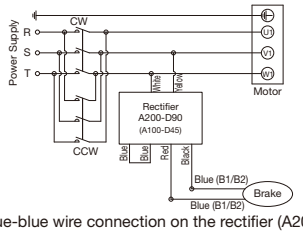 Short the blue-blue wire connection on the rectifier (A200-D90-UL).	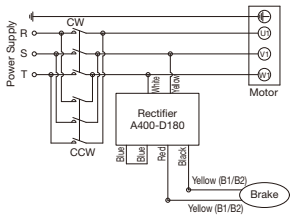 Short the blue-blue wire connection on the rectifier (A400-D180).
AC Switching (A)	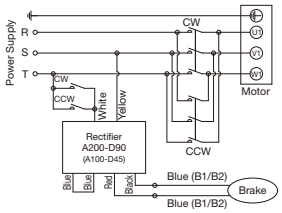 Short the blue-blue wire connection on the rectifier (A200-D90-UL).	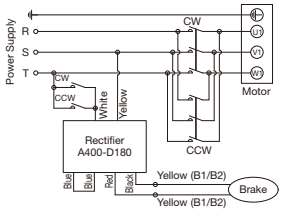 Short the blue-blue wire connection on the rectifier (A400-D180).
DC Switching	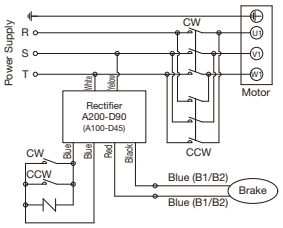 ⊣N⊢ : Surge Suppressor OP-ERZV10D471 (Optional)	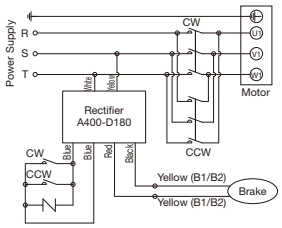 ⊣N⊢ : Surge Suppressor OP-ERZV10D911 (Optional)

Note: Use the included nuts for the connection.
Note: The B1 and B2 terminals are within the terminal box.

■ Lead Wires: 9 Lead Wires Type

Voltage Codes	AN (Dual Voltage) UN (Dual Voltage)	
Voltage/ Frequency	208 V/60 Hz, 230 V/60 Hz	460 V/60 Hz, 400 V/50 Hz
AC Switching (B)	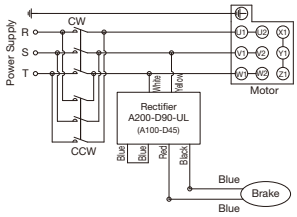 Short the blue-blue wire connection on the rectifier (A200-D90-UL).	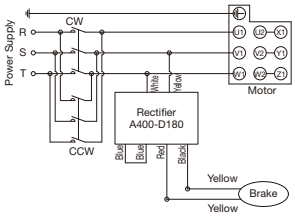 Short the blue-blue wire connection on the rectifier (A400-D180).
AC Switching (A)	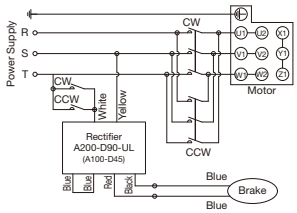 Short the blue-blue wire connection on the rectifier (A200-D90-UL).	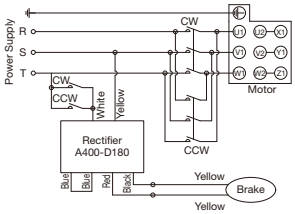 Short the blue-blue wire connection on the rectifier (A400-D180).
DC Switching	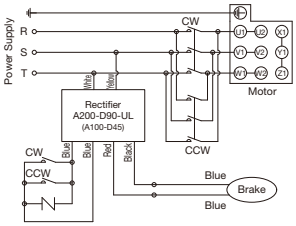 –N– : Surge Suppressor OP-ERZV10D471 (Optional)	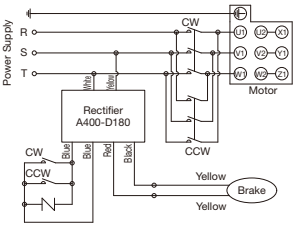 –N– : Surge Suppressor OP-ERZV10D911 (Optional)

Note: Use the included nuts and short board for the connection.
Note: The brake lead wires are drawn into the terminal box, but are not fixed to the terminal block.

Braking Delay Time: ta

The length of time (in seconds) it takes for the brake to activate after the motor is turned off.
(different from the braking time.)

■ Standard Motor

[Table-1]

Series	Number of Phases	Motor Power	DC Switching	AC Switching (A)	AC Switching (B)
MINI	3-Phase	15 W to 90 W	0.005 to 0.015	0.03 to 0.10	0.1 to 0.2
	1-Phase				
MID	3-Phase	0.1 kW to 0.75 kW	0.005 to 0.020	0.05 to 0.15	0.15 to 0.25
		1.5 kW to 2.2 kW	0.015 to 0.030	0.15 to 0.30	0.5 to 0.6
	1-Phase	0.1 kW to 0.2 kW	0.005 to 0.015	0.03 to 0.10	0.1 to 0.2
		0.4 kW	0.005 to 0.015	0.08 to 0.20	0.2 to 0.4

■ IP65 Motor

[Table-2]

Series	Number of Phases	Motor Power	DC Switching	AC Switching (A)	AC Switching (B)
MINI	3-Phase	15 W to 90 W	0.01 to 0.02	0.05 to 0.15	0.1 to 0.2
	1-Phase				
MID	3-Phase	0.1 kW to 0.75 kW	0.005 to 0.015	0.03 to 0.13	0.1 to 0.3

Terminal Box

A terminal box can be mounted. If required, please inform us when placing an order.

Standard Gearmotors

MINI Series

■ T Type Terminal Box

3-Phase 200 V and 400 V/1-Phase 100 V and 200 V

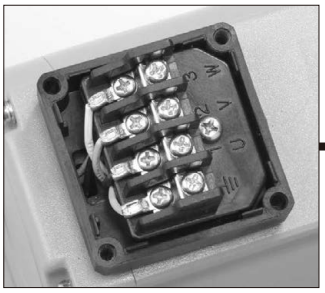

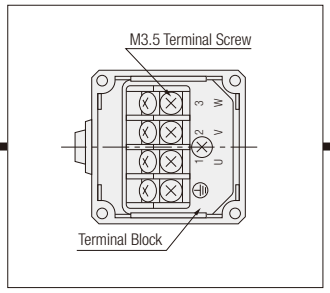

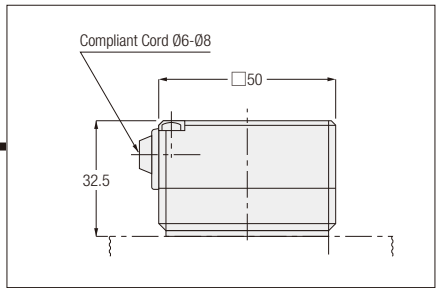

■ K Type Terminal Box

3-Phase 200 V and 400 V/1-Phase 100 V and 200 V

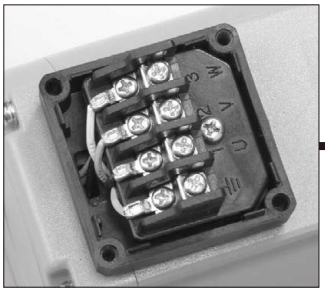

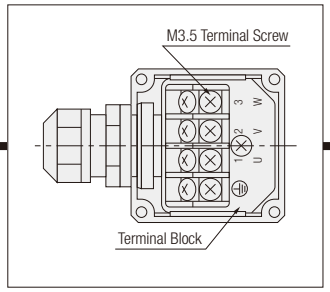

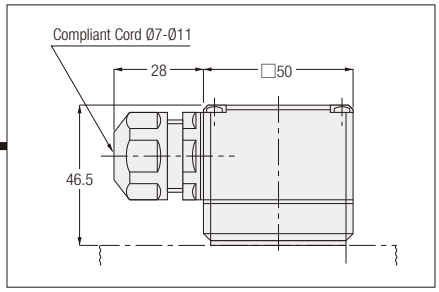

Note: A cable gland will be shipped in the product packaging. Attach the cable gland to the terminal box yourself.

MID Series (3-Phase)

■ Lead Wires: 3 Lead Wires Type

Terminal Box Details and Demensions

T Type Terminal Box Standard (Steel)

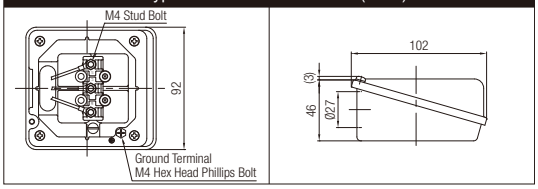

■ Lead Wires: 6 Lead Wires Type

Terminal Box Details and Demensions

T Type Terminal Box Standard (Steel)

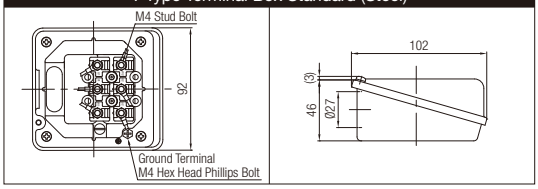

■ Lead Wires: 9 Lead Wires Type

Terminal Box Details and Demensions

T Type Terminal Box Standard (Steel)

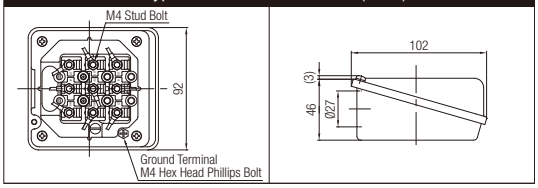

MID Series (1-Phase)

■ A Type Terminal Box (Aluminum)

1-Phase/Standard Voltage and High Voltage (200 V Class): 0.1 kW to 0.4 kW

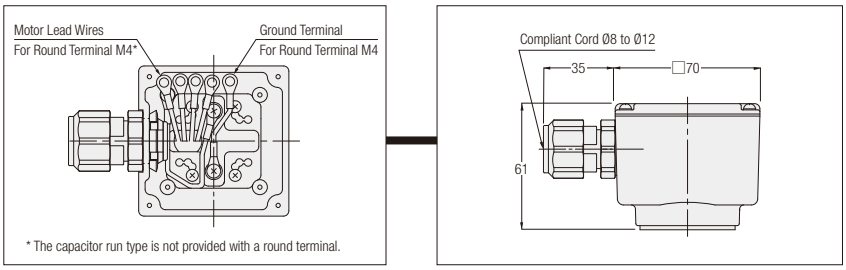

Note: The figure is a representative figure, and the shape of the terminals may differ.

Gearmotors with Brake

MINI Series

■ T Type Terminal Box

3-Phase 200 V and 400 V/1-Phase 100 V and 200 V

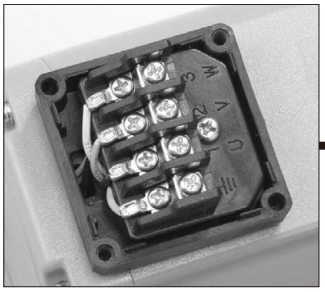

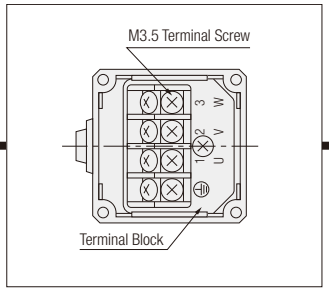

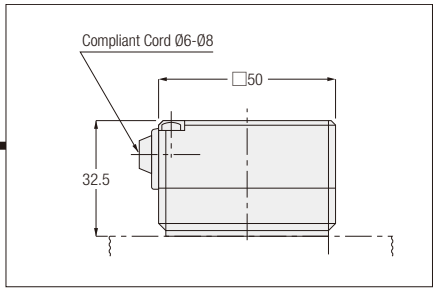

■ K Type Terminal Box

3-Phase 200 V and 400 V/1-Phase 100 V and 200 V

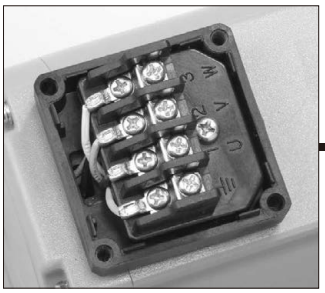

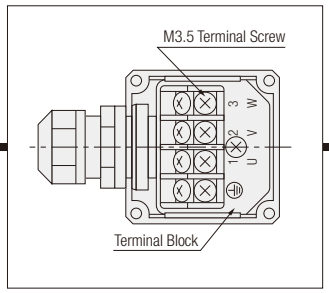

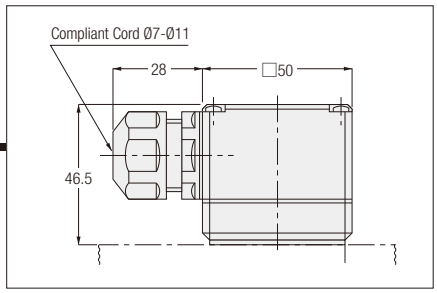

■ C Type Terminal Box (With Built-in Rectifier)

3-Phase 200 V and 400 V

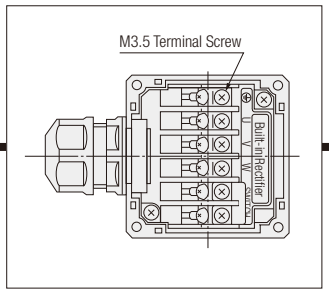

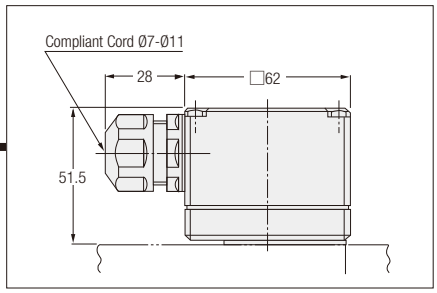

1-Phase 100 V and 200 V

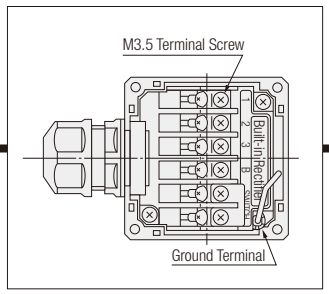

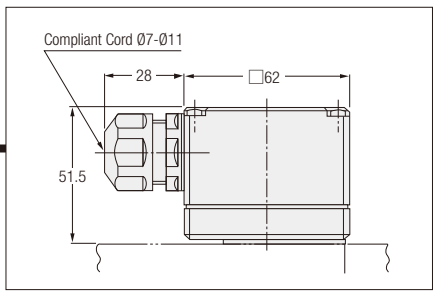

MID Series (3-Phase)

■ Terminal Box Structure and Outline Dimensions (Brakemotor)

The brake lead wires are drawn into the terminal box. The rectifier is not built in.
A rectifier can be contained in the switchboard or wired according to your specifications. A rectifier is included with the motor. Please select a connection method from the wiring diagram on pages 553 to 555 to connect the wires of the rectifier.

Gearmotor with Brake Terminal Box Details and Dimensions			
Type Codes (Supply Voltage) N, W, K, C, E, M		Type Code (Supply Voltage) A	
T Type Terminal Box Standard (Steel)		T Type Terminal Box Standard (Steel)	
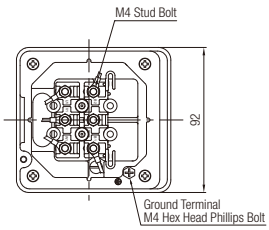 The brake lead wires are fixed to the terminal block (B1/B2).	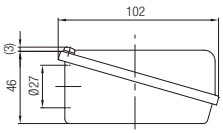	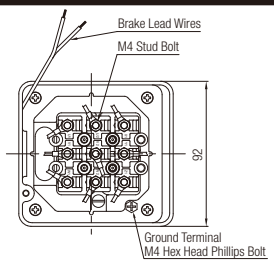 The brake lead wires are not fixed to the terminal block.	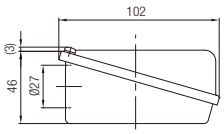

Note: For more information about the type codes (supply voltage), refer to page 599.

Note: When the type code (supply voltage) is “K” or “C,” please note that the available power supply is different depending on the brake voltage type.
A gearmotor with a 200 V class brake (brake model B2, J2, or V2: blue lead wires) can also be used with a 200 V class voltage. It cannot be operated with a 400 V class voltage.
A gearmotor with a 400 V class brake (brake model B4, J4, or V4: yellow lead wires) can also be used with a 400 V class voltage. It cannot be operated with a 200 V class voltage.

MID Series (1-Phase)

■ A Type Terminal Box (Aluminum)

1-Phase/Standard Voltage and High Voltage (200 V Class): 0.1 kW to 0.4 kW

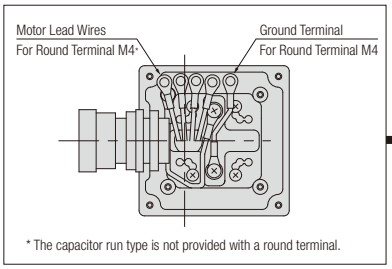

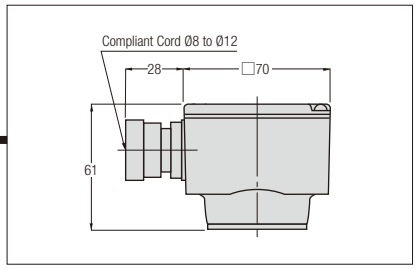

Note: The figure is a representative figure, and the shape of the terminals may differ.

MID Series (Clutch/Brake)

■ T Type Terminal Box (Steel Plate)

3-Phase/Standard Voltage: 0.1 kW to 0.75 kW

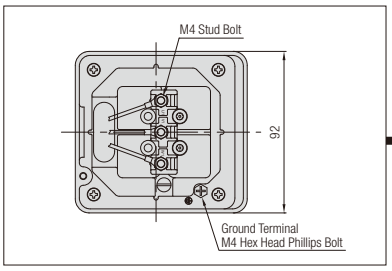

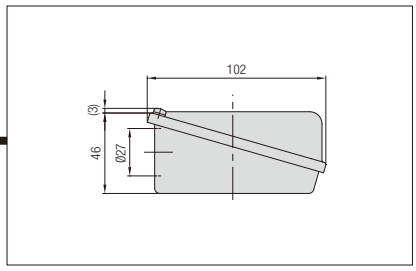

3-Phase/High Voltage (400 V Class): 0.1 kW to 0.75 kW

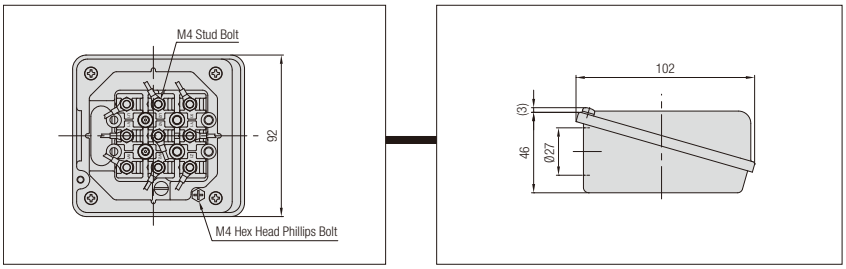

IP65 Gearmotors with Brake

MID Series

■ Terminal Box Structure and Outline Dimensions (Brakemotor)

The brake lead wires are drawn into the terminal box. The rectifier is not built in.
A rectifier can be contained in the switchboard or wired according to your specifications. A rectifier is included with the motor. Please select a connection method from the wiring diagram on pages 566 to 568 to connect the wires of the rectifier.

Gearmotor with Brake Terminal Box Details and Dimensions			
Type Codes (Supply Voltage) N, W, K, C, D, E, M		Type Code (Supply Voltage) A, U	
E Type Terminal Box IP65 (Aluminum)		E Type Terminal Box IP65 (Aluminum)	
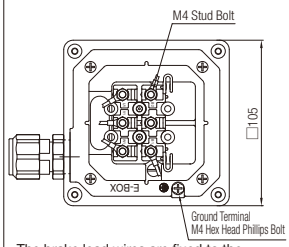 The brake lead wires are fixed to the terminal block (B1/B2).	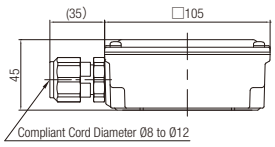	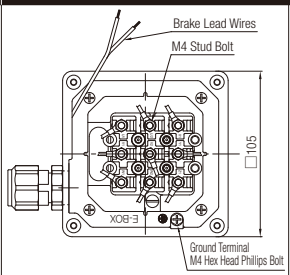 The brake lead wires are not fixed to the terminal block.	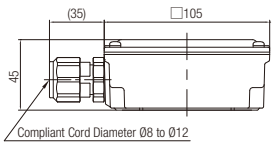

Note: For more information about the type codes (supply voltage), refer to page 599.

Note 1: When the type code (supply voltage) is “K”,“C”,“D”,“A”, or “U”, please note that the available power supply is different depending on the brake voltage type.
A gearmotor with a 200 V class brake (brake model B2, J2, or V2: blue lead wires) can also be used with a 200 V class voltage.
It cannot be operated with a 400 V class voltage.
A gearmotor with a 400 V class brake (brake model B4, J4, or V4: yellow lead wires) can also be used with a 400 V class voltage.
It cannot be operated with a 200 V class voltage.

Terminal Box Dimensions and Positions

MINI Series

Standard gearmotors are not provided with a terminal box.
A terminal box can be mounted if required. Please inform us when placing an order.

■ T Type Terminal Box

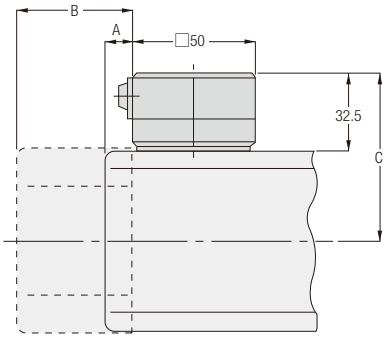

Type	Frame Size	A	B	C
G	12, 22	11.5	49.5	70.5
H	15, 22			
F2 (F2S)	12			
F2 (F2F)	15			
G	15, 28, 32	11.5	48	77.5
H	18, 28, 32			
F2 (F2S)	15			
F2 (F2F)	18			
G	18, 40	11.5	48.5	85.5
H	40			

Note 1: The A Type is not provided with a fan. The dimensions of the B Type are those of a gearmotor with a fan.

■ K Type Terminal Box

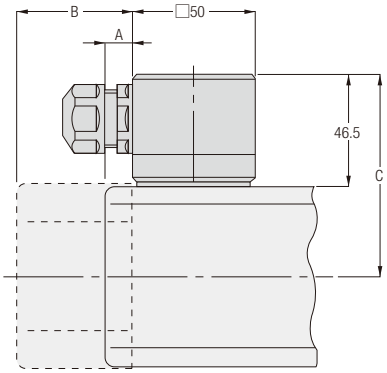

Type	Frame Size	A	B	C
G	12, 22	11.5	49.5	84.5
H	15, 22			
F2 (F2S)	12			
F2 (F2F)	15			
G	15, 28, 32	11.5	48	91.5
H	18, 28, 32			
F2 (F2S)	15			
F2 (F2F)	18			
G	18, 40	11.5	48.5	99.5
H	40			

Note 1: The A Type is not provided with a fan. The dimensions of the B Type are those of a gearmotor with a fan.

■ C Type Terminal Box (Only Gearmotors with Brake)

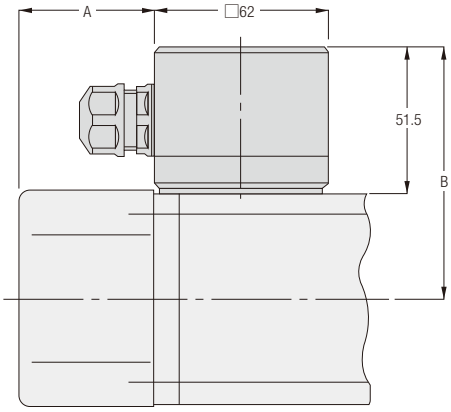

Type	Frame Size	A	B
G	12, 22	49.5	89.5
H	15, 22		
F2 (F2S)	12		
F2 (F2F)	15		
G	15, 28, 32	48	96.5
H	18, 28, 32		
F2 (F2S)	15		
F2 (F2F)	18		
G	18, 40	48.5	104.5
H	40		

Terminal Box Dimensions and Positions

MID Series (3-Phase) <G3 Type, GA Type, H2 Type>

A terminal box is provided as a standard item.

Common to G3, GA and H2

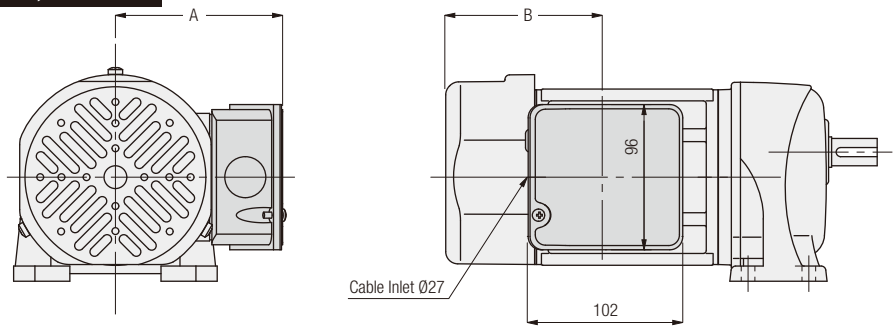

Motor Power	Box Type	Common through all Series			Positional Change of the Terminal Box
		A	B		
			Non-Brake	Brakemotor	
0.1 kW	T	110	52.5	92.5	90 ° Division
0.2 kW	T	110	52.5	103	90 ° Division
0.4 kW	T	117	85.5	105.5	90 ° Division
0.75 kW	T	128	96.5	115.5	90 ° Division
1.5 kW	T	139	108.5	137.5	90 ° Division
2.2 kW	T	149	109	138	90 ° Division

Note 1: The figure above illustrates the standard position of the terminal box. If you want to change the position of the terminal box, please inform us when placing an order. Refer to page 582.
Note 2: The figure is a representative figure, and the shape of the motor may differ.
Note 3: The GA type is available only for 0.4 kW to 2.2 kW.

Common to G3, GA and H2 (water-resistant specification)

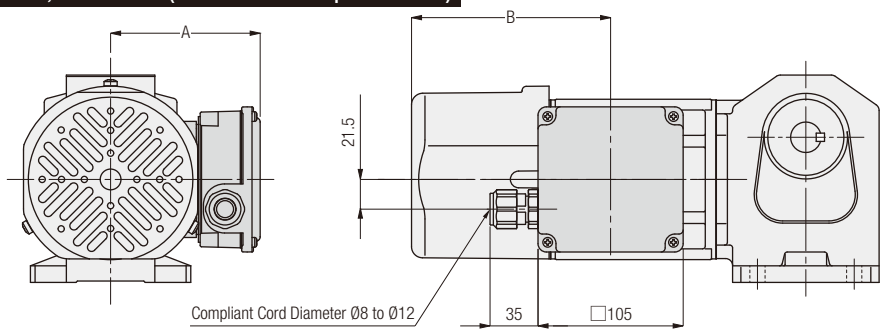

Motor Power	Box Type	Common through all Series			Positional Change of the Terminal Box
		A	B		
			Non-Brake	Brakemotor	
0.1 kW	E	108.5	53.5	115	90 ° Division
0.2 kW	E	108.5	53.5	144	90 ° Division
0.4 kW	E	115.5	85.5	146.5	90 ° Division
0.75 kW	E	126.5	96.5	155.5	90 ° Division
1.5 kW	E	137.5	108.5	–	90 ° Division
2.2 kW	E	147.5	109	–	90 ° Division

Note 1: The figure above illustrates the standard position of the terminal box. If you want to change the position of the terminal box, please inform us when placing an order. Refer to page 582.
Note 2: The figure is a representative figure, and the shape of the motor may differ.
Note 3: The GA type is available only for 0.4 kW to 2.2 kW.

MID Series (3-Phase) <F Type, FA Type, F3 Type>

A terminal box is provided as a standard item.

Common to F, FA and F3

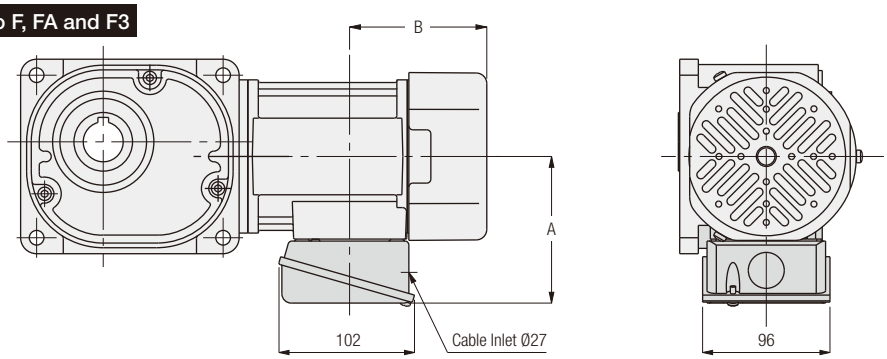

Motor Power	Box Type	Common through all Series			Positional Change of the Terminal Box
		A	B		
			Non-Brake	Brakemotor	
0.1 kW	T	110	52.5	92.5	90 ° Division
0.2 kW	T	110	52.5	103	90 ° Division
0.4 kW	T	117	85.5	105.5	90 ° Division
0.75 kW	T	128	96.5	115.5	90 ° Division
1.5 kW	T	139	108.5	137.5	90 ° Division
2.2 kW	T	149	109	138	90 ° Division

Note 1: The figure above illustrates the standard position of the terminal box. If you want to change the position of the terminal box, please inform us when placing an order. Refer to page 583.
Note 2: The figure is a representative figure, and the shape of the motor may differ.
Note 3: The FA type is available only for 0.4 kW to 2.2 kW.

Common to F, FA and F3 (water-resistant specification)

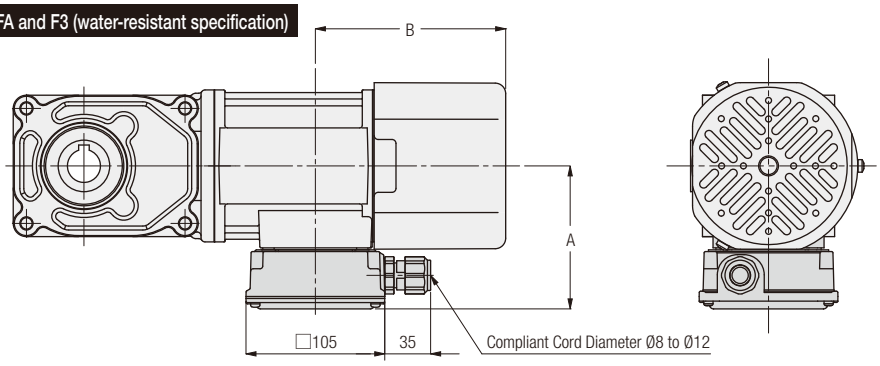

Motor Power	Box Type	Common through all Series			Positional Change of the Terminal Box
		A	B		
			Non-Brake	Brakemotor	
0.1 kW	E	108.5	53.5	115	90 ° Division
0.2 kW	E	108.5	53.5	144	90 ° Division
0.4 kW	E	115.5	85.5	146.5	90 ° Division
0.75 kW	E	126.5	96.5	155.5	90 ° Division
1.5 kW	E	137.5	108.5	–	90 ° Division
2.2 kW	E	147.5	109	–	90 ° Division

Note 1: The figure above illustrates the standard position of the terminal box. If you want to change the position of the terminal box, please inform us when placing an order. Refer to page 583.
Note 2: The figure is a representative figure, and the shape of the motor may differ.
Note 3: The FA type is available only for 0.4 kW to 2.2 kW.

Terminal Box Dimensions and Positions

MID Series (1-Phase) <G3 Type, GA Type, H2 Type>

A terminal box is provided as a standard item.

Common to G3, GA and H2

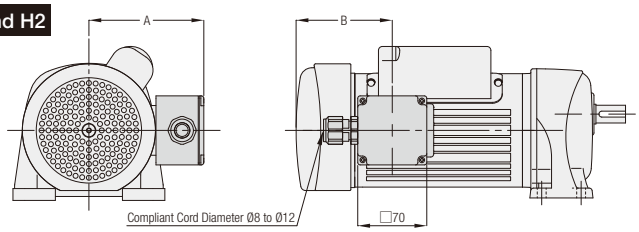

Motor Power	Box Type	Common through all Series			Positional Change of the Terminal Box
		A	B		
			Non-Brake	Brakemotor	
0.1 kW	A	116.5	50 (85) (Note 1)	100.5 (87.5) (Note 1)	90 ° Division
0.2 kW	A	116.5	87	97.5	90 ° Division
0.4 kW	A	131.5	110.5	119	90 ° Division

Note 1: The values in parentheses ( ) represent the H2 type.
Note 2: The figure above illustrates the standard position of the terminal box. If you want to change the position of the terminal box, please inform us when placing an order. Refer to page 584.
Note 3: The figure is a representative figure, and the shape of the motor and that of the fan cover may differ.
Note 4: The GA type is available only for 0.4 kW .

MID Series (1-Phase) <F Type, FA Type, F3 Type>

Common to F, FA and F3

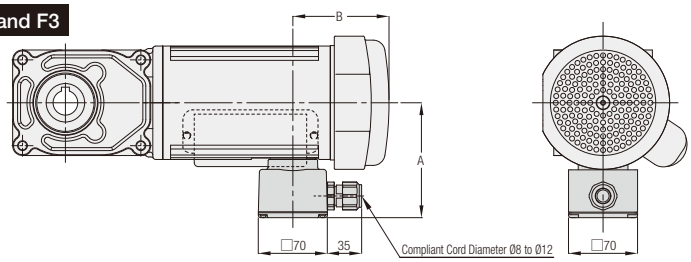

Motor Power	Box Type	Common through all Series			Positional Change of the Terminal Box
		A	B		
			Non-Brake	Brakemotor	
0.1 kW	A	116.5	85	87.5	90 ° Division
0.2 kW	A	116.5	87	97.5	90 ° Division
0.4 kW	A	131.5	110.5	119	90 ° Division

Note 1: The figure above illustrates the standard position of the terminal box. If you want to change the position of the terminal box, please inform us when placing an order. Refer to page 585.
Note 2: The figure is a representative figure, and the shape of the motor and that of the fan cover may differ.
Note 3: The FA type is available only for 0.4 kW.

MID Series (Clutch/Brake) <G3 Type, H2 Type>

A terminal box is provided as a standard item.

Common to G3 and H2

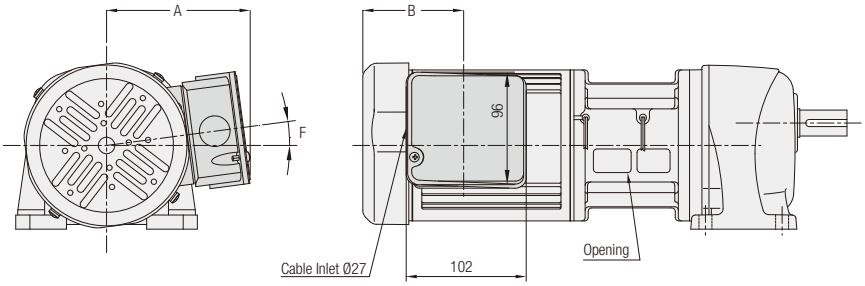

Motor Power	Box Type	Common through all Series			Positional Change of the Terminal Box
		A	B	F	
0.1 kW	T	110	52.5	0 °	90 ° Division
0.2 kW	T	110	52.5	0 °	90 ° Division
0.4 kW	T	121	85.5	7.5 °	90 ° Division
0.75 kW	T	132	96.5	7.5 °	90 ° Division

Note 1: The figure above illustrates the standard position of the terminal box. If you require a change the position of the terminal box, please inform us upon placing an order. Refer to page 584.
Note 2: The figure is a representative figure, and the shape of the motor and that of the fan cover may differ.
Note 3: If the position of the terminal box is changed, the clutch lead wire will be set in the same position and direction as the terminal box. Make sure no foreign substances etc. enter the opening of the clutch brake.

Positional Change of the Terminal Box

How to instruct change of: Lead wire type, position of the terminal box or the cabtyre cable

If you want to use lead wires, a terminal box, and cabtyre cables (water-resistant specification) in positions other than the standard mounting positions, you may order the change with the appropriate code shown in the table below.

Model name example:GLM-12-20-T25 ⇒ T (Lower) Hole (Load-side) GLM-12-20-T25XT6H3

MINI Series

■ Order Method

Standard Specification		Water Resistant Specification	
Lead Wire Type/With Terminal Box		Cabtyre Cable Type	
Change of the lead wire box position		Changes of the cable position and the cable lead-in position	
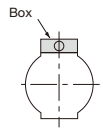 Standard	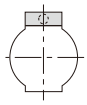 Hole (Load-side)	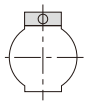 Standard	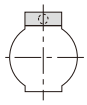 Hole (Load-side)
Standard	H3	Standard	H3
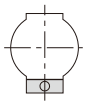 T (Lower)	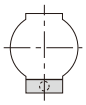 T (Lower) Hole (Load-side)	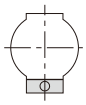 T (Lower)	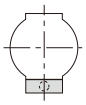 T (Lower) Hole (Load-side)
T6	T6 H3	T6	T6 H3

● G Type

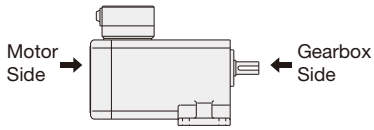

● H Type

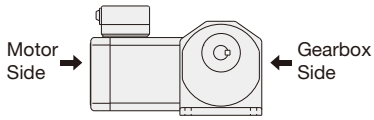

Note 1: All diagrams are viewed from the motor side of the gearmotor.
Note 2: No option specification required for standard models.
Note 3: It is not necessary to designate the position of the T shaft for F2S (right angle hollow bore) and for F2F (right angle shaft) because they are symmetrical in design. (double flange mount).

● Definition of Designations

- "T" represents the lead wire, terminal box, or cabtyre cable.
- "Hole" represents a cabtyre cable inlet.

Regarding changes of the lead wire type and the position of the terminal box of the F2 Type F2F (right angle shaft)

The L shaft of the F2F (concentric right angle shaft) is as shown in [Figure-1]. The F2 type is designed for concentric flange mounting on both sides, and the output shaft can therefore be positioned on the right side as shown in [Figure-2] by rotating the gearmotor to 180 °. In this case, however, the lead wires will be in the lower position. If you want to set the lead wires in the upper position for the convenience of use, you may place an order for the lead wire at the lower position (option code "T6") for a standard product [Figure-1]. By rotating the gearmotor to 180 ° in this state, the output shaft will be positioned on the right side with the lead wires in the upper position. This also applies to gearmotors with a terminal box.

Figure when viewed from the motor side

When the output shaft is an L shaft and the lead wires are in the upper position, the output shaft is on the left side when viewed from the motor side.

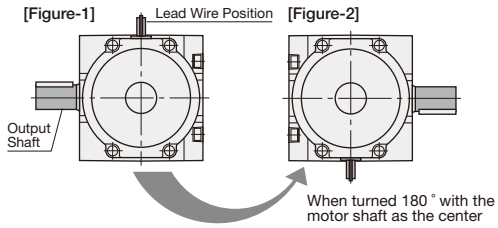

Method for Ordering a Positional Change of the Terminal Box

MID Series (3-Phase) <G3 Type, GA Type, H2 Type>

If you use the terminal box in a position other than the standard position, you may order the change with the appropriate code shown in the table below.

Model name example: Standard specification G3L28N30-MM04TNNTB2 ⇒ T (Upper) Hole (Right) G3L28N30-MM04TNNTB2XTZH6

* The specifications marked with ▲ do not support some models. For more information, please see the precautions of Positional Change of the Terminal Box on page 586.

■ Order Method

	Motor Power 3-Phase 0.1 kW/0.2 kW				Motor Power 3-Phase 0.4 kW to 2.2 kW			
Design	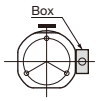 Standard	Hole (Lower)	Hole (Load-side)	Hole (Upper)	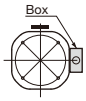 Standard	Hole (Lower)	Hole (Load-side)	Hole (Upper)
Option Code	Standard	H6	H3 ▲	HZ	Standard	H6	H3	HZ
Design	T (Upper)	T (Upper) Hole (Right)	T (Upper) Hole (Load-side)	T (Upper) Hole (Left)	T (Upper)	T (Upper) Hole (Right)	T (Upper) Hole (Load-side)	T (Upper) Hole (Left)
Option Code	TZ	TZ H6	TZ H3 ▲	TZ HZ	TZ	TZ H6	TZ H3	TZ HZ
Design	T (Left)	T (Left) Hole (Upper)	T (Left) Hole (Load-side)	T (Left) Hole (Lower)	T (Left)	T (Left) Hole (Upper)	T (Left) Hole (Load-side)	T (Left) Hole (Lower)
Option Code	T9	T9 H6	T9 H3 ▲	T9 HZ	T9	T9 H6	T9 H3	T9 HZ
Design	T (Lower)	T (Lower) Hole (Left)	T (Lower) Hole (Load-side)	T (Lower) Hole (Right)	T (Lower)	T (Lower) Hole (Left)	T (Lower) Hole (Load-side)	T (Lower) Hole (Right)
Option Code	T6 ▲	T6 H6 ▲	T6 H3 ▲	T6 HZ ▲	T6 ▲	T6 H6 ▲	T6 H3 ▲	T6 HZ ▲

Note 1: All diagrams are viewed from the motor side of the gearmotor.
Note 2: No option specification required for standard models.
Note 3: Please note that structurally, the terminal box's position cannot be changed by the customer. If you require a change in position of the terminal box, be sure to place an order with the appropriate code shown in the figure above.
Note 4: For only 0.2 kW G3 Type with frame size 28, the terminal box will be displaced by 17 degrees from the center in the clockwise direction when its position is "TZ (upper)" or "T6 (lower)." Please note that the terminal box will not be positioned on the top or bottom face.
Note 5: The bold line ▬ indicates the attachment position of the nameplate. Please note that depending on the mounting position/orientation, the nameplate may be difficult to see. If the attachment position is inconvenient, the nameplate may be attached at a different position upon request. For more details, please contact your nearest Sales Office or the CS Center.
Note 6: The GA type is available only for 0.4 kW to 2.2 kW.

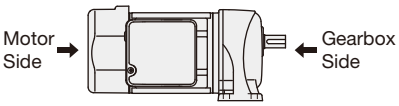

- The gearbox side hole and the motor side hole will always be set in the positions "3" and "9," respectively, regardless of the position of the terminal box.

● Definition of Designations

- "T" represents the terminal box.
- "Hole" represents the power supply inlet hole.

Positional Change of the Terminal Box

MID Series (3-Phase) <F Type, FA Type, F3 Type>

If you use the terminal box in a position other than the standard position, you may order the change with the appropriate code shown in the table below.

Model name example: Standard specification F3S25N30-MM02TNNTB2 ⇒ T (Upper) Hole (Right) F3S25N30-MM02TNNTB2XTZH6

*The specifications marked with ▲ do not support some F Type models. Please note that for some models of the F3 Type, the cable outlet is close to the mounting surface, and must be checked in advance. For more information, please see the precautions of Positional Change of the Terminal Box on page 586.

■ Order Method

	Motor Power 3-Phase 0.1 kW/0.2 kW				Motor Power 3-Phase 0.4 kW to 2.2 kW			
Design	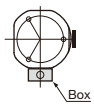 Box Standard	Hole (Left)	Hole (Load-side)	Hole (Right)	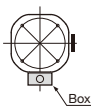 Box Standard	Hole (Left)	Hole (Load-side)	Hole (Right)
Option Code	Standard	H6	H3	HZ	Standard	H6	H3	HZ
Design	T (Right)	T (Right) Hole (Lower)	T (Right) Hole (Load-side)	T (Right) Hole (Upper)	T (Right)	T (Right) Hole (Lower)	T (Right) Hole (Load-side)	T (Right) Hole (Upper)
Option Code	T3	T3 H6	T3 H3 ▲	T3 HZ	T3	T3 H6	T3 H3	T3 HZ
Design	T (Upper)	T (Upper) Hole (Right)	T (Upper) Hole (Load-side)	T (Upper) Hole (Left)	T (Upper)	T (Upper) Hole (Right)	T (Upper) Hole (Load-side)	T (Upper) Hole (Left)
Option Code	TZ	TZ H6	TZ H3	TZ HZ	TZ	TZ H6	TZ H3	TZ HZ
Design	T (Left)	T (Left) Hole (Upper)	T (Left) Hole (Load-side)	T (Left) Hole (Lower)	T (Left)	T (Left) Hole (Upper)	T (Left) Hole (Load-side)	T (Left) Hole (Lower)
Option Code	T9	T9 H6	T9 H3 ▲	T9 HZ	T9	T9 H6	T9 H3	T9 HZ

Note 1: All diagrams are viewed from the motor side of the gearmotor.
Note 2: No option specification required for standard models.
Note 3: Please note that structurally, the terminal box's position cannot be changed by the customer. If you require a change in position of the terminal box, be sure to place an order with the appropriate code shown in the figure above.
Note 4: The bold line ▬ indicates the attachment position of the nameplate. Please note that depending on the mounting position/orientation, the nameplate may be difficult to see. If the attachment position is inconvenient, the nameplate may be attached at a different position upon request. For more details, please contact your nearest Sales Office or the CS Center.
Note 5: The FA type is available only for 0.4 kW to 2.2 kW.

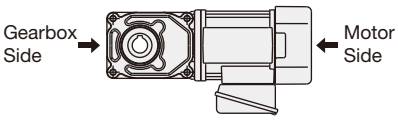

- The gearbox side hole and the motor side hole will always be set in the positions "3" and "9," respectively, regardless of the position of the terminal box.

● Definition of Designations

- "T" represents the terminal box.
- "Hole" represents the power supply inlet hole.

MID Series (Clutch/Brake, 1-Phase) <G3 Type, GA Type, H2 Type>

If you use the terminal box in a position other than the standard position, you may order the change with the appropriate code shown in the table below.

Model name example: Standard specification G3L28N30-EM04TNJTN ⇒ T (Upper) Hole (Right) G3L28N30-EM04TNJTN<u>XTZH6</u>

■ Order Method

	Motor Power 3-Phase 0.1 kW/0.2 kW 1-Phase 0.1 kW/0.2 kW				Motor Power 3-Phase 0.4 kW/0.75 kW 1-Phase 0.4 kW			
Design	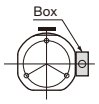 Standard	Hole (Lower)	Hole (Load-side)	Hole (Upper)	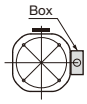 Standard	Hole (Lower)	Hole (Load-side)	Hole (Upper)
Option Code	Standard	H6	H3	HZ	Standard	H6	H3	HZ
Design	T (Upper)	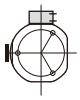 T (Upper) Hole (Right)	T (Upper) Hole (Load-side)	T (Upper) Hole (Left)	T (Upper)	T (Upper) Hole (Right)	T (Upper) Hole (Load-side)	T (Upper) Hole (Left)
Option Code	TZ	TZ H6	TZ H3	TZ HZ	TZ	TZ H6	TZ H3	TZ HZ
Design	T (Left)	T (Left) Hole (Upper)	T (Left) Hole (Load-side)	T (Left) Hole (Lower)	T (Left)	T (Left) Hole (Upper)	T (Left) Hole (Load-side)	T (Left) Hole (Lower)
Option Code	T9	T9 H6	T9 H3	T9 HZ	T9	T9 H6	T9 H3	T9 HZ
Design	T (Lower)	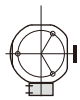 T (Lower) Hole (Left)	T (Lower) Hole (Load-side)	T (Lower) Hole (Right)	T (Lower)	T (Lower) Hole (Left)	T (Lower) Hole (Load-side)	T (Lower) Hole (Right)
Option Code	T6	T6 H6	T6 H3	T6 HZ	T6	T6 H6	T6 H3	T6 HZ

Note 1: All diagrams are viewed from the motor side of the gearmotor.
Note 2: No option specification required for standard models.
Note 3: Please note that structurally, the terminal box's position cannot be changed by the customer. If you require a change in position of the terminal box, be sure to place an order with the appropriate code shown in the figure above.
Note 4: For only 0.2 kW G3 Type with frame size 28, the terminal box will be displaced by 17 degrees from the center in the clockwise direction when its position is "TZ (upper)" or "T6 (lower)." Please note that the terminal box will not be positioned on the top or bottom face.
Note 5: The bold line ━ indicates the attachment position of the nameplate. Please note that depending on the mounting position/orientation, the nameplate may be difficult to see. If the attachment position is inconvenient, the nameplate may be attached at a different position upon request. For more details, please contact your nearest Sales Office or the CS Center.
Note 6: Single-phase capacitor start type rotates alongside with the terminal box. Check the device etc. for interference in advance. For more details, please contact your nearest Sales Office or the CS Center.
Note 7: The GA type is available only in single-phase 0.4 kW.

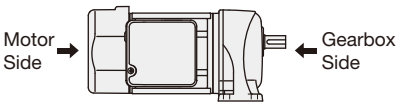

- The gearbox side hole and the motor side hole will always be set in the positions "3" and "9," respectively, regardless of the position of the terminal box.

● Definition of Designations

- "T" represents the terminal box.
- "Hole" represents the power supply inlet hole.

Positional Change of the Terminal Box

MID Series (1-Phase) <F Type, FA Type, F3 Type>

If you use the terminal box in a position other than the standard position, you may order the change with the appropriate code shown in the table below.

Model name example: Standard specification F3S25N30-MM02CNJAB2 ⇒ T (Upper) Hole (Right) F3S25N30-MM02CNJAB2XTZH6

■ Order Method

	Motor Power 1-Phase 0.1 kW/0.2 kW				Motor Power 1-Phase 0.4 kW			
Design	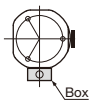 Box Standard	 Hole (Left)	 Hole (Load-side)	 Hole (Right)	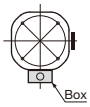 Box Standard	 Hole (Left)	 Hole (Load-side)	 Hole (Right)
Option Code	Standard	H6	H3	HZ	Standard	H6	H3	HZ
Design	 T (Right)	 T (Right) Hole (Lower)	 T (Right) Hole (Load-side)	 T (Right) Hole (Upper)	 T (Right)	 T (Right) Hole (Lower)	 T (Right) Hole (Load-side)	 T (Right) Hole (Upper)
Option Code	T3	T3 H6	T3 H3	T3 HZ	T3	T3 H6	T3 H3	T3 HZ
Design	 T (Upper)	 T (Upper) Hole (Right)	 T (Upper) Hole (Load-side)	 T (Upper) Hole (Left)	 T (Upper)	 T (Upper) Hole (Right)	 T (Upper) Hole (Load-side)	 T (Upper) Hole (Left)
Option Code	TZ	TZ H6	TZ H3	TZ HZ	TZ	TZ H6	TZ H3	TZ HZ
Design	 T (Left)	 T (Left) Hole (Upper)	 T (Left) Hole (Load-side)	 T (Left) Hole (Lower)	 T (Left)	 T (Left) Hole (Upper)	 T (Left) Hole (Load-side)	 T (Left) Hole (Lower)
Option Code	T9	T9 H6	T9 H3	T9 HZ	T9	T9 H6	T9 H3	T9 HZ

Note 1: All diagrams are viewed from the motor side of the gearmotor.
Note 2: No option specification required for standard models.
Note 3: Please note that structurally, the terminal box's position cannot be changed by the customer. If you require a change in position of the terminal box, be sure to place an order with the appropriate code shown in the figure above.
Note 4: The bold line ▬ indicates the attachment position of the nameplate. Please note that depending on the mounting position/orientation, the nameplate may be difficult to see. If the attachment position is inconvenient, the nameplate may be attached at a different position upon request. For more details, please contact your nearest Sales Office or the CS Center.
Note 5: Single-phase capacitor start type rotates alongside with the terminal box. Check the device etc. for interference in advance. For more details, please contact your nearest Sales Office or the CS Center.
Note 6: The FA type is available only for 0.4 kW.

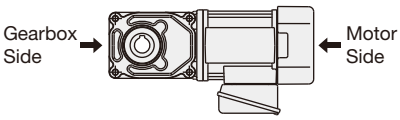

- The gearbox side hole and the motor side hole will always be set in the positions "3" and "9," respectively, regardless of the position of the terminal box.

● Definition of Designations

- "T" represents the terminal box.
- "Hole" represents the power supply inlet hole.

Precautions about the Positional Change of the Terminal Box

MID Series (3-Phase)

■ Specifications that do not allow the position of the terminal box to be changed

The specifications shown below do not allow the position of the terminal box and the direction of the holes to be changed. Please take note.
For more information, please contact your nearest Sales Office or the CS Center.

Option Code	Mounting Type	Frame Size	Motor Power	Terminal Box Type
H3 Hole (Load-side)	G3L	28	0.2 kW	T-BOX/E-BOX
	G3L	32	0.4 kW	E-BOX
	G3F	28	0.2 kW	T-BOX/E-BOX
	G3F	32	0.4 kW	E-BOX
	G3K	28	0.2 kW	T-BOX/E-BOX
	G3K	32	0.4 kW	E-BOX
	H2F	22	0.1 kW	T-BOX/E-BOX
	H2F	22	0.2 kW	E-BOX
	FS	30	0.1 kW	E-BOX
	FS	35	0.1 kW	E-BOX
	FS	45	0.2 kW	E-BOX
T3H3 T (Right) Hole (Load-side)	F3S	20	0.2 kW	E-BOX
T6 T (Lower)	G3L	28	0.2 kW	T-BOX/E-BOX
	G3L	32	0.4 kW	E-BOX
T6H3 T (Lower) Hole (Load-side)	G3L	18	0.1 kW	T-BOX/E-BOX
	G3L	18	0.2 kW	T-BOX/E-BOX
	G3L	22	0.1 kW	T-BOX/E-BOX
	G3L	22	0.2 kW	E-BOX
	G3L	28	0.1 kW	T-BOX/E-BOX
	G3L	28	0.2 kW	T-BOX/E-BOX
	G3L	28	0.4 kW	E-BOX
	G3L	32	0.1 kW	T-BOX/E-BOX
	G3L	32	0.2 kW	E-BOX
	G3L	32	0.4 kW	T-BOX/E-BOX
	G3L	40	0.2 kW	E-BOX
	G3F	28	0.1 kW	E-BOX
	G3F	28	0.2 kW	T-BOX/E-BOX
	G3F	32	0.1 kW	E-BOX
	G3F	32	0.2 kW	E-BOX
	G3F	32	0.4 kW	E-BOX
	G3F	40	0.2 kW	E-BOX
	G3K	28	0.1 kW	E-BOX
	G3K	28	0.2 kW	T-BOX/E-BOX

Option Code	Mounting Type	Frame Size	Motor Power	Terminal Box Type
T6H3 T (Lower) Hole (Load-side)	G3K	32	0.1 kW	E-BOX
	G3K	32	0.2 kW	E-BOX
	G3K	32	0.4 kW	E-BOX
	H2L	22	0.1 kW	T-BOX/E-BOX
	H2L	22	0.2 kW	E-BOX
	H2L	28	0.1 kW	E-BOX
	H2L	28	0.2 kW	T-BOX/E-BOX
	H2L	32	0.1 kW	E-BOX
	H2L	32	0.2 kW	E-BOX
	H2L	32	0.4 kW	E-BOX
	H2L	40	0.2 kW	E-BOX
T6H6 T (Lower) Hole (Left)	G3L	28	0.2 kW	E-BOX
	G3L	32	0.4 kW	E-BOX
T6HZ T (Lower) Hole (Right)	G3L	28	0.2 kW	E-BOX
	G3L	32	0.4 kW	E-BOX
T9H3 T (Left) Hole (Load-side)	G3L	22	0.1 kW	E-BOX
	G3L	28	0.2 kW	T-BOX/E-BOX
	G3L	32	0.4 kW	E-BOX
	G3F	28	0.2 kW	T-BOX/E-BOX
	G3F	32	0.4 kW	E-BOX
	G3K	28	0.2 kW	T-BOX/E-BOX
	G3K	32	0.4 kW	E-BOX
	FS	25	0.1 kW	T-BOX/E-BOX
	FS	30	0.2 kW	E-BOX
	FF	22	0.1 kW	T-BOX/E-BOX
TZH3 T (Upper) Hole (Load-side)	G3L	28	0.2 kW	T-BOX/E-BOX
	G3L	32	0.4 kW	E-BOX
	G3F	22	0.1 kW	E-BOX
	G3F	28	0.2 kW	T-BOX/E-BOX
	G3F	32	0.4 kW	E-BOX
	G3K	28	0.2 kW	T-BOX/E-BOX
	G3K	32	0.4 kW	E-BOX
	H2L	28	0.2 kW	E-BOX

Precautions about the positional change of the terminal box and the manual release lever

MID Series Manual Release Device

■ Specifications that do not allow the position of the terminal box to be changed

Option Code	Mounting Type	Frame Size	Motor Power	Terminal Box Type
T9R6 T (Left) Manual (Lower)	G3L	28	0.4 kW	T-BOX
	H2L	28	0.4 kW	T-BOX

Positional Change of the Terminal Box

MID Series (3-Phase)

■ Specifications that need to be checked in advance when changing the position of the terminal box

With regard to the model specifications shown below, the cable outlet is located near the mounting surface. Please check the mounting position, the area around the lead wire outlet, etc. in advance.
For more information, please contact your nearest Sales Office or the CS Center.

Option Code	Mounting Type	Frame Size	Motor Power	Terminal Box Type
T3H3 T (Right) Hole (Load-side)	FS	25	3-Phase 0.1 kW	T-BOX/E-BOX
	FF	22	3-Phase 0.1 kW	T-BOX/E-BOX
	F3S	20	3-Phase 0.1 kW	T-BOX/E-BOX
	F3S	25	3-Phase 0.1 kW	T-BOX/E-BOX
	F3F	18	3-Phase 0.1 kW	T-BOX/E-BOX
	F3F	22	3-Phase 0.1 kW	T-BOX/E-BOX
T9H3 T (Left) Hole (Load-side)	F3S	20	3-Phase 0.1 kW	T-BOX/E-BOX
	F3S	25	3-Phase 0.1 kW	T-BOX/E-BOX
	F3F	18	3-Phase 0.1 kW	T-BOX/E-BOX
	F3F	22	3-Phase 0.1 kW	T-BOX/E-BOX
	F3S	20	3-Phase 0.2 kW	T-BOX/E-BOX
	F3S	25	3-Phase 0.2 kW	T-BOX/E-BOX
	F3F	18	3-Phase 0.2 kW	T-BOX/E-BOX
	F3F	22	3-Phase 0.2 kW	T-BOX/E-BOX

Dimensions Required for Removing the Fan Cover and the Brake Cover

Each of the figures below shows the space required to adjust the gap of the brake in the installed state, and the dimension required to remove the fan cover or the brake cover.
* Keep a distance of 20 mm or more between the motor and the wall surface to secure air ventilation.

MINI Series

■ Indoor Specification

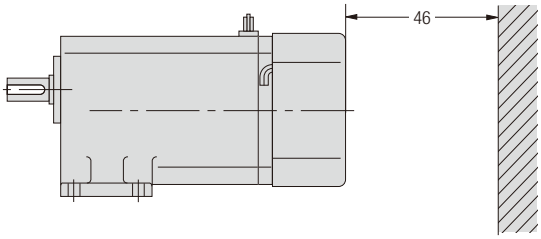

■ Water-resistant Specification

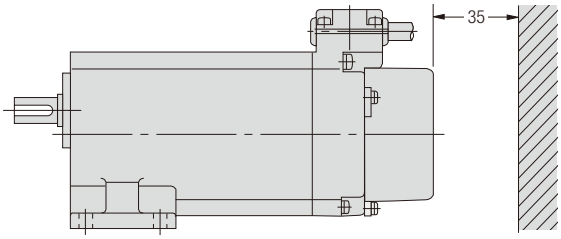

MID Series

■ Indoor Specification

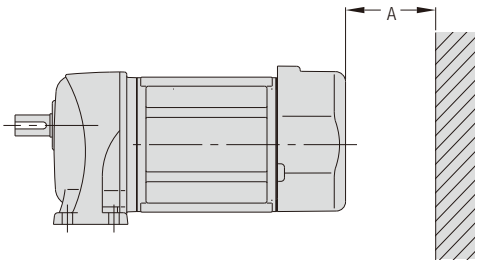

Type	3-Phase						1-Phase			
	0.1 kW	0.2 kW	0.4 kW	0.75 kW	1.5 kW	2.2 kW	100 W	100 W	200 W	400 W
G3/GA	44	59	56	59	90	90	–	59	59	59
H2	44	59	56	59	90	90	44	–	59	59
F/FA	44	59	56	59	90	90	44	–	59	59
F3	44	59	56	59	90	90	44	–	59	59

Note 1: The FA type is available only for 3-phase 0.4 kW to 2.2 kW and 1-phase 400 W.

■ Water-resistant Specification

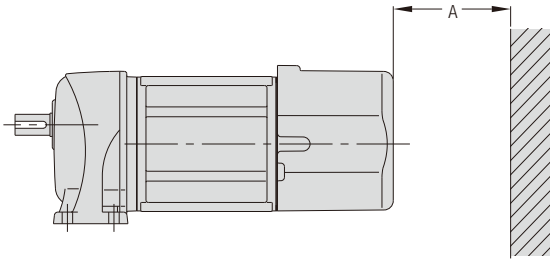

Type	3-Phase			
	0.1 kW	0.2 kW	0.4 kW	0.75 kW
All Models	44	85	96	117

Rectifier and Surge Suppressor of Gearmotors with Brake

The rectifier included with the product is required to operate the brake of a gearmotor with a brake. For rectifier types and supporting voltages, refer to the information shown below.
Since the braking delay time is different among connection methods, select the most appropriate connection method from among those on page 549 for the application.
The rectifier contains a surge suppressor, however, if you still experience issues with electrical noises, please add another surge suppressor or a noise filter.

Series	Number of Phases	Voltage	Rectifier		Surge Suppressor (Option)
			Model	Input voltage range	
MINI	3-Phase	Standard Voltage	A200-D90 (A100-D45)	200 V to 220 VAC (100 V to 110 VAC)	OP-ERZV10D471 (For 200 V Class Brake)
		High Voltage (200 V Class)			
	1-Phase	Standard Voltage			
		High Voltage (200 V Class)			
MID	3-Phase	Standard Voltage	A200-D90-UL	200 V to 230 VAC	OP-ERZV10D471 (For 200 V Class Brake)
		High Voltage (400 V Class)	A400-D180	380 V to 480 VAC	OP-ERZV10D911 (For 400 V Class Brake)
	1-Phase	Standard Voltage	A100-D90-UL	100 V to 120 VAC	OP-ERZV10D471 (For 100 or 200 V Class Brake)
		High Voltage (200 V Class)	A200-D90-UL	200 V to 230 VAC	
	3-Phase Clutch/Brake	Standard Voltage	A200-D90 (A100-D45)	200 V to 220 VAC (100 V to 110 VAC)	OP-ERZV10D471 (For 200 V Class Brake)

■ Rectifier

● A200-D90 (A100-D45)

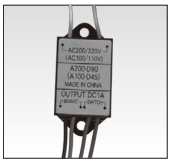

Approx. Weight 40 g

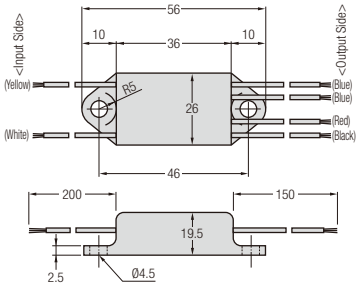

● A200-D90-UL

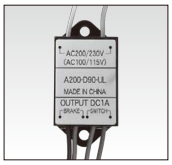

Approx. Weight 40 g

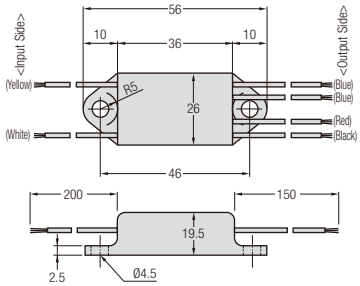

● A100-D90-UL

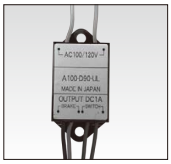

Approx. Weight 40 g

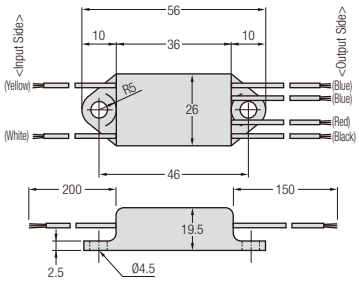

● A400-D180

Approx. Weight 40 g

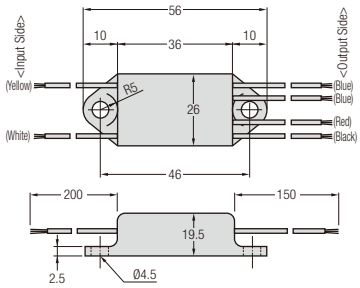

■ Surge Suppressor

● OP-ERZV10D471

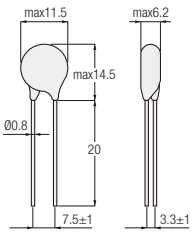

● OP-ERZV10D911

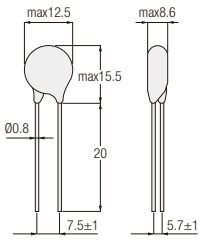

Use a surge suppressor for the contact of a brake DC switching connection to extinguish sparks.

Manual Brake Release Lever (optional)

You can install a manual brake release lever if you desire.
The terminal box and the manual release lever remain in the same positional relationship.
* Water-resistant models (IP65) cannot be equipped with a manual brake release device.

G3, GA and H2 Types

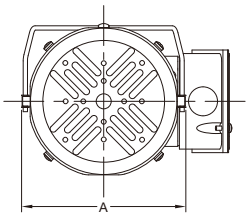

F, FA and F3 Types

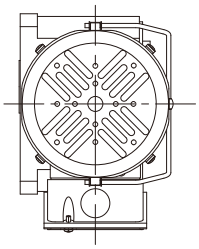

* The diagram above is a representative diagram. The F3 Type is designed for flange mounting on both sides, and the shape of the gearhead is different.

● During operation

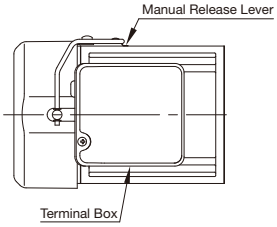

● When releasing the brake

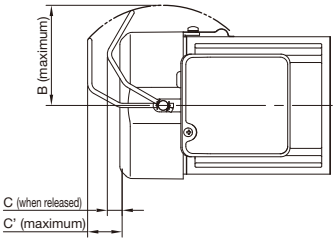

Note 1: Rotate the manual release lever attached to the lever clasp on the top of the fan cover to the rear of the motor by about 60 ° degrees to release the brake.
Note 2: Do not release the brake by 90 ° degrees or more.

Dimensions by Motor Power Common to G3, GA, H2, F, FA, and F3 Types

Motor Power	0.1 kW	0.2 kW	0.4 kW	0.75 kW	1.5 kW	2.2 kW
A	143	143	153	175	199	213
B	86.5	86.5	93	103.5	117	125
C (when released)	16	5.5	10.5	10.5	0	4.5
C' (maximum)	34.5	24	30	38.9	31	42

Note 1: The manual release lever and the terminal box remain in the same positional relationship. Thus, when the position of the terminal box is changed, the position of the manual release lever will also change. Refer to the schematic diagram below.
Note 2: For changes of the position of the manual release lever, refer to the table below.
Note 3: Dimension A is the outermost diameter of the retaining ring.
Note 4: GA and FA types are available only in three-phase 0.4 kW to 2.2 kW.

■ Positional Change of the Terminal Box and the Manual Release Lever

Refer to the schematic diagram below for the positional relationship with the manual release lever when the position of the terminal box is changed.
In this case, the option code that indicates the position of the manual release lever will be displayed on the nameplate.

G3 Type, GA Type, H2 Type	
3-Phase 0.1 kW to 0.2 kW	3-Phase 0.4 kW to 2.2 kW
Standard	Standard
T (Upper) Manual (Left)	T (Upper) Manual (Left)
TZR9	TZR9
T (Left) Manual (Lower-right)	T (Left) Manual (Lower)
T9R4	T9R6(Note 3)
T (Lower) Manual (Upper-right)	T (Lower) Manual (Right)
T6R1	T6R3

F Type, FA Type, F3 Type	
3-Phase 0.1 kW to 0.2 kW	3-Phase 0.4 kW to 2.2 kW
Standard	Standard
T (Right) Manual (Upper)	T (Right) Manual (Upper)
T3RZ	T3RZ
T (Upper) Manual (Lower-left)	T (Upper) Manual (Left)
TZR7	TZR9
T (Left) Manual (Lower-right)	T (Left) Manual (Lower)
T9R4	T9R6

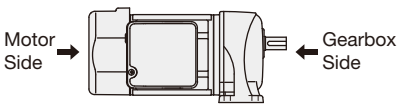

Note 1: All diagrams are viewed from the motor side of the gearmotor.
The bold line ▬ indicates the attachment position of the nameplate. Please note that depending on the mounting position/orientation, the nameplate may be difficult to see.
Note 2: If the attachment position is inconvenient, it can be changed in advance upon request. For more details, please contact your nearest Sales Office or the CS Center.
Note 3: The position of the terminal box of some models cannot be changed because the manual release lever protrudes from the mounting surface.
For applicable types, refer to page 586.
Note 4: GA and FA types are available only in three-phase 0.4 kW to 2.2 kW.

Combination of Gearmotors and Inverter/VFD

MINI Series

1. Usable Frequency Range
   In general, please use the motor within the range of 5 Hz to 120 Hz.
   (1) Precautions for high-speed operation over 60 Hz
   When the motor runs at frequencies over 60 Hz, vibration and noise levels will increase.
   The circumferential velocity also increases, which may result in shorter service life of the oil seal.
   (2) Precautions for low-speed operation
   During low-speed operation the cooling effect of the motor decreases. Please note that it may cause an unusual temperature rise. (Please keep the motor surface temperature below 90 °C.)
2. Torque Characteristics of the motor (Operating Limit)
   The torque characteristics of the motor greatly vary depending on the type of the inverter used with the motor, as well as the control method with said inverter.
3. Brakemotor
   When wiring the brake, please bypass the inverter (supply the power from the primary side of the inverter).
   The rectifier may be damaged.
   Otherwise the brake may malfunction due to voltage fluctuation.
   Please refer to the wiring diagram shown below.

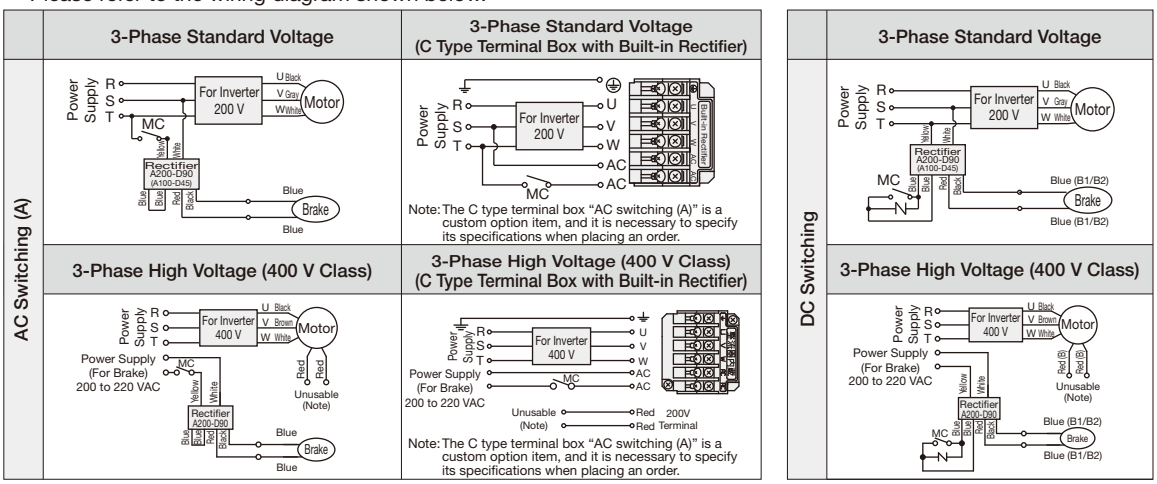

MC: Magnetic Contactor -N-: Surge Suppressor (optional)

Note 1: For Three-phase High Voltage (400 V Class) and special voltages exceeding 220 V, there are two 200 V terminals (red lead wires) extending out from the motor as brake power supply, however, these 200 V terminals cannot be used when using the motor with an inverter.
Note 2: Prepare a 200 V power supply separately for the input lead wire (white and yellow/AC terminal) of the rectifier.
For safety, be sure to insulate the 200 V terminals (red lead wires).
Note 3: For a DC switching connection, connect a surge suppressor (optional) between the contacts. For surge suppressors (optional), refer to page 589.
Note 4: Use switches of 110 VDC with a contact point rating of DC13 to block the inductive load of the DC coil when using DC switching connection. For more details, please contact your nearest Sales Office or the CS Center.
* Contact rating class DC13 is a specification applicable to coil loads and a type defined in JIS C 8201-5-1 (Low-voltage switchgear and control gear).
Note 5: The rectifier contains a diode and will become unusable if it is shorted due to, for example, improper wiring.

4. Motor Protection
   Due to their small rated current, depending on the inverter used, a MINI series gearmotor may not be fully protected with the internal thermal setting alone. In such a case, please set up an additional external safeguard function on the outside of the motor.
5. When driving a 400 V class motor with an inverter
   A surge voltage may occur between the terminals of the motor and deteriorate the insulation of the motor.
   In general, there are two methods to suppress surge voltages: via suppressing the rise of the voltage (output reactor) and suppressing the crest value (output filter).
   (1) Output reactor
   If the wiring length is relatively short, surge voltages can be reduced by installing an AC reactor on the output side of the inverter and suppressing the rise of the voltage. However, if the wiring length is long, suppressing the crest value of the surge voltage may become difficult.
   (2) Output filter
   Suppress the crest value of the terminal voltage of the motor by installing a filter on the output side of the inverter.

Please note that the explanation above is general information. We recommend that you consult with the inverter manufacturer for more information.

MID Series (3-Phase)

1. Usable Frequency Range
   In general, please use the motor within the range of 5 Hz to 120 Hz.
   Please use the gearmotors with a clutch/brake within the range of 5 Hz to 60 Hz.
   (1) Precautions for high-speed operation over 60 Hz
   When the motor runs at frequencies over 60 Hz, vibration and noise levels will increase. The circumferential velocity also increases, which may result in shorter service life of the oil seal.
   (2) Precautions for low-speed operation
   Please note that during low-speed operation, the cooling effect of the motor decreases and an unusual temperature rise may consequently occur.
2. Torque Characteristics of the motor (Operating Limit)
   The torque characteristics of the motor greatly vary depending on the type of the inverter used with the motor, as well as the control method with said inverter.
3. Gearmotors with a brake
   When wiring the brake, bypass the inverter. (The power will be supplied from the primary side of the inverter.)
   Otherwise the brake may malfunction due to voltage fluctuation. Refer to the wiring example shown below.

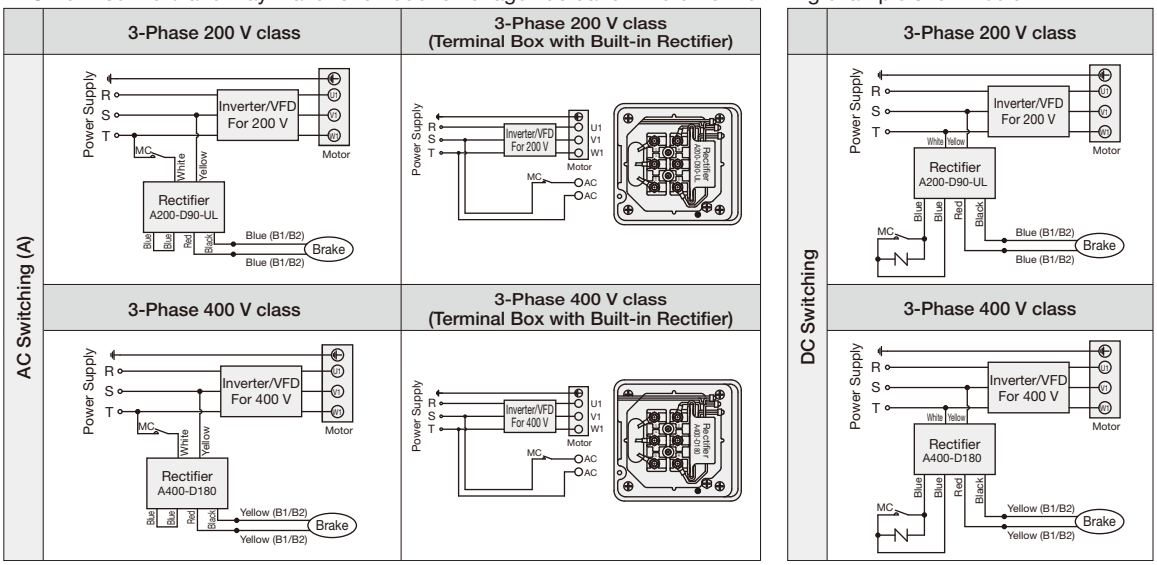

MC: Magnetic Contactor -N-: Surge Suppressor (optional)

Note 1: The B1 and B2 terminals or the AC terminal are provided in the terminal box.
Note 2: For a DC switching connection, connect a surge suppressor (optional) between the contacts. For surge suppressors (optional), refer to page 589.
Note 3: Use switches of 110 VDC <220 VDC> with a contact point rating of DC13 to block the inductive load of the DC coil when using DC switching connection.
Please contact us for more details.
* Contact rating class DC13 is a specification applicable to coil loads and a type defined in JIS C 8201-5-1 (Low-voltage switchgear and control gear).
* The items in < > are for motors with a 400 V class brake (brake lead wires: yellow).

4. When running a 400 V class motor with an inverter
   A surge voltage may occur between the terminals of the motor and deteriorate the insulation of the motor.
   In general, there are two methods to suppress surge voltages: via suppressing the rise of the voltage (output reactor) and suppressing the crest value (output filter).
   (1) Output reactor
   If the wiring length is relatively short, surge voltages can be reduced by installing an AC reactor on the output side of the inverter and suppressing the rise of the voltage.
   However, if the wiring length is long, suppressing the crest value of the surge voltage may become difficult.
   (2) Output filter
   Suppress the crest value of the terminal voltage of the motor by installing a filter on the output side of the inverter.

Please note that the explanation above is general information. We recommend that you consult with the inverter manufacturer for more information.

Global Standards Conformance

We offer gearmotors that suit global directives, standards, and systems.

■ Gearmotors safety standards

Country Name	U.S.A.					Canada					Europe (EU)				China			
Standard	UL					CSA					EN				GB			
Series	MINI		MID			MINI		MID			MINI		MID		MINI		MID	
Number of Phases	1-Phase	3-Phase	1-Phase (Capacitor Run)	1-Phase (Capacitor Start)	3-Phase	1-Phase	3-Phase	1-Phase (Capacitor Run)	1-Phase (Capacitor Start)	3-Phase	1-Phase	3-Phase	1-Phase	3-Phase	1-Phase	3-Phase	1-Phase	3-Phase
Standard No.	UL1004-1 UL1004-3	UL1004-1	-		UL1004-1	C22.2 No. 100 C22.2 No. 77	C22.2 No. 100	-		C22.2 No. 100	EN60034-1	EN60034-1	-	EN60034-1 EN60034-5	GB/T12350-2022		-	GB/T12350-2022
UL File No.	XEWR2. E141674	PRGY2. E172621	-		PRGY2. E172621	XEWR8. E141674	PRGY8. E172621	-		PRGY8. E172621	-				-			

● UL Standards

UL is the abbreviation of “Underwriters Laboratories Inc.,” which is a private testing organization established in 1894 by the Association of American Fire Insurance with the aim of protecting human lives and assets from fires, disasters, and other accidents. This organization performs testing and certification of all kinds of products, parts, and materials. The UL Standards are safety standards which is permitted by most of the states of the United States.

● CSA Standards

In Canada, the use of the CSA Standards is stipulated by law.
UL is authorized as a certification organization for the CSA Standards, and when products are certified to be compliant with relevant CSA Standards, UL will permit the display of the “cUL” mark on them.
Only products displaying the “cUL” mark will be permitted to be used in Canada.

● EU Directives/EN Standards

All machines exported to Europe are required to display “CE marking”.
In order to display “CE marking,” products are obligated to conform to EU Directives.
In principle, conformity to EN Standards is a prerequisite for certifying conformity to EU Directives
Our CE Markings are self declaring compliance with EU Directives.

● GB Standards (CCC mark)

After China joined the WTO (World Trade Organization), the China Compulsory Certification started operating in August 2003. The CCC unified all of the certification systems for products distributed in the country and obligates all items distributed on the Chinese market to bear the CCC mark.
Our induction motor with a power of 0.75 kW or less are subject to the CCC.
When exporting target gearmotors in the form of single units to China, the gearmotors themselves must be CCC-certified Product.
However, if the gearmotors are contained as part of devices and the complete devices can obtain CCC, the gearmotors are not always required to be CCC-certified.

■ Efficiency regulation compliance of low-voltage 3-phase induction motors

Country Name		U.S.A.	Canada	Europe (EU)		China		South Korea
Law		EISA	EEAct	COMMISSION REGULATION (EU) 2019/1781		High efficiency standard values and high efficiency grades of motors		Energy consumption efficiency Grade display system
Standard		NEMA MG1-12-12	CSA C390	IEC60034-1:2017		GB18613-2020		KS C 4202
Our Product Range	Power Range	0.75 kW/1 HP to 2.2 kW/3 HP	0.75 kW/1 HP to 2.2 kW/3 HP	0.2 kW to 0.4 kW	0.75 kW to 2.2 kW	0.2 kW to 0.4 kW (Note 1)	0.75 kW to 2.2 kW	0.75 kW to 2.2 kW
	Number of Motor Poles	4	4	4	4	4	4	4
	Efficiency Class	IE3	IE3	IE2	IE3	GB3 Class	GB3 Class	IE3

• Our product range describes the ranges covering each gearmotor efficiency regulation.
• The product range described above are subject to change without prior notice in response to changes to standards etc.
Note 1: The China GB3 class for 0.2 kW to 0.4 kW is available as an option.

Overseas Supply Voltage

MINI Series

■ Gearmotors/Gearmotors with Brake

● UL

Number of Phases	Motor Power	Voltage (V)/Frequency (Hz)
3-Phase	15 W to 90 W	200 V/50 Hz, 200 V/60 Hz, 220 V/60 Hz **208 V/60 Hz, 230 V/60 Hz** 380 V/50 Hz, 400 V/50 Hz, 400 V/60 Hz 440 V/60 Hz **460 V/60 Hz** **480 V/60 Hz**(*)
1-Phase	15 W to 90 W	100 V/50 Hz, 100 V/60 Hz **115 V/60 Hz** **120 V/60 Hz** 200 V/50 Hz, 200 V/60 Hz **220 V/60 Hz** **230 V/60 Hz**

Note 1: The voltages marked with (*) are not available for some models with motor powers of 15 W and 25 W. Please contact us for more details.
Note 2: With regard to the voltages and frequencies in bold letters, an "X" will be added to the end of the product name
Note 3: For voltages not listed above, please contact your nearest Sales Office or the CS Center.

● CE

Number of Phases	Motor Power	Voltage (V)/Frequency (Hz)
3-Phase	15 W to 90 W	200 V/50 Hz, 200 V/60 Hz, 220 V/60 Hz **220 V/50 Hz** **230 V/50 Hz** 380 V/50 Hz, 400 V/50 Hz, 400 V/60 Hz 440 V/60 Hz **415 V/50 Hz**(*) **420 V/50 Hz**(*) **440 V/50 Hz**(*)
1-Phase	15 W to 90 W	100 V/50 Hz, 100 V/60 Hz 200 V/50 Hz, 200 V/60 Hz **220 V/50 Hz** **230 V/50 Hz**

Note 1: The voltages marked with (*) are not available for some models with motor powers of 15 W and 25 W. Please contact us for more details.
Note 2: With regard to the voltages and frequencies in bold letters, an "X" will be added to the end of the product name
Note 3: For voltages not listed above, please contact your nearest Sales Office or the CS Center.

● CCC

Number of Phases	Motor Power	Voltage (V)/Frequency (Hz)
3-Phase	15 W to 90 W	200 V/50 Hz, 200 V/60 Hz, 220 V/60 Hz **220 V/50 Hz, 230 V/50 Hz** 380 V/50 Hz, 400 V/50 Hz, 400 V/60 Hz 440 V/60 Hz
1-Phase	15 W to 90 W	100 V/50 Hz, 100 V/60 Hz 200 V/50 Hz, 200 V/60 Hz **220 V/50 Hz, 230 V/50 Hz**

Note 1: With regard to the voltages and frequencies in bold letters, an "X" will be added to the end of the product name
Note 2: For voltages not listed above, please contact your nearest Sales Office or the CS Center.
Note 3: The standard power supplies in China are 220 V/50 Hz or 380 V/50 Hz in general.

■ IP65 Gearmotors/IP65 Gearmotors with Brake

● UL

Number of Phases	Motor Power	Voltage (V)/Frequency (Hz)
3-Phase	15 W to 90 W	200 V/50 Hz, 200 V/60 Hz, 220 V/60 Hz **208 V/60 Hz, 230 V/60 Hz**
1-Phase	15 W to 60 W	100 V/50 Hz, 100 V/60 Hz **115 V/60 Hz** **200 V/50 Hz, 200 V/60 Hz** **220 V/60 Hz** **230 V/60 Hz**

Note 1: With regard to the voltages and frequencies in bold letters, an "X" will be added to the end of the product name
Note 2: For voltages not listed above, please contact your nearest Sales Office or the CS Center.

● CE

Number of Phases	Motor Power	Voltage (V)/Frequency (Hz)
3-Phase	15 W to 90 W	200 V/50 Hz, 200 V/60 Hz, 220 V/60 Hz **220 V/50 Hz** **230 V/50 Hz** (Note 3)
1-Phase	15 W to 60 W	100 V/50 Hz, 100 V/60 Hz **200 V/50 Hz, 200 V/60 Hz** **220 V/50 Hz** **230 V/50 Hz** (Note 3)

Note 1: With regard to the voltages and frequencies in bold letters, an "X" will be added to the end of the product name
Note 2: For voltages not listed above, please contact your nearest Sales Office or the CS Center.
Note 3: Depending on the motor power, some models may not be available

MID Series

Voltage and Certification Code	Description	Voltage/Frequency	Compatible Standard
NN	Standard Voltage (Same as Japanese Domestic Type)	200 V/50 Hz, 200 V/60 Hz, 220 V/60 Hz	UL/CE/CCC
WN	High Voltage (400 V Class) (Same as Japanese Domestic Type)	380 V/50 Hz, 400 V/50 Hz, 400 V/60 Hz, 440 V/60 Hz	UL/CE/CCC
KN	Special voltage (dual voltage) for South Korea/Taiwan	220 V/60 Hz, 380 V/60 Hz	UL/CE/CCC
CN	Special voltage (dual voltage) for China	220 V/50 Hz, 230 V/50 Hz, 380 V/50 Hz	UL/CE/CCC
DN	Special voltage (dual voltage) for China/South Korea/Taiwan	220 V/50 Hz, 220 V/60 Hz, 380 V/50 Hz, 380 V/60 Hz	UL/CE/CCC
EN	Special voltage for Europe/North America	415 V/50 Hz, 440 V/50 Hz, 480 V/60 Hz	UL/cUL/CE/CCC
UN	Special voltage (dual voltage) for North America/Europe	230 V/60 Hz, 460 V/60 Hz, 400 V/50 Hz	UL/cUL/CE/CCC
AN	Special voltage (dual voltage) for North America/Europe	208 V/60 Hz, 230 V/60 Hz, 460 V/60 Hz, 400 V/50 Hz	UL/cUL/CE/CCC
MA	Special voltage for Canada	575 V/60 Hz	UL/cUL

Global Standards Conformance

Global Standards of Each Country

1. U.S.A.

● Safety Certification

<Applicable Standard and UL File>

○: Available ×: Not available -: No lineup

Number of Phases	Applicable Standard	Acquired UL File	Our Corresponding Power	Power Supply/Certification Model								
				NN	WN	KN	CN	DN	EN	UN	AN	MA
3-Phase	UL1004-1 (Standard for Rotating Electrical Machines – General Requirements)	PRGY2. E172621	0.1 kW to 0.4 kW	○	○	○	○	○	○	-	○	○
			0.75 kW	○	○	○	○	○	○	○	-	○
			1.5 kW	○	○	○	○	-	○	○	-	○
			2.2 kW	○	○	○	○	-	○	○	-	○

● High Efficiency Regulation

○: Available ×: Not available -: No lineup

Number of Phases	Applicable Standard	Acquired UL File	Our Corresponding Power	Power Supply/Certification Model								
				NN	WN	KN	CN	DN	EN	UN	AN	MA
3-Phase	NEMA MG1-12-12	ZWKG. E172621	0.75 kW	○	○	○	○	○	○	○	-	○
			1.5 kW	○	○	○	○	-	○	○	-	○
			2.2 kW	○	○	○	○	-	○	○	-	○

2. Canada

● Safety Certification

<Applicable Standard and UL File>

○: Available ×: Not available -: No lineup

Number of Phases	Applicable Standard	Acquired UL File	Our Corresponding Power	Power Supply/Certification Model								
				NN	WN	KN	CN	DN	EN	UN	AN	MA
3-Phase	C22.2 No.100 (Motors and Gearmotors)	PRGY8. E172621	0.1 kW to 0.4 kW	○	○	○	○	○	○	-	○	○
			0.75 kW	×	×	×	×	×	○	○	-	○
			1.5 kW	×	×	×	×	-	○	○	-	○
			2.2 kW	×	×	×	×	-	○	○	-	○

● High Efficiency Regulation

○: Available ×: Not available -: No lineup

Number of Phases	Applicable Standard	Acquired UL File	Our Corresponding Power	Power Supply/Certification Model								
				NN	WN	KN	CN	DN	EN	UN	AN	MA
3-Phase	CSA C390	ZYKH. E172621	0.75 kW	×	×	×	×	×	○	○	-	○
			1.5 kW	×	×	×	×	-	○	○	-	○
			2.2 kW	×	×	×	×	-	○	○	-	○

3. Europe

● Safety Certification

○: Available ×: Not available -: No lineup

Number of Phases	EU Directive	Applicable Standard	Our Corresponding Power	Power Supply/Certification Model								
				NN	WN	KN	CN	DN	EN	UN	AN	MA
3-Phase	Low Voltage Directive 2014/35/EU Low Voltage Command	EN60034-1: Rotating electrical machines - Part 1 - Ratings and characteristics EN60034-5: Rotating electrical machines - Part 5 - Classification of degrees of protection provided by the integral design of rotating electrical machines (IP code)	0.1 kW to 0.4 kW	○	○	○	○	○	○	-	○	×
			0.75 kW	○	○	○	○	○	○	○	-	×
			1.5 kW	○	○	○	○	-	○	○	-	×
			2.2 kW	○	○	○	○	-	○	○	-	×

● High Efficiency Regulation

○: Available ×: Not available -: No lineup

Number of Phases	Applicable Standard	Our Corresponding Power	Power Supply/Certification Model								
			NN	WN	KN	CN	DN	EN	UN	AN	MA
3-Phase	COMMISSION REGULATION (EU) 2019/1781	0.2 kW to 0.4 kW	○	○	○	○	○	○	-	○	×
		0.75 kW	○	○	○	○	○	○	○	-	×
		1.5 kW	○	○	○	○	-	○	○	-	×
		2.2 kW	○	○	○	○	-	○	○	-	×

4. China

● Safety Certification

○: Available ×: Not available -: No lineup

Number of Phases	Applicable Standard	Our Corresponding Power	Power Supply/Certification Model								
			NN	WN	KN	CN	DN	EN	UN	AN	MA
3-Phase	GB/T12350-2022 Small power motor safety requirements	0.1 kW to 0.4 kW	○	○	○	○	○	○	-	○	×
		0.75 kW	○	○	○	○	○	○	○	-	×

● High Efficiency Regulation

○: Available ×: Not available -: No lineup

Number of Phases	Applicable Standard	Our Corresponding Power	Power Supply/Certification Model								
			NN	WN	KN	CN	DN	EN	UN	AN	MA
3-Phase	GB18613-2020 Minimum allowable values of energy efficiency and values of efficiency grades for motors	0.2 kW to 0.4 kW	○(*)	×	×	×	○(*)	×	-	×	×
		0.75 kW	○	○	○	○	○	○	○	-	×
		1.5 kW	○	○	○	○	-	○	○	-	×
		2.2 kW	○	○	○	○	-	○	○	-	×

"*" is available on special order.

5. South Korea

● High Efficiency Regulation

○: Available ×: Not available -: No lineup

Number of Phases	Applicable Standard	Our Corresponding Power	Power Supply/Certification Model								
			NN	WN	KN	CN	DN	EN	UN	AN	MA
3-Phase	KS C 4202	0.75 kW	○	○	○	×	○	×	×	-	×
		1.5 kW	○	○	○	×	-	×	×	-	×
		2.2 kW	○	○	○	×	-	×	×	-	×

Global Standard Gearmotors Model and Type Code

MINI Series

MINI Series global standard gearmotors (15 W to 90 W) are classified with codes as shown below. Place orders or make inquiries with these codes. Please note that the specifications of these gearmotors are different from domestic specifications.

Mounting Type	Frame Size	Shaft Arrangement	Reduction Ratio		Standards	Number of Phases	Motor Type Ⓐ	Motor Type Ⓑ	Power	Voltage Frequency	Terminal Box	Option	Option Code
GL	12	N	015	-	U	T	M	L	15	N	C		
HL	40	L	12X	-	Y	S	B	Y	90	W	C	X	HZ
F2S	15	N	120	-	Y	T	WB	R	40	N	N		
F2F	18	T	240	-	C	S	M	R	60	W	T		
①	②	③	④		⑤	⑥	⑦	⑧	⑨	⑩	⑪	⑫	⑬

①Mounting Type	GL	: G Type (Parallel Shaft), Foot Mount Type
	GF	: G Type (Parallel Shaft), Flange Mount Type
	GK	: G Type (Parallel Shaft), Small Flange Mount Type
	HL	: H Type (Right Angle Shaft), Foot Mount Type
	HF	: H Type (Right Angle Shaft), Flange Mount Type (Frame Size Up to 22)
	F2S	: F2 Type (Concentric Right Angle Hollow Bore)
	F2F	: F2 Type (Concentric Right Angle Shaft)
②Frame Size and Output Shaft Diameter	Output Shaft Diameter (internal diameter for right angle hollow bore types, and outer diameter for other types)	
③Shaft Arrangement Only HL, HF, and F2F For models other than those mentioned above, "N" will be indicated. (The F2F is not provided with an R shaft.)	L: Viewing from the input shaft, output shaft would be on the left side	R: Viewing from the input shaft, output shaft would be on the right side T: Viewing from the input shaft, the output shaft would be on the both sides
④Reduction Ratio (All reduction ratios are indicated with three digits.)	005: 1/5 to 18X: 1/1800 (10 → 010, 1200 → 12X)	
⑤Standard	U	: UL Standard Product (UL, cUL)
	Y	: Product with CE Marking
	C	: CCC-certified Product
⑥Number of Phases	T	: 3-Phase
	S	: 1-Phase
⑦Motor Type Ⓐ (Note 1)	M	: With Motor
	B	: Brakemotor
	WM	: With IP65 Motor (Note 1)
	WB	: With IP65 Brakemotor (Note 1)
⑧ ⑨Motor Type Ⓑ and Power (Note 2)	L15	: 15 W G-12, G-22, H-15, H-22, F2S-12, F2F-15
	L25	: 25 W G-12, G-22, H-15, H-22, F2S-12, F2F-15
	R25	: 25 W G-15, G-28, H-28
	R40	: 40 W G-15, G-28, G-32, H-18, H-28, H-32, F2S-15, F2F-18
	Y40	: 40 W G-18
	R60	: 60 W G-15, G-28, G-32, H-18, H-28, H-32, F2S-15, F2F-18
	Y60	: 60 W G-18
	R90	: 90 W G-15, G-28, G-32, H-18, H-28, H-32, F2S-15, F2F-18
	Y90	: 90 W G-18, G-40, H-40
⑩Voltage/Frequency	N	: Standard Voltage 3-Phase: 200 V/50 Hz, 200 V/60 Hz, 220 V/60 Hz 1-Phase: 100 V/50 Hz, 100 V/60 Hz
	W	: High Voltage 3-Phase: 380 V/50 Hz, 400 V/50 Hz, 400 V/60 Hz, 440 V/60 Hz 1-Phase: 200 V/50 Hz, 200 V/60 Hz
⑪Terminal Box (Note 3)	UL	C : C Type Terminal Box without Terminal Block, Made of Resin
		A : A Type Terminal Box without Terminal Block, Made of Aluminum
		N : Without Terminal Box (Flying Leads, Water-Resistant Cabtyre Cable)
	CE CCC	T : T Type Terminal Box
		K : K Type Terminal Box
		C : C Type Terminal Box with Built-in Rectifier, Dedicated to Brakemotor
		A : A Type Terminal Box (non-compliant with CCC Standard)
		Z : Z Type Terminal Box (non-compliant with CCC Standard)
		N : Without Terminal Box (Flying Leads, Water-Resistant Cabtyre Cable)
⑫Option	Blank: Standard Specification	
	X	: Special Specification Code
⑬Option Code (Note 4)	Terminal Box/Lead Wire Position Codes Please refer to the list of option codes on page 581 for details.	

Note 1: Water-resistant type CCC-compliant products are not available.
Note 2: Please note that models are classified by type and frame size.
Note 3: Specifications are different among certification standards. Be sure to read pages 594 to 595 and examine the specifications.
Note 4: The option code will not be shown in the product nomenclature on the nameplate. But it will be shown in the Option code row of the nameplate.
Note 5: Some frame sizes are different from domestic standard products. For details, please refer to the standard motor model lineup on pages 604 to 607.
Note 6: Safety certification standard is obtained by the motor unit model.
[Example] GL12N015-UTML15NC → Registered model UTML15NC
Note 7: For conversions from domestic models, please refer to the conversion table on page 599.

MID Series

Gearhead Type					Motor Type							Brake Specifications	Option	
Mounting Type	Frame Size	Shaft Arrangement	Reduction Ratio		Motor Type	Motor Specifications	Power	Number of Phases	Supply Voltage	Standards	Terminal Box	Brake Specifications	Option	Option Code
G3L	18	N	5	-	M	M	02	T	M	A	T	N		
H2F	22	H	25	-	W	M	01	T	W	N	E	V4	X	AA
FF	32	L	80	-	M	M	04	T	C	N	T	B4		
F3S	30	N	7	-	M	R	08	T	A	N	T	B2	X	T9HZ
①	②	③	④		⑤	⑥	⑦	⑧	⑨	⑩	⑪	⑫	⑬	⑭

①Mounting Type	G3L	: G3 Type (Parallel Shaft), Foot Mount Type
	GAL	: GA Type (Parallel Shaft), Foot Mount Type
	G3F	: G3 Type (Parallel Shaft), Flange Mount Type
	G3K	: G3 Type (Parallel Shaft), Small Flange Mount Type
	H2L	: H2 Type (Right Angle Shaft), Foot Mount Type
	H2F	: H2 Type (Right Angle Shaft), Flange Mount Type
	FS	: F Type (Right Angle Hollow Bore) (Frame size 55 is cast iron only)
	FAS	: FA type (hollow bore) (Frame size 55 is only)
	FF	: F Type (Right Angle Shaft)
	F3S	: F3 Type (Concentric Right Angle Hollow Bore)
	F3F	: F3 Type (Concentric Right Angle Shaft)
②Frame Size and Output Shaft Diameter	Solid Shaft: OD Hollow Bore Shaft: ID	

③Shaft Arrangement			Parallel Shaft Right Angle Hollow Bore Concentric Right Angle Hollow Bore	Right Angle Shaft, Right Angle Shaft, Concentric Right Angle Shaft		
	Shaft Arrangement			Viewing from the input shaft, output shaft would be on the left side	Viewing from the input shaft, output shaft would be on the right side	Viewing from the input shaft, the output shaft would be on the both sides
	Material	Carbon Steel	N	L	R	T
		Stainless Steel	S	H	M	B

④Reduction Ratio	5: 1/5 to 15X: 1/1500	
⑤Motor Type	M	: Standard Induction Motor (IP40 or IP44)
	W	: IP65 Induction Motor
⑥Motor Specifications (Note 1)	M	: IE1 Efficiency Ins. F (0.1 kW) IE2 Efficiency Ins. F (0.2 kW to 0.4 kW)
	R	: IE3 Efficiency Ins. F (0.75 kW to 2.2 kW)
⑦Motor Power (Note 2)	01	: 3-Phase 0.1 kW
	02	: 3-Phase 0.2 kW
	04	: 3-Phase 0.4 kW
	08	: 3-Phase 0.75 kW
	15	: 3-Phase 1.5 kW
	22	: 3-Phase 2.2 kW
⑧Number of Phases	T	: 3-Phase
⑨Voltage	N	: 200 V/50 Hz, 200 V/60 Hz, 220 V/60 Hz
	W	: 380 V/50 Hz, 400 V/50 Hz, 400 V/60 Hz, 440 V/60 Hz
	K	: 220 V/60 Hz, 380 V/60 Hz
	C	: 220 V/50 Hz, 230 V/60 Hz, 380 V/50 Hz
	D	: 220 V/50 Hz, 220 V/60 Hz, 380 V/50 Hz, 380 V/60 Hz
	E	: 415 V/50 Hz, 440 V/50 Hz, 480 V/60 Hz
	U	: 230 V/60 Hz, 460 V/60 Hz, 400 V/50 Hz
	A	: 208 V/60 Hz, 230 V/60 Hz, 460 V/60 Hz, 400 V/50 Hz
	M	: 575 V/60 Hz
⑩Standards	N	: CE, UL, CCC
	A	: UL * Supply Voltage: M (575 V/60 Hz) only
⑪Terminal Box	T	: T Type Terminal Box (Steel Plate)
	E	: E Type Terminal Box (Aluminum) (IP65 Induction Motor)
	N	: No Terminal Box (Lead wire type)

⑫Brake Specifications	Corresponding Motor Type (Refer to ⑥.)	Brake Specification
	M : Induction Standard Motor	N : No Brake
		B2 : 200 V Class Brake
		B4 : 400 V Class Brake
		J2 : 200 V Brake Motor with Manual Brake Release Lever (optional)
		J4 : 400 V Brake Motor with Manual Brake Release Lever (optional)
	W : Induction IP65 Motor	N : No Brake
		V2 : IP65 200 V Class Brake
		V4 : IP65 400 V Class Brake

⑬Option	Blank	: Standard Specification
	X	: Special Specification Code
⑭Option Code	Built-in Rectifier Connection Code For details, please refer to the list of option codes on page 561.	
	Terminal Box Position Code For details, please refer to the list of option codes on page 582.	
	Please refer to the option code list on page 1012 for codes used for other special options.	

Note 1: For CCC Standard, 0.2 kW and 0.4 kW are certified under limited duty cycle. Please be cautious upon selecting the product.
Note 2: GA and FA types are available only in 0.4 kW to 2.2 kW.

Details of Global Standard Models

MINI Series

■ Product models compliant with global standards

- Product models compliant with global standards are different from domestic standard specifications. When placing an order for a product, it is required to order under the global standard model. Select a product of domestic specifications of equivalent items (power, reduction ratio, motor type, etc.) from this catalog, and convert the model into the corresponding product model compliant with global standards by referring to the figure shown below.
- Although the dimensions, performance, etc. of a product model compliant with global standards are the same as those of a product of domestic specifications, the frame sizes (output shaft diameters) of some models are changed, and their dimensions are different from those of products of domestic dimensions. Please refer to page 602 for the applicable models.

■ Major precautions about model conversion

- The model is expressed by separating the gearbox unit and the motor unit.
- All reduction ratios are displayed with three digits, unlike the conventional form. [Example] 5 → 005, 1200 → 12X

● **Example of Part Number Conversion**

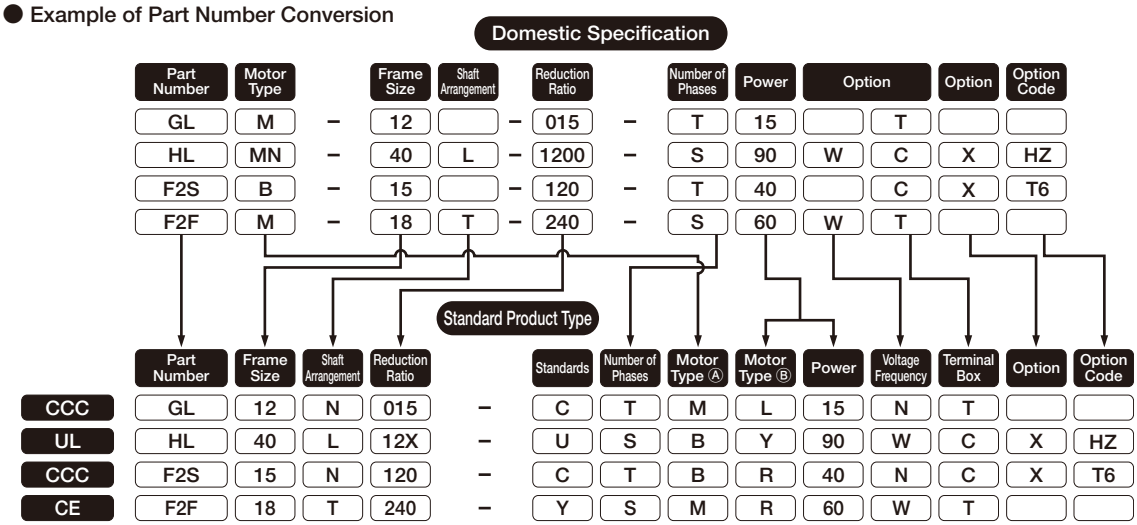

MID Series

■ Models compliant with global standards are classified as shown below by supply voltage.

(Model example)

Gearbox Unit (common to all standards)					Motor Unit (Each standard is classified with a combination of a supply voltage code and a certification code.)							
Mounting Type	Frame Size	Shaft Arrangement	Reduction Ratio		Motor Type	Motor Specifications	Power	Number of Phases	Power Supply Voltage	Standard	Terminal Box	Brake
G3L	22	N	30	–	M	M	04	T	N	N	T	N
									W	N		
									K	N		
									C	N		
									D	N		
									E	N		
									U	N		
									A	N		
									M	A		

■ Details of compliance with standards

Voltage and Certification Code	Description	Voltage/Frequency	Compatible Standard
NN	Standard Voltage (Same as Japanese Domestic Type)	200 V/50 Hz, 200 V/60 Hz, 220 V/60 Hz	UL/CE/CCC
WN	High Voltage (400 V Class) (Same as Japanese Domestic Type)	380 V/50 Hz, 400 V/50 Hz, 400 V/60 Hz, 440 V/60 Hz	UL/CE/CCC
KN	Special voltage (dual voltage) for South Korea/Taiwan	220 V/60 Hz, 380 V/60 Hz	UL/CE/CCC
CN	Special voltage (dual voltage) for China	220 V/50 Hz, 230 V/50 Hz, 380 V/50 Hz	UL/CE/CCC
DN	Special voltage (dual voltage) for China/South Korea/Taiwan	220 V/50 Hz, 220 V/60 Hz, 380 V/50 Hz, 380 V/60 Hz	UL/CE/CCC
EN	Special voltage for Europe/North America	415 V/50 Hz, 440 V/50 Hz, 480 V/60 Hz	UL/cUL/CE/CCC
UN	Special voltage (dual voltage) for North America/Europe	230 V/60 Hz, 460 V/60 Hz, 400 V/50 Hz	UL/cUL/CE/CCC
AN	Special voltage (dual voltage) for North America/Europe	208 V/60 Hz, 230 V/60 Hz, 460 V/60 Hz, 400 V/50 Hz	UL/cUL/CE/CCC
MA	Special voltage for Canada	575 V/60 Hz	UL/cUL

Nameplate

MINI Series

● UL

3-Phase

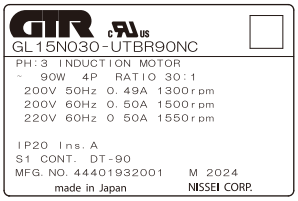

1-Phase

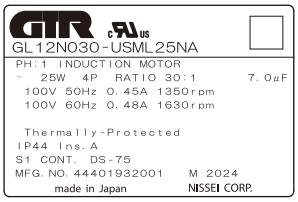

● CE

3-Phase

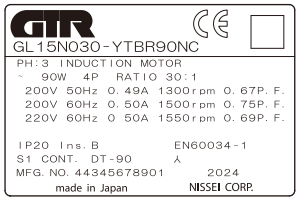

1-Phase

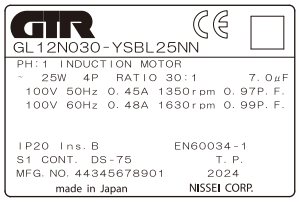

● CCC

3-Phase

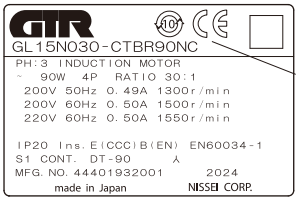

CE Marking will be displayed.
A seal (CCC) will also be displayed besides the nameplate.

1-Phase

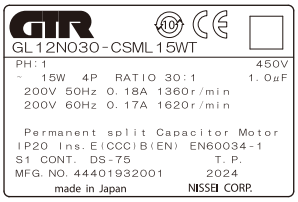

Global Standards Conformance

MID Series

Power	Power Supply/Certification Model								
	NN	WN	KN	CN	DN	AN	UN	EN	MA
0.1 kW	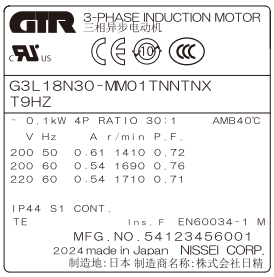								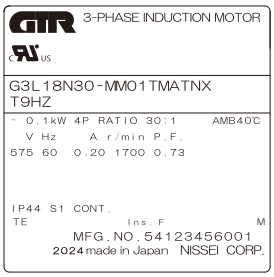
0.2 kW,0.4 kW	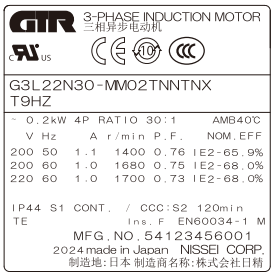								
0.75 kW	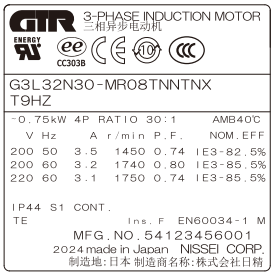								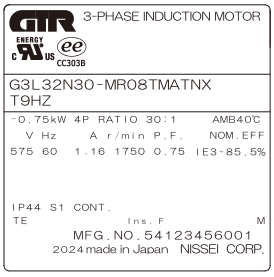
1.5 kW, 2.2 kW	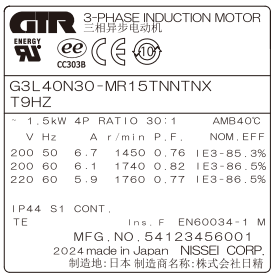								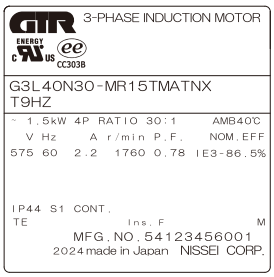

Global Standard Gearmotors Specifications/Terminal Box

MINI Series

■ Specifications of terminal box <UL>

● Indoor specifications

Power	Specifications	Flying Leads	Terminal Box Type	
			C-BOX	A-BOX
15 W to 90 W	No Brake	○	○	○
	Brakemotor	○	○	○

Note 1: The C-Type terminal box is made of resin, and the A-Type terminal box is made of aluminum.Select one or the other if a gearmotor with a terminal box is required.
Note 2: Neither the C Type terminal box nor the A Type terminal box is provided with a terminal block. In the case of a gearmotor with a brake, the brake lead wires are drawn into the terminal box.
Note 3: When the voltage exceeds 220 V, the 200 V terminal (red lead wire) is separately drawn out of the motor.
Note 4: For water-resistant types, a cabtyre cable is used as is the case with gearmotors of domestic specifications.

<C Type Terminal Box (Resin)>

3-Phase and 1-Phase 15 W to 90 W

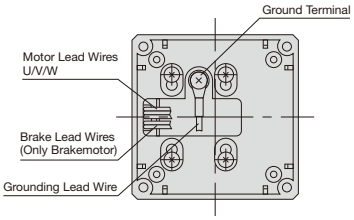

<A Type Terminal Box (Aluminum)>

3-Phase and 1-Phase 15 W to 90 W

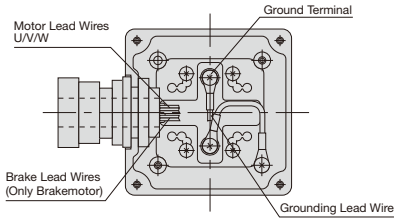

■ Terminal Box Specifications <CE, CCC>

Power	Specifications	Flying Leads	Terminal Box Type				
			T Type	K Type	C Type	A Type	Z Type
15W to 90W	No Brake	○	○	○	×	○	×
	Brakemotor	○	○	○	○	○	○

Note 1: The specifications of both gearmotors with flaying leads and gearmotors with a terminal box are the same as domestic standard specifications. Please refer to page 603 for details.
Note 2: When the voltage exceeds 220 V, the 200 V terminal (red lead wire) is separately drawn out of the motor.
Note 3: For water-resistant types, a cabtyre cable is used as is the case with gearmotors of domestic specifications.
Note 4: Gearmotors with a 400 V class voltage are not available with flying leads. Designate a gearbox with a terminal box.
Note 5: A Type and Z Type terminal boxes are not compliant with the CCC Standard.

■ Please note that products described below will differ in frame size (output shaft diameter and mounting dimensions) from that of the domestic model.

Type	Motor Designation	Reduction Ratio	Domestic Specification Frame Size	Global Standard Product Frame Size
G	T40, T40W, S40, S40W	5, 7.5, 10, 15, 20, 25, 30, 40, 50, 60	12	15
		300, 375, 450	22	28
	T60	5, 7.5, 10, 15, 20, 25, 30	12	15
		300, 375, 450	22	28
	T60W, S60, S60W	300, 375, 450	22	28
H	T40, T40W, S40, S40W	10, 15, 20, 25, 30, 40, 50, 60, 80, 100, 120	15	18
		300, 375, 450	22	28
	T60	10, 15, 20, 25, 30, 40, 50, 60	15	18
		300, 375, 450	22	28
	T60W, S60, S60W	300, 375, 450	22	28
F2S	T40, T40W, S40, S40W	10, 15, 20, 25, 30, 40, 50, 60, 80, 100, 120	12	15
	T60	10, 15, 20, 25, 30, 40, 50, 60	12	15
F2F	T40, T40W, S40, S40W	10, 15, 20, 25, 30, 40, 50, 60, 80, 100, 120	15	18
	T60	10, 15, 20, 25, 30, 40, 50, 60	15	18

Note 1: The frame size represents the internal diameter of the output shaft in the case of the F2S and external diameter of the output shaft for the rest.
Note 2: Please refer to the standard gearmotor model lineup on pages 604 to 607 as well.
If you have any questions, please contact your nearest Sales Office or the CS Center.

■ CE, CCC

● Types and Structures

<T Type Terminal Box>

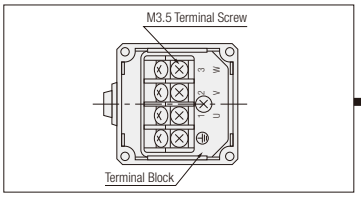

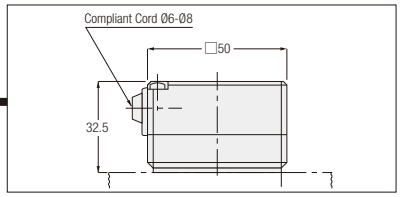

<K Type Terminal Box>

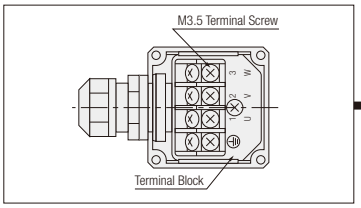

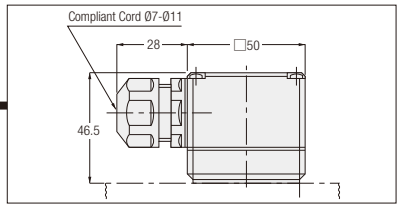

<C Type Terminal Box (with Built-in Rectifier)>

3-Phase

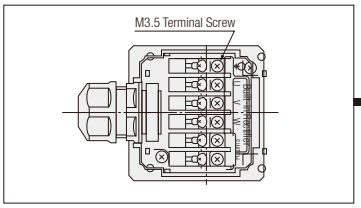

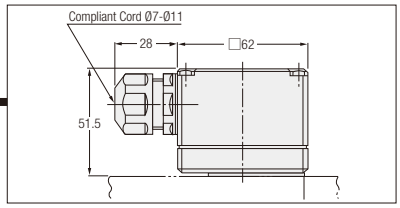

1-Phase

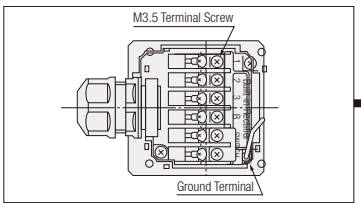

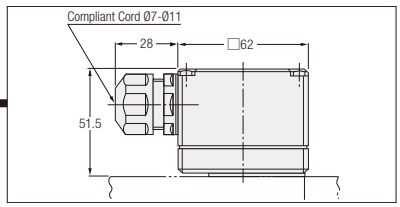

<A Type Terminal Box (Aluminum) Incompliant with CCC Standard>

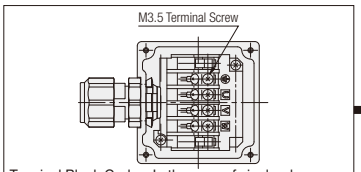

Terminal Block Codes: In the case of single-phase models, U, V, and W will be replaced with 1, 2, and 3.

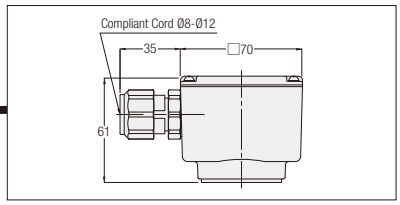

<Z Type Terminal Box (Aluminum) Incompliant with CCC Standard>

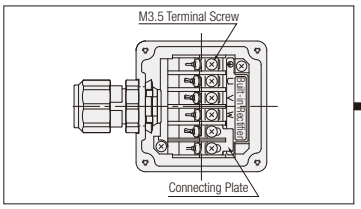

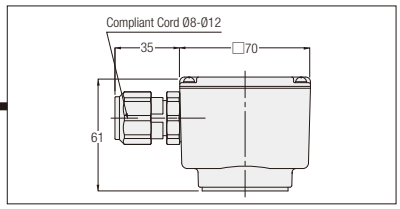

Global Standard Gearmotors Model Lineup

MINI Series <G Type>

Part Number	4 Poles Motor Power	Frame Size	Reduction Ratio
Gearmotors / Gearmotors with Brake	3-Phase 15 W / 1-Phase 15 W	12	1/5, 1/7.5, 1/10, 1/15, 1/20, 1/25, 1/30, 1/40, 1/50, 1/60, 1/80, 1/100, 1/120, 1/160, 1/200, 1/240
		22	1/300, 1/375, 1/450, 1/600, 1/750, 1/900, 1/1200, 1/1500, 1/1800
	3-Phase 25 W / 1-Phase 25 W	12	1/5, 1/7.5, 1/10, 1/15, 1/20, 1/25, 1/30, 1/40, 1/50, 1/60, 1/80, 1/100, 1/120
		15	1/160, 1/200, 1/240
		22	1/300, 1/375, 1/450, 1/600, 1/750, 1/900
		28	1/1200, 1/1500, 1/1800
	3-Phase 40 W / 1-Phase 40 W	15	1/5, 1/7.5, 1/10, 1/15, 1/20, 1/25, 1/30, 1/40, 1/50, 1/60, 1/80, 1/100, 1/120
		18	1/160, 1/200, 1/240
		28	1/300, 1/375, 1/450, 1/600, 1/750, 1/900
		32	1/1200, 1/1500, 1/1800
	3-Phase 60 W / 1-Phase 60 W	15	1/5, 1/7.5, 1/10, 1/15, 1/20, 1/25, 1/30, 1/40, 1/50, 1/60
		18	1/80, 1/100, 1/120, 1/160, 1/200, **1/240**
		28	1/300, 1/375, 1/450, 1/600, 1/750, 1/900
		32	1/1200, 1/1500, 1/1800
	3-Phase 90 W / 1-Phase 90 W	15	1/5, 1/7.5, 1/10, 1/15, 1/20, 1/25, 1/30
		18	1/40, 1/50, 1/60, 1/80, 1/100, 1/120, **1/160**, **1/200**, **1/240**
		28	1/300, 1/375, 1/450
		32	1/600, 1/750, 1/900
		40	1/1200, 1/1500, 1/1800

Note 1: The G Type is available in three types: Foot mount type, Flange mount type, and Small flange mount type with a frame size between 22 and 32.
Note 2: ( ) indicates a limited torque type. Please make sure to check the allowable output shaft torque in the performance table.

Global Standards Conformance

MINI Series <H Type>

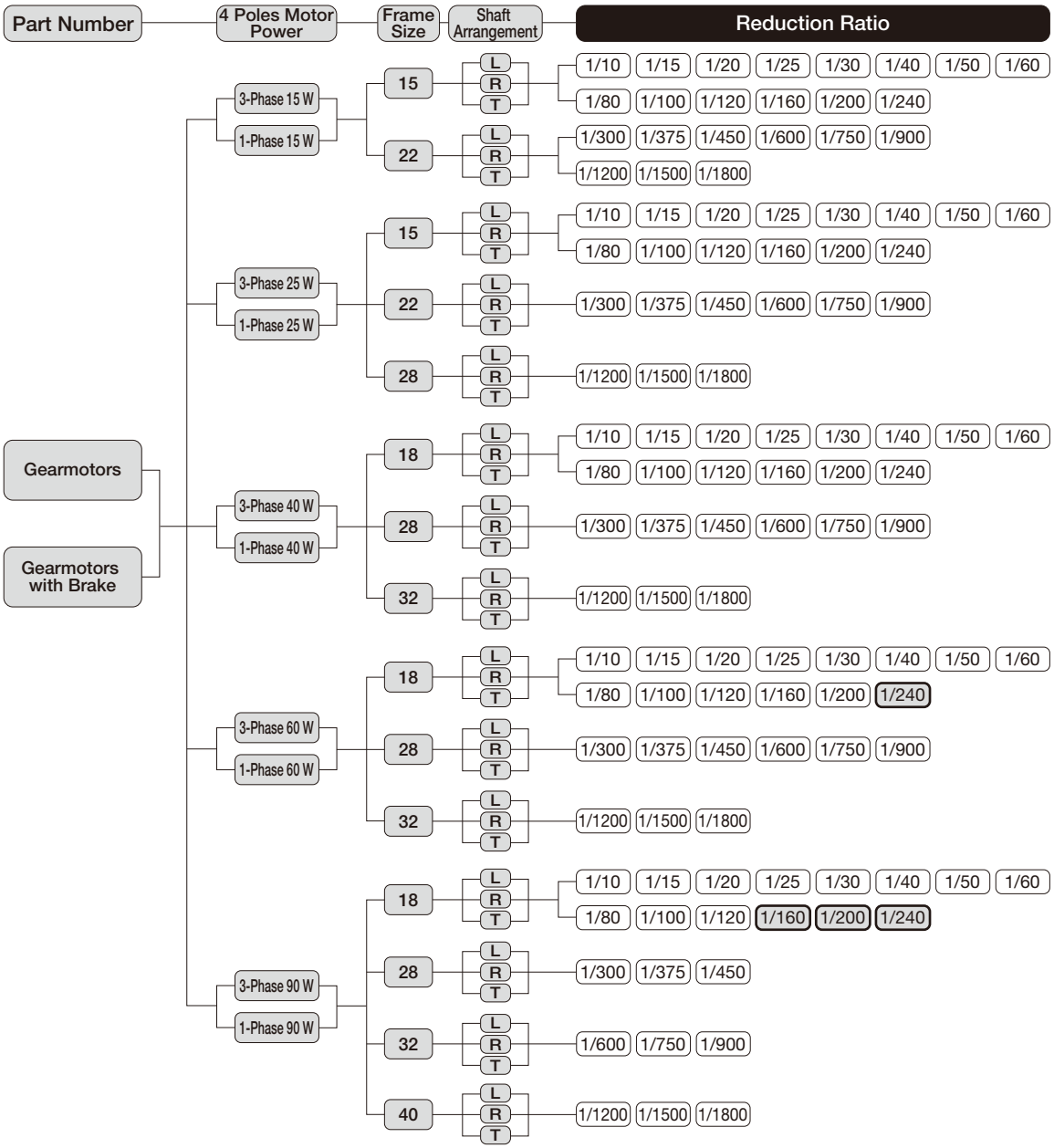

Note 1: The frame sizes of flange mount types are 15, 18, and 22. (Frame sizes 28, 32, and 40 are not available.)
Note 2: ( ) indicates a limited torque type. Please make sure to check the allowable output shaft torque in the performance table.

MINI Series <Concentric Right Angle Hollow Bore/F2S Type>

Part Number	4 Poles Motor Power	Frame Size	Reduction Ratio
Gearmotors / Gearmotors with Brake	3-Phase 15 W / 1-Phase 15 W	12	1/10, 1/15, 1/20, 1/25, 1/30, 1/40, 1/50, 1/60, 1/80, 1/100, 1/120, 1/160, 1/200, 1/240
	3-Phase 25 W / 1-Phase 25 W	12	1/10, 1/15, 1/20, 1/25, 1/30, 1/40, 1/50, 1/60, 1/80, 1/100, 1/120, 1/160, 1/200, 1/240
	3-Phase 40 W / 1-Phase 40 W	15	1/10, 1/15, 1/20, 1/25, 1/30, 1/40, 1/50, 1/60, 1/80, 1/100, 1/120, 1/160, 1/200, 1/240
	3-Phase 60 W / 1-Phase 60 W	15	1/10, 1/15, 1/20, 1/25, 1/30, 1/40, 1/50, 1/60, 1/80, 1/100, 1/120, 1/160, 1/200, **1/240**
	3-Phase 90 W / 1-Phase 90 W	15	1/10, 1/15, 1/20, 1/25, 1/30, 1/40, 1/50, 1/60, 1/80, 1/100, 1/120, **1/160**, **1/200**, **1/240**

Note: ▭ indicates a limited torque type. Please make sure to check the allowable output shaft torque in the performance table.

MINI Series <Concentric Right Angle Shaft/F2F Type>

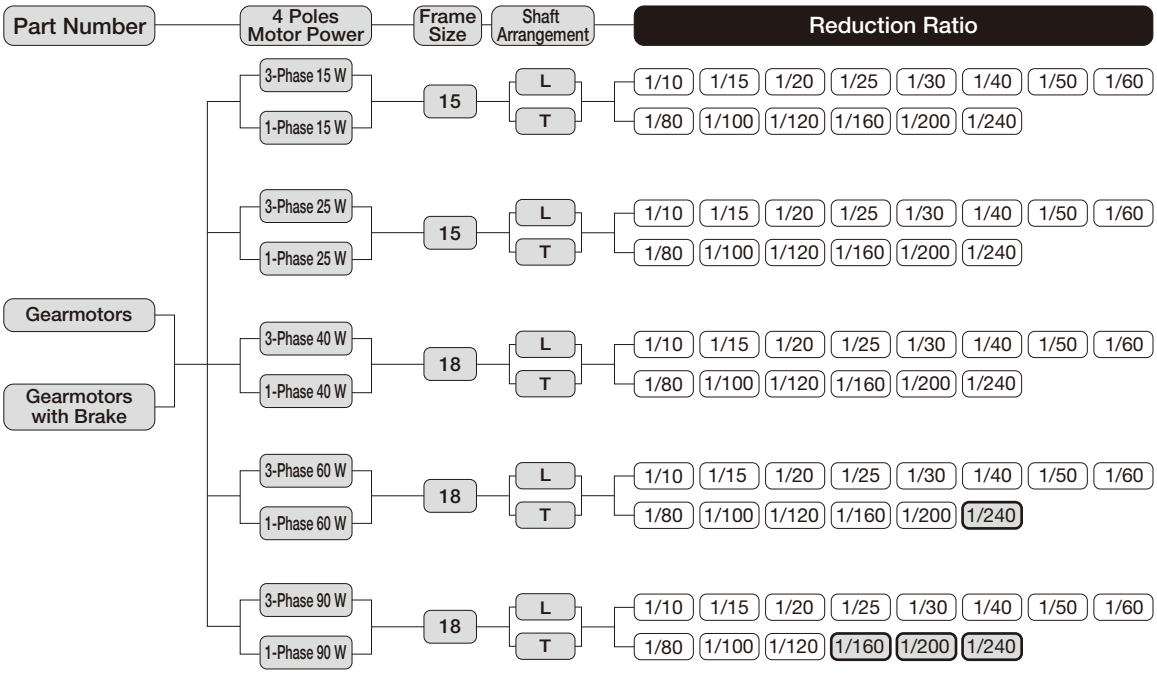

Note: ⬭ indicates a limited torque type. Please make sure to check the allowable output shaft torque in the performance table.

■ F2F (right angle shaft) shaft arrangement

The L shaft of the F2F (concentric right angle shaft) is as shown in [Figure-1]. The F2 type is designed for concentric flange mounting on both sides, and the output shaft can therefore be positioned on the right side as shown in [Figure-2] by rotating the gearmotor to 180 °. In this case, however, the terminal box will be on the lower side. If you wish to set the terminal box in the upper position for the convenience of use, place an order for the terminal box lower side (option code “T6”) for a standard product [Figure-1]. By rotating the gearmotor to 180 ° in this state, the output shaft will be positioned on the right side with the terminal box in the upper position. Please refer to page 581 for positional changes of terminal boxes.

Figure when viewed from the motor side

When the output shaft is an L shaft, it is on the left side when viewed from the motor side with the terminal box in the upper position.

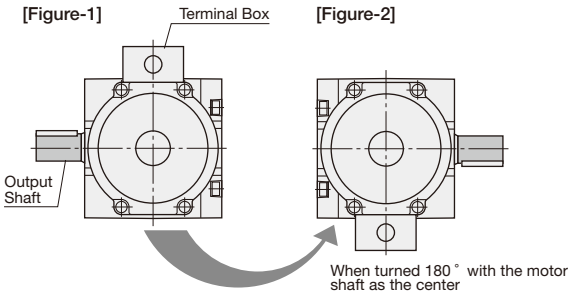

MID Series <G3 Type>

Part Number → 4 Poles Motor Power → Frame Size → Reduction Ratio

- Gearmotors
- Gearmotors with Brake
- Brakemotors with Manual Release
- IP65 Gearmotors
- IP65 Gearmotors with Brake

4 Poles Motor Power	Frame Size	Reduction Ratio
3-Phase 0.1 kW	18	1/5, 1/10, 1/15, 1/20, 1/25, 1/30, 1/40, 1/50
	22	1/60, 1/80, 1/100, 1/120, 1/160, 1/200
	28	1/300, 1/375, 1/450
	32	1/600, 1/750, **1/900**, **1/1200**
3-Phase 0.2 kW	18	1/5, 1/10, 1/15, 1/20, 1/25
	22	1/30, 1/40, 1/50, 1/60, 1/80, **1/100**
	28	1/100, 1/120, 1/160, 1/200
	32	1/300, 1/375, 1/450
	40	1/600, **1/750**, **1/900**, **1/1200**
3-Phase 0.4 kW	22	1/5, 1/10, 1/15, 1/20, 1/25
	28	1/30, 1/40, 1/50, 1/60, 1/80, **1/100**
	32	1/100, 1/120, 1/160, 1/200
	40	1/300, **1/375**, **1/450**
	50	**1/600**, **1/750**, **1/900**, **1/1200**
3-Phase 0.75 kW	28	1/5, 1/10, 1/15, 1/20, 1/25
	32	1/30, 1/40, 1/50, 1/60, 1/80, **1/100**
	40	1/100, 1/120, 1/160, 1/200
	50	1/300, **1/375**, **1/450**
(Note 2) 3-Phase 1.5 kW	32	1/5, 1/10, 1/15, 1/20, 1/25
	40	1/30, 1/40, 1/50, 1/60, 1/80, **1/100**
	50	1/100, 1/120, **1/160**, **1/200**
(Note 2) 3-Phase 2.2 kW	40	1/5, 1/10, 1/15, 1/20, 1/25
	50	1/30, 1/40, 1/50, 1/60, 1/80, **1/100**

Note 1: The G3 Type is available in three types: Foot mount, Flange mount, and Small flange mount.
Please note that small flange mount (G3K) is available only for frame sizes 18 to 32.
Note 2: IP65 gearmotors with a brake are not available for 1.5 kW and 2.2 kW.
Note 3: ▭ indicates a limited torque type. Please make sure to check the allowable output shaft torque in the performance table.

Global Standards Conformance

MID Series <GA Type>

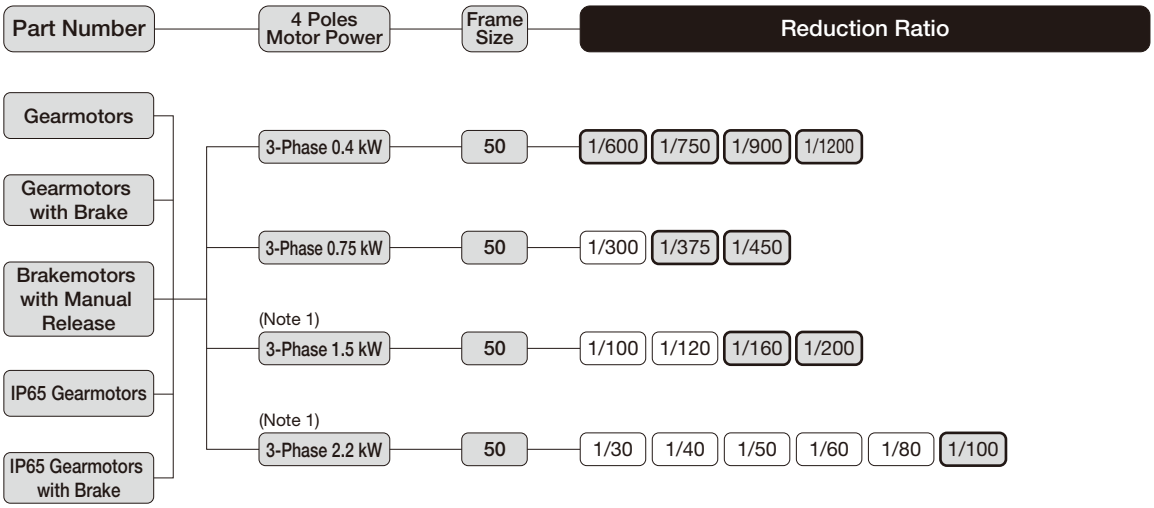

Note 1: IP65 gearmotors with a brake are not available for 1.5 kW and 2.2 kW.
Note 2: ▭ indicates a limited torque type. Please make sure to check the allowable output shaft torque in the performance table.

MID Series <H2 Type>

Part Number	4 Poles Motor Power	Frame Size	Shaft Arrangement	Reduction Ratio
Gearmotors Gearmotors with Brake Brakemotors with Manual Release IP65 Gearmotors IP65 Gearmotors with Brake	3-Phase 0.1 kW	22 (Note 1)	L H R M T B	1/5 1/10 1/15 1/20 1/25 1/30 1/40 1/50 1/60 1/80 1/100 1/120 1/160 1/200 **1/240**
		28	L H R M T B	1/300 1/375 1/450
		32	L H R M T B	1/600 1/750 1/900 **1/1200** **1/1500**
	3-Phase 0.2 kW	22 (Note 1)	L H R M T B	1/5 1/10 1/15 1/20 1/25 1/30 1/40 1/50 1/60
		28	L H R M T B	1/80 1/100 1/120 1/160 1/200 1/240
		32	L H R M T B	1/300 1/375 1/450
		40	L H R M T B	1/600 1/750 **1/900** **1/1200** **1/1500**
	3-Phase 0.4 kW	28	L H R M T B	1/5 1/10 1/15 1/20 1/25 1/30 1/40 1/50 1/60
		32	L H R M T B	1/80 1/100 1/120 1/160 1/200 **1/240**
		40	L H R M T B	1/300 1/375 **1/450**
		50	L H R M T B	1/600 **1/750** **1/900** **1/1200** **1/1500**
	3-Phase 0.75 kW	32	L H R M T B	1/5 1/10 1/15 1/20 1/25 1/30 1/40 1/50 1/60
		40	L H R M T B	1/80 1/100 1/120 1/160 **1/200** **1/240**
		50	L H R M T B	1/300 **1/375** **1/450**
	(Note 2) 3-Phase 1.5 kW	40	L H R M T B	1/5 1/10 1/15 1/20 1/25 1/30 1/40 1/50 1/60
		50	L H R M T B	1/80 1/100 1/120 **1/160** **1/200** **1/240**
	(Note 2) 3-Phase 2.2 kW	50	L H R M T B	1/5 1/10 1/15 1/20 1/25 1/30 1/40 1/50 1/60 1/80 1/100 **1/120**

Note 1: The flange mount type (H2F) is also available for frame size 22 only.
Note 2: IP65 gearmotors with a brake are not available for 1.5 kW and 2.2 kW.
Note 3: Shaft arrangement H, M, and B (stainless steel) are IP65 gearmotors and IP65 gearmotors with a brake.
Note 4: ▭ indicates a limited torque type. Please make sure to check the allowable output shaft torque in the performance table.

Global Standards Conformance

MID Series <Right Angle Hollow Bore/FS Type>

Part Number	4 Poles Motor Power	Frame Size	Reduction Ratio
Gearmotors Gearmotors with Brake Brakemotors with Manual Release IP65 Gearmotors IP65 Gearmotors with Brake	3-Phase 0.1 kW	25	1/10, 1/12.5, 1/15, 1/20, 1/25, 1/30, 1/40, 1/50, 1/60, 1/80, 1/100, 1/120, 1/160, 1/200, **1/240**
		30	1/300, 1/375, 1/450
		35	1/600, 1/750, 1/900, **1/1200**, **1/1500**
	3-Phase 0.2 kW	30	1/5, 1/7.5, 1/10, 1/12.5, 1/15, 1/20, 1/25, 1/30, 1/40, 1/50, 1/60, 1/80, 1/100, 1/120, 1/160, **1/200**, **1/240**
		35	1/300, 1/375, **1/450**
		45	1/600, 1/750, **1/900**, **1/1200**, **1/1500**
	3-Phase 0.4 kW	35	1/5, 1/7.5, 1/10, 1/12.5, 1/15, 1/20, 1/25, 1/30, 1/40, 1/50, 1/60, 1/80, 1/100, 1/120, **1/160**, **1/200**, **1/240**
		45	1/300, 1/375, **1/450**
		55	**1/600**, **1/750**, **1/900**, **1/1200**, **1/1500**
	3-Phase 0.75 kW	45	1/5, 1/7.5, 1/10, 1/12.5, 1/15, 1/20, 1/25, 1/30, 1/40, 1/50, 1/60, 1/80, 1/100, 1/120, **1/160**, **1/200**, **1/240**
		55	**1/300**, **1/375**, **1/450**
	(Note 1) 3-Phase 1.5 kW	55	1/5, 1/7.5, 1/10, 1/12.5, 1/15, 1/20, 1/25, 1/30, 1/40, 1/50, 1/60, 1/80, 1/100, 1/120, **1/160**, **1/200**, **1/240**
	(Note 1) 3-Phase 2.2 kW	55	1/5, 1/7.5, 1/10, 1/12.5, 1/15, 1/20, 1/25, 1/30, 1/40, 1/50, 1/60, 1/80, **1/100**, **1/120**

Note 1: IP65 gearmotors with a brake are not available for 1.5 kW and 2.2 kW.
Note 2: ▭ indicates a limited torque type. Please make sure to check the allowable output shaft torque in the performance table.

MID Series <Right Angle Hollow Bore/FAS Type>

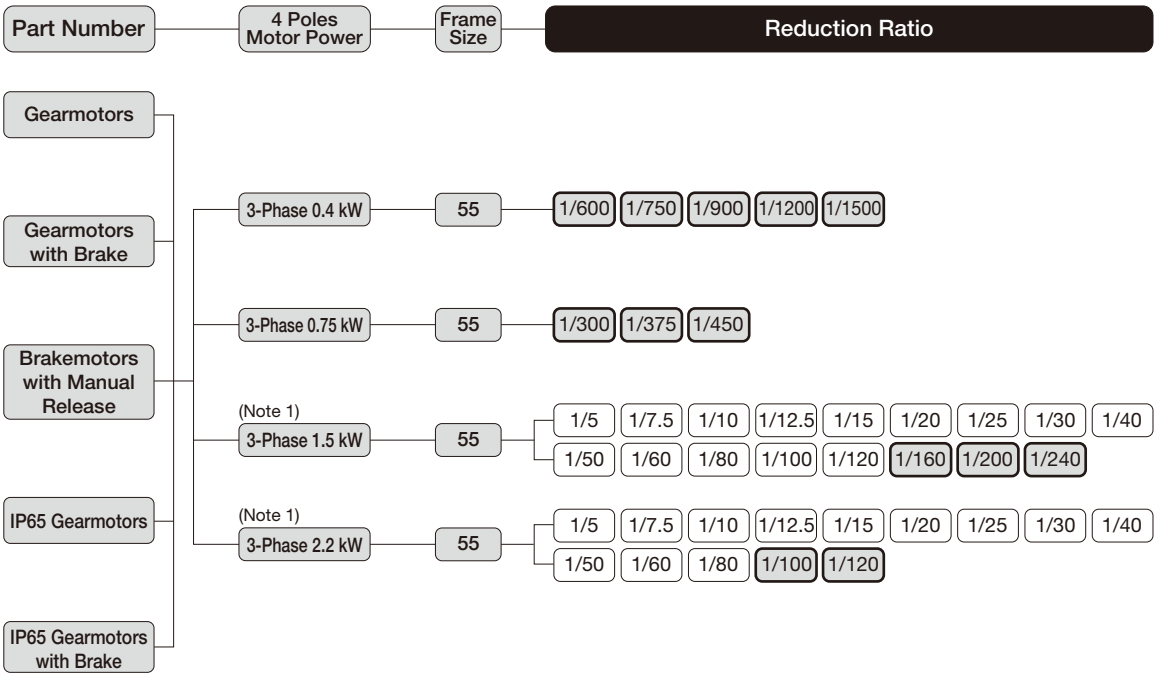

Note 1: IP65 gearmotors with a brake are not available for 1.5 kW and 2.2 kW.
Note 2: ▭ indicates a limited torque type. Please make sure to check the allowable output shaft torque in the performance table.

MID Series <Right Angle Shaft/FF Type>

Part Number	4 Poles Motor Power	Frame Size	Shaft Arrangement	Reduction Ratio
Gearmotors / Gearmotors with Brake	3-Phase 0.1 kW	22	L, R, T	1/10, 1/12.5, 1/15, 1/20, 1/25, 1/30, 1/40, 1/50, 1/60, 1/80, 1/100, 1/120, 1/160, 1/200, **1/240**
	3-Phase 0.2 kW	28	L, R, T	1/5, 1/7.5, 1/10, 1/12.5, 1/15, 1/20, 1/25, 1/30, 1/40, 1/50, 1/60, 1/80, 1/100, 1/120, 1/160, **1/200**, **1/240**
	3-Phase 0.4 kW	32	L, R, T	1/5, 1/7.5, 1/10, 1/12.5, 1/15, 1/20, 1/25, 1/30, 1/40, 1/50, 1/60, 1/80, 1/100, 1/120, **1/160**, **1/200**, **1/240**
	3-Phase 0.75 kW	40	L, R, T	1/5, 1/7.5, 1/10, 1/12.5, 1/15, 1/20, 1/25, 1/30, 1/40, 1/50, 1/60, 1/80, 1/100, 1/120, **1/160**, **1/200**, **1/240**

Note 1: Please note that water-resistant specification of right angle shafts is not available.
Note 2: ▭ indicates a limited torque type. Please make sure to check the allowable output shaft torque in the performance table.

MID Series <Concentric Right Angle Hollow Bore/F3S Type>

Part Number	4 Poles Motor Power	Frame Size	Reduction Ratio
Gearmotors, Gearmotors with Brake, Brakemotors with Manual Release, IP65 Gearmotors, IP65 Gearmotors with Brake	3-Phase 0.1 kW	20	1/5, 1/7.5, 1/10, 1/12.5, 1/15, 1/20, 1/25, 1/30, 1/40, 1/50, 1/60
		25	1/80, 1/100, 1/120, 1/160, 1/200, 1/240
	3-Phase 0.2 kW	(Note 1) 20	1/5, 1/7.5, 1/10, 1/12.5, 1/15, 1/20, 1/25, 1/30
		25	1/5, 1/7.5, 1/10, 1/12.5, 1/15, 1/20, 1/25, 1/30, 1/40, 1/50, 1/60
		30	1/80, 1/100, 1/120, 1/160, 1/200, 1/240
	3-Phase 0.4 kW	(Note 1) 25	1/5, 1/7.5, 1/10, 1/12.5, 1/15, 1/20, 1/25, 1/30
		30	1/5, 1/7.5, 1/10, 1/12.5, 1/15, 1/20, 1/25, 1/30, 1/40, 1/50, 1/60
		35	1/80, 1/100, 1/120, 1/160, 1/200, 1/240
	3-Phase 0.75 kW	(Note 1) 30	1/5, 1/7.5, 1/10, 1/12.5, 1/15, 1/20, 1/25, 1/30
		35	1/5, 1/7.5, 1/10, 1/12.5, 1/15, 1/20, 1/25, 1/30, 1/40, 1/50, 1/60
		45	1/80, 1/100, 1/120, 1/160, 1/200, 1/240
	(Note 2) 3-Phase 1.5 kW	(Note 1) 35	1/5, 1/7.5, 1/10, 1/12.5, 1/15, 1/20, 1/25, 1/30
		45	1/5, 1/7.5, 1/10, 1/12.5, 1/15, 1/20, 1/25, 1/30, 1/40, 1/50, 1/60
	(Note 2) 3-Phase 2.2 kW	45	1/5, 1/7.5, 1/10, 1/12.5, 1/15, 1/20, 1/25, 1/30

Note 1: Small frame size type
Note 2: IP65 gearmotors with a brake are not available for 1.5 kW and 2.2 kW.
Note 3: ▭ indicates a limited torque type. Please make sure to check the allowable output shaft torque in the performance table.

MID Series <Concentric Right Angle Shaft/F3F Type>

Part Number	4 Poles Motor Power	Frame Size	Shaft Arrangement	Reduction Ratio
Gearmotors / Gearmotors with Brake / Brakemotors with Manual Release	3-Phase 0.1 kW	18	L, R, T	1/5, 1/7.5, 1/10, 1/12.5, 1/15, 1/20, 1/25, 1/30, 1/40, 1/50, 1/60
		22	L, R, T	1/80, 1/100, 1/120, 1/160, 1/200, 1/240
	3-Phase 0.2 kW	(Note 1) 18	L, R, T	1/5, 1/7.5, 1/10, 1/12.5, 1/15, 1/20, 1/25, 1/30
		22	L, R, T	1/5, 1/7.5, 1/10, 1/12.5, 1/15, 1/20, 1/25, 1/30, 1/40, 1/50, 1/60
		28	L, R, T	1/80, 1/100, 1/120, 1/160, 1/200, 1/240
	3-Phase 0.4 kW	(Note 1) 22	L, R, T	1/5, 1/7.5, 1/10, 1/12.5, 1/15, 1/20, 1/25, 1/30
		28	L, R, T	1/5, 1/7.5, 1/10, 1/12.5, 1/15, 1/20, 1/25, 1/30, 1/40, 1/50, 1/60
		32	L, R, T	1/80, 1/100, 1/120, 1/160, 1/200, 1/240
	3-Phase 0.75 kW	(Note 1) 28	L, R, T	1/5, 1/7.5, 1/10, 1/12.5, 1/15, 1/20, 1/25, 1/30
		32	L, R, T	1/5, 1/7.5, 1/10, 1/12.5, 1/15, 1/20, 1/25, 1/30, 1/40, 1/50, 1/60
		40	L, R, T	1/80, 1/100, 1/120, 1/160, 1/200, 1/240
	3-Phase 1.5 kW	(Note 1) 32	L, R, T	1/5, 1/7.5, 1/10, 1/12.5, 1/15, 1/20, 1/25, 1/30
		40	L, R, T	1/5, 1/7.5, 1/10, 1/12.5, 1/15, 1/20, 1/25, 1/30, 1/40, 1/50, 1/60
	3-Phase 2.2 kW	40	L, R, T	1/5, 1/7.5, 1/10, 1/12.5, 1/15, 1/20, 1/25, 1/30

Note 1: Small frame size type
Note 2: Please note that water-resistant specification of concentric right angle shaft is not available.
Note 3: ▭ indicates a limited torque type. Please make sure to check the allowable output shaft torque in the performance table.

Global Standard Gearmotors Model, Motor Characteristics Table

MINI Series <G Type>

■ 3-Phase Standard Voltage

Power (W)	Voltage (V)	Frequency (Hz)	Frame Size	Rated Current (A)	Rated Speed (r/min)	Startup Current (A)
15	200/200/220	50/60/60	12	0.13/0.13/0.13	1350/1550/1610	0.30/0.29/0.27
			22	0.13/0.13/0.13	1350/1550/1610	0.30/0.29/0.27
25	200/200/220	50/60/60	12	0.18/0.18/0.19	1320/1520/1590	0.44/0.42/0.46
			15	0.17/0.17/0.17	1310/1520/1580	0.42/0.40/0.42
			22	0.18/0.18/0.19	1320/1520/1590	0.44/0.42/0.46
			28	0.17/0.17/0.17	1310/1520/1580	0.42/0.40/0.42
40	200/200/220	50/60/60	15	0.28/0.26/0.27	1320/1540/1590	0.64/0.61/0.75
			18	0.20/0.21/0.21	1370/1590/1640	0.68/0.64/0.71
			28	0.28/0.26/0.27	1320/1540/1590	0.64/0.61/0.75
			32	0.28/0.26/0.27	1320/1540/1590	0.64/0.61/0.75
60	200/200/220	50/60/60	15	0.36/0.35/0.36	1300/1520/1570	1.04/0.97/1.07
			18	0.30/0.32/0.31	1370/1620/1650	1.10/1.03/1.14
			28	0.36/0.35/0.36	1300/1520/1570	1.04/0.97/1.07
			32	0.36/0.35/0.36	1300/1520/1570	1.04/0.97/1.07
90	200/200/220	50/60/60	15	0.49/0.50/0.50	1300/1500/1550	1.25/1.33/1.38
			18	0.44/0.46/0.44	1360/1580/1630	1.59/1.50/1.66
			28	0.49/0.50/0.50	1300/1500/1550	1.25/1.33/1.38
			32	0.49/0.50/0.50	1300/1500/1550	1.25/1.33/1.38
			40	0.44/0.46/0.44	1360/1580/1630	1.59/1.50/1.66

■ 3-Phase High Voltage (400 V Class)

Power (W)	Voltage (V)	Frequency (Hz)	Frame Size	Rated Current (A)	Rated Speed (r/min)	Startup Current (A)
15	380/400/400/440	50/50/60/60	12	0.11/0.12/0.10/0.11	1400/1400/1700/1700	0.27/0.29/0.27/0.30
			22	0.11/0.12/0.10/0.11	1400/1400/1700/1700	0.27/0.29/0.27/0.30
25	380/400/400/440	50/50/60/60	12	0.11/0.12/0.11/0.12	1350/1400/1600/1650	0.27/0.28/0.26/0.29
			15	0.09/0.09/0.09/0.09	1300/1350/1550/1600	0.20/0.21/0.20/0.22
			22	0.11/0.12/0.11/0.12	1350/1400/1600/1650	0.27/0.28/0.26/0.29
			28	0.09/0.09/0.09/0.09	1300/1350/1550/1600	0.20/0.21/0.20/0.22
40	380/400/400/440	50/50/60/60	15	0.13/0.14/0.13/0.14	1300/1350/1550/1600	0.33/0.35/0.33/0.37
			18	0.10/0.10/0.10/0.10	1350/1400/1600/1650	0.32/0.34/0.32/0.35
			28	0.13/0.14/0.13/0.14	1300/1350/1550/1600	0.33/0.35/0.33/0.37
			32	0.13/0.14/0.13/0.14	1300/1350/1550/1600	0.33/0.35/0.33/0.37
60	380/400/400/440	50/50/60/60	15	0.17/0.17/0.17/0.17	1300/1350/1550/1600	0.43/0.46/0.43/0.47
			18	0.16/0.16/0.16/0.16	1350/1400/1600/1650	0.48/0.51/0.49/0.54
			28	0.17/0.17/0.17/0.17	1300/1350/1550/1600	0.43/0.46/0.43/0.47
			32	0.17/0.17/0.17/0.17	1300/1350/1550/1600	0.43/0.46/0.43/0.47
90	380/400/400/440	50/50/60/60	15	0.26/0.26/0.26/0.26	1300/1350/1550/1600	0.70/0.74/0.69/0.77
			18	0.23/0.23/0.24/0.24	1350/1350/1600/1650	0.73/0.78/0.74/0.81
			28	0.26/0.26/0.26/0.26	1300/1350/1550/1600	0.70/0.74/0.69/0.77
			32	0.26/0.26/0.26/0.26	1300/1350/1550/1600	0.70/0.74/0.69/0.77
			40	0.23/0.23/0.24/0.24	1350/1350/1600/1650	0.73/0.78/0.74/0.81

Global Standards Conformance

■ 1-Phase Standard Voltage

Power (W)	Voltage (V)	Frequency (Hz)	Frame Size	Rated Current (A)	Rated Speed (r/min)	Startup Current (A)	Capacitor (μF)
15	100/100	50/60	12	0.35/0.33	1390/1680	0.73/0.66	5
			22	0.35/0.33	1390/1680	0.73/0.66	5
25	100/100	50/60	12	0.45/0.48	1350/1630	0.86/0.79	7
			15	0.45/0.45	1370/1640	1.01/0.93	7
			22	0.45/0.48	1350/1630	0.86/0.79	7
			28	0.45/0.45	1370/1640	1.01/0.93	7
40	100/100	50/60	15	0.61/0.66	1380/1630	1.47/1.34	10
			18	0.62/0.65	1440/1720	2.18/2.00	10
			28	0.61/0.66	1380/1630	1.47/1.34	10
			32	0.61/0.66	1380/1630	1.47/1.34	10
60	100/100	50/60	15	0.90/1.00	1380/1650	2.13/1.95	15
			18	0.85/1.00	1430/1700	2.60/2.41	15
			28	0.90/1.00	1380/1650	2.13/1.95	15
			32	0.90/1.00	1380/1650	2.13/1.95	15
90	100/100	50/60	15	1.30/1.40	1350/1600	2.90/2.70	20
			18	1.20/1.40	1400/1680	3.32/3.10	20
			28	1.30/1.40	1350/1600	2.90/2.70	20
			32	1.30/1.40	1350/1600	2.90/2.70	20
			40	1.20/1.40	1400/1680	3.32/3.10	20

■ 1-Phase High Voltage (200 V Class)

Power (W)	Voltage (V)	Frequency (Hz)	Frame Size	Rated Current (A)	Rated Speed (r/min)	Startup Current (A)	Capacitor (μF)
15	200/200	50/60	12	0.18/0.17	1360/1620	0.35/0.32	1.0
			22	0.18/0.17	1360/1620	0.35/0.32	1.0
25	200/200	50/60	12	0.24/0.23	1340/1600	0.48/0.44	1.5
			15	0.23/0.23	1340/1600	0.49/0.44	1.5
			22	0.24/0.23	1340/1600	0.48/0.44	1.5
			28	0.23/0.23	1340/1600	0.49/0.44	1.5
40	200/200	50/60	15	0.29/0.34	1340/1610	0.64/0.61	2.5
			18	0.31/0.34	1430/1700	1.01/0.92	2.5
			28	0.29/0.34	1340/1610	0.64/0.61	2.5
			32	0.29/0.34	1340/1610	0.64/0.61	2.5
60	200/200	50/60	15	0.42/0.47	1370/1640	1.07/0.98	3.5
			18	0.42/0.48	1420/1690	1.34/1.25	3.5
			28	0.42/0.47	1370/1640	1.07/0.98	3.5
			32	0.42/0.47	1370/1640	1.07/0.98	3.5
90	200/200	50/60	15	0.62/0.67	1340/1600	1.46/1.36	5
			18	0.62/0.69	1400/1680	1.72/1.57	5
			28	0.62/0.67	1340/1600	1.46/1.36	5
			32	0.62/0.67	1340/1600	1.46/1.36	5
			40	0.62/0.69	1400/1680	1.72/1.57	5

MINI Series <H Type>

■ 3-Phase Standard Voltage

Power (W)	Voltage (V)	Frequency (Hz)	Frame Size	Rated Current (A)	Rated Speed (r/min)	Startup Current (A)
15	200/200/220	50/60/60	15	0.13/0.13/0.13	1350/1550/1610	0.30/0.29/0.27
			22	0.13/0.13/0.13	1350/1550/1610	0.30/0.29/0.27
25	200/200/220	50/60/60	15	0.18/0.18/0.19	1320/1520/1590	0.44/0.42/0.46
			22	0.18/0.18/0.19	1320/1520/1590	0.44/0.42/0.46
			28	0.17/0.17/0.17	1310/1520/1580	0.42/0.40/0.42
40	200/200/220	50/60/60	18	0.28/0.26/0.27	1320/1540/1590	0.64/0.61/0.75
			28	0.28/0.26/0.27	1320/1540/1590	0.64/0.61/0.75
			32	0.28/0.26/0.27	1320/1540/1590	0.64/0.61/0.75
60	200/200/220	50/60/60	18	0.36/0.35/0.36	1300/1520/1570	1.04/0.97/1.07
			28	0.36/0.35/0.36	1300/1520/1570	1.04/0.97/1.07
			32	0.36/0.35/0.36	1300/1520/1570	1.04/0.97/1.07
90	200/200/220	50/60/60	18	0.49/0.50/0.50	1300/1500/1550	1.25/1.33/1.38
			28	0.49/0.50/0.50	1300/1500/1550	1.25/1.33/1.38
			32	0.49/0.50/0.50	1300/1500/1550	1.25/1.33/1.38
			40	0.44/0.46/0.44	1360/1580/1630	1.59/1.50/1.66

■ 3-Phase High Voltage (400 V Class)

Power (W)	Voltage (V)	Frequency (Hz)	Frame Size	Rated Current (A)	Rated Speed (r/min)	Startup Current (A)
15	380/400/400/440	50/50/60/60	15	0.11/0.12/0.10/0.11	1400/1400/1700/1700	0.27/0.29/0.27/0.30
			22	0.11/0.12/0.10/0.11	1400/1400/1700/1700	0.27/0.29/0.27/0.30
25	380/400/400/440	50/50/60/60	15	0.11/0.12/0.11/0.12	1350/1400/1600/1650	0.27/0.28/0.26/0.29
			22	0.11/0.12/0.11/0.12	1350/1400/1600/1650	0.27/0.28/0.26/0.29
			28	0.09/0.09/0.09/0.09	1300/1350/1550/1600	0.20/0.21/0.20/0.22
40	380/400/400/440	50/50/60/60	18	0.13/0.14/0.13/0.14	1300/1350/1550/1600	0.33/0.35/0.33/0.37
			28	0.13/0.14/0.13/0.14	1300/1350/1550/1600	0.33/0.35/0.33/0.37
			32	0.13/0.14/0.13/0.14	1300/1350/1550/1600	0.33/0.35/0.33/0.37
60	380/400/400/440	50/50/60/60	18	0.17/0.17/0.17/0.17	1300/1350/1550/1600	0.43/0.46/0.43/0.47
			28	0.17/0.17/0.17/0.17	1300/1350/1550/1600	0.43/0.46/0.43/0.47
			32	0.17/0.17/0.17/0.17	1300/1350/1550/1600	0.43/0.46/0.43/0.47
90	380/400/400/440	50/50/60/60	18	0.26/0.26/0.26/0.26	1300/1350/1550/1600	0.70/0.74/0.69/0.77
			28	0.26/0.26/0.26/0.26	1300/1350/1550/1600	0.70/0.74/0.69/0.77
			32	0.26/0.26/0.26/0.26	1300/1350/1550/1600	0.70/0.74/0.69/0.77
			40	0.23/0.23/0.24/0.24	1350/1350/1600/1650	0.73/0.78/0.74/0.81

Global Standards Conformance

■ 1-Phase Standard Voltage

Power (W)	Voltage (V)	Frequency (Hz)	Frame Size	Rated Current (A)	Rated Speed (r/min)	Startup Current (A)	Capacitor (μF)
15	100/100	50/60	15	0.35/0.33	1390/1680	0.73/0.66	5
			22	0.35/0.33	1390/1680	0.73/0.66	5
25	100/100	50/60	15	0.45/0.48	1350/1630	0.86/0.79	7
			22	0.45/0.48	1350/1630	0.86/0.79	7
			28	0.45/0.45	1370/1640	1.01/0.93	7
40	100/100	50/60	18	0.61/0.66	1380/1630	1.47/1.34	10
			28	0.61/0.66	1380/1630	1.47/1.34	10
			32	0.61/0.66	1380/1630	1.47/1.34	10
60	100/100	50/60	18	0.90/1.00	1380/1650	2.13/1.95	15
			28	0.90/1.00	1380/1650	2.13/1.95	15
			32	0.90/1.00	1380/1650	2.13/1.95	15
90	100/100	50/60	18	1.30/1.40	1350/1600	2.90/2.70	20
			28	1.30/1.40	1350/1600	2.90/2.70	20
			32	1.30/1.40	1350/1600	2.90/2.70	20
			40	1.20/1.40	1400/1680	3.32/3.10	20

■ 1-Phase High Voltage (200 V Class)

Power (W)	Voltage (V)	Frequency (Hz)	Frame Size	Rated Current (A)	Rated Speed (r/min)	Startup Current (A)	Capacitor (μF)
15	200/200	50/60	15	0.18/0.17	1360/1620	0.35/0.32	1.0
			22	0.18/0.17	1360/1620	0.35/0.32	1.0
25	200/200	50/60	15	0.24/0.23	1340/1600	0.48/0.44	1.5
			22	0.24/0.23	1340/1600	0.48/0.44	1.5
			28	0.23/0.23	1340/1600	0.49/0.44	1.5
40	200/200	50/60	18	0.29/0.34	1340/1610	0.64/0.61	2.5
			28	0.29/0.34	1340/1610	0.64/0.61	2.5
			32	0.29/0.34	1340/1610	0.64/0.61	2.5
60	200/200	50/60	18	0.42/0.47	1370/1640	1.07/0.98	3.5
			28	0.42/0.47	1370/1640	1.07/0.98	3.5
			32	0.42/0.47	1370/1640	1.07/0.98	3.5
90	200/200	50/60	18	0.62/0.67	1340/1600	1.46/1.36	5
			28	0.62/0.67	1340/1600	1.46/1.36	5
			32	0.62/0.67	1340/1600	1.46/1.36	5
			40	0.62/0.69	1400/1680	1.72/1.57	5

MINI Series <Concentric Right Angle Hollow Bore/F2S Type>

■ 3-Phase Standard Voltage

Power (W)	Voltage (V)	Frequency (Hz)	Frame Size	Rated Current (A)	Rated Speed (r/min)	Startup Current (A)
15	200/200/220	50/60/60	12	0.13/0.13/0.13	1350/1550/1610	0.30/0.29/0.27
25	200/200/220	50/60/60	12	0.18/0.18/0.19	1320/1520/1590	0.44/0.42/0.46
40	200/200/220	50/60/60	15	0.28/0.26/0.27	1320/1540/1590	0.64/0.61/0.75
60	200/200/220	50/60/60	15	0.36/0.35/0.36	1300/1520/1570	1.04/0.97/1.07
90	200/200/220	50/60/60	15	0.49/0.50/0.50	1300/1500/1550	1.25/1.33/1.38

■ 3-Phase High Voltage (400 V Class)

Power (W)	Voltage (V)	Frequency (Hz)	Frame Size	Rated Current (A)	Rated Speed (r/min)	Startup Current (A)
15	380/400/400/440	50/50/60/60	12	0.11/0.12/0.10/0.11	1400/1400/1700/1700	0.27/0.29/0.27/0.30
25	380/400/400/440	50/50/60/60	12	0.11/0.12/0.11/0.12	1350/1400/1600/1650	0.27/0.28/0.26/0.29
40	380/400/400/440	50/50/60/60	15	0.13/0.14/0.13/0.14	1300/1350/1550/1600	0.33/0.35/0.33/0.37
60	380/400/400/440	50/50/60/60	15	0.17/0.17/0.17/0.17	1300/1350/1550/1600	0.43/0.46/0.43/0.47
90	380/400/400/440	50/50/60/60	15	0.26/0.26/0.26/0.26	1300/1350/1550/1600	0.70/0.74/0.69/0.77

■ 1-Phase Standard Voltage

Power (W)	Voltage (V)	Frequency (Hz)	Frame Size	Rated Current (A)	Rated Speed (r/min)	Startup Current (A)	Capacitor (μF)
15	100/100	50/60	12	0.35/0.33	1390/1680	0.73/0.66	5
25	100/100	50/60	12	0.45/0.48	1350/1630	0.86/0.79	7
40	100/100	50/60	15	0.61/0.66	1380/1630	1.47/1.34	10
60	100/100	50/60	15	0.90/1.00	1380/1650	2.13/1.95	15
90	100/100	50/60	15	1.30/1.40	1350/1600	2.90/2.70	20

■ 1-Phase High Voltage (200 V Class)

Power (W)	Voltage (V)	Frequency (Hz)	Frame Size	Rated Current (A)	Rated Speed (r/min)	Startup Current (A)	Capacitor (μF)
15	200/200	50/60	12	0.18/0.17	1360/1620	0.35/0.32	1.0
25	200/200	50/60	12	0.24/0.23	1340/1600	0.48/0.44	1.5
40	200/200	50/60	15	0.29/0.34	1340/1610	0.64/0.61	2.5
60	200/200	50/60	15	0.42/0.47	1370/1640	1.07/0.98	3.5
90	200/200	50/60	15	0.62/0.67	1340/1600	1.46/1.36	5

MINI Series <Concentric Right Angle Shaft/F2F Type>

■ 3-Phase Standard Voltage

Power (W)	Voltage (V)	Frequency (Hz)	Frame Size	Rated Current (A)	Rated Speed (r/min)	Startup Current (A)
15	200/200/220	50/60/60	15	0.13/0.13/0.13	1350/1550/1610	0.30/0.29/0.27
25	200/200/220	50/60/60	15	0.18/0.18/0.19	1320/1520/1590	0.44/0.42/0.46
40	200/200/220	50/60/60	18	0.28/0.26/0.27	1320/1540/1590	0.64/0.61/0.75
60	200/200/220	50/60/60	18	0.36/0.35/0.36	1300/1520/1570	1.04/0.97/1.07
90	200/200/220	50/60/60	18	0.49/0.50/0.50	1300/1500/1550	1.25/1.33/1.38

■ 3-Phase High Voltage (400 V Class)

Power (W)	Voltage (V)	Frequency (Hz)	Frame Size	Rated Current (A)	Rated Speed (r/min)	Startup Current (A)
15	380/400/400/440	50/50/60/60	15	0.11/0.12/0.10/0.11	1400/1400/1700/1700	0.27/0.29/0.27/0.30
25	380/400/400/440	50/50/60/60	15	0.11/0.12/0.11/0.12	1350/1400/1600/1650	0.27/0.28/0.26/0.29
40	380/400/400/440	50/50/60/60	18	0.13/0.14/0.13/0.14	1300/1350/1550/1600	0.33/0.35/0.33/0.37
60	380/400/400/440	50/50/60/60	18	0.17/0.17/0.17/0.17	1300/1350/1550/1600	0.43/0.46/0.43/0.47
90	380/400/400/440	50/50/60/60	18	0.26/0.26/0.26/0.26	1300/1350/1550/1600	0.70/0.74/0.69/0.77

■ 1-Phase Standard Voltage

Power (W)	Voltage (V)	Frequency (Hz)	Frame Size	Rated Current (A)	Rated Speed (r/min)	Startup Current (A)	Capacitor (μF)
15	100/100	50/60	15	0.35/0.33	1390/1680	0.73/0.66	5
25	100/100	50/60	15	0.45/0.48	1350/1630	0.86/0.79	7
40	100/100	50/60	18	0.61/0.66	1380/1630	1.47/1.34	10
60	100/100	50/60	18	0.90/1.00	1380/1650	2.13/1.95	15
90	100/100	50/60	18	1.30/1.40	1350/1600	2.90/2.70	20

■ 1-Phase High Voltage (200 V Class)

Power (W)	Voltage (V)	Frequency (Hz)	Frame Size	Rated Current (A)	Rated Speed (r/min)	Startup Current (A)	Capacitor (μF)
15	200/200	50/60	15	0.18/0.17	1360/1620	0.35/0.32	1.0
25	200/200	50/60	15	0.24/0.23	1340/1600	0.48/0.44	1.5
40	200/200	50/60	18	0.29/0.34	1340/1610	0.64/0.61	2.5
60	200/200	50/60	18	0.42/0.47	1370/1640	1.07/0.98	3.5
90	200/200	50/60	18	0.62/0.67	1340/1600	1.46/1.36	5

MID Series

■ 3-Phase Standard Voltage 3 Rating [Model (Supply Voltage): N]

Typical Motor Characteristics

Motor Power	Voltage	Frequency	Rated Speed	Current Characteristics		Torque Characteristics		Efficiency
				Rated Current	Startup Current	Startup Torque	Breakdown Torque	
	V	Hz	r/min	A	A	%	%	%
0.1 kW	200	50	1410	0.61	2.39	215	258	–
	200	60	1690	0.54	2.27	190	238	–
	220	60	1710	0.54	2.52	245	300	–
0.2 kW IE2	200	50	1400	1.1	4.70	215	248	65.9
	200	60	1680	1.0	4.35	195	225	68.0
	220	60	1700	1.0	4.85	238	279	68.0
0.4 kW IE2	200	50	1400	2.1	9.50	220	265	73.5
	200	60	1680	1.8	8.60	190	234	72.0
	220	60	1700	1.8	9.60	236	289	72.0
0.75 kW IE3	200	50	1450	3.5	21.8	266	349	82.5
	200	60	1740	3.2	19.0	220	304	85.5
	220	60	1750	3.1	21.1	276	374	85.5
1.5 kW IE3	200	50	1450	6.7	45.6	232	343	85.3
	200	60	1740	6.1	40.3	193	301	86.5
	220	60	1760	5.9	45.1	239	373	86.5
2.2 kW IE3	200	50	1470	9.3	70.3	241	347	86.7
	200	60	1760	8.6	56.9	190	285	89.5
	220	60	1770	8.2	63.7	237	351	89.5

■ 3-Phase High Voltage (400 V Class) 4 Rating [Model (Supply Voltage): W]

Typical Motor Characteristics

Motor Power	Voltage	Frequency	Rated Speed	Current Characteristics		Torque Characteristics		Efficiency
				Rated Current	Startup Current	Startup Torque	Breakdown Torque	
	V	Hz	r/min	A	A	%	%	%
0.1 kW	380	50	1400	0.31	1.12	180	224	–
	400	50	1410	0.31	1.18	199	250	–
	400	60	1690	0.28	1.12	180	233	–
	440	60	1720	0.28	1.22	217	285	–
0.2 kW IE2	380	50	1390	0.56	2.29	192	230	65.9
	400	50	1400	0.56	2.38	220	257	65.9
	400	60	1680	0.5	2.29	214	239	68.0
	440	60	1710	0.5	2.48	258	294	68.0
0.4 kW IE2	380	50	1390	1.0	4.35	194	225	73.5
	400	50	1400	1.0	4.65	216	258	73.5
	400	60	1680	0.9	4.30	184	232	72.0
	440	60	1710	0.9	4.75	221	286	72.0
0.75 kW IE3	380	50	1440	1.73	10.2	252	311	82.5
	400	50	1450	1.72	10.8	269	348	82.5
	400	60	1740	1.58	9.8	224	309	85.5
	440	60	1750	1.54	10.7	282	377	85.5
1.5 kW IE3	380	50	1450	3.4	21.9	211	309	85.3
	400	50	1450	3.4	23.2	237	346	85.3
	400	60	1750	3.1	20.4	197	300	86.5
	440	60	1760	3.0	22.8	244	369	86.5
2.2 kW IE3	380	50	1440	4.5	30.0	209	306	86.7
	400	50	1450	4.4	32.0	234	341	86.7
	400	60	1740	4.2	25.0	180	270	89.5
	440	60	1750	3.9	28.0	210	331	89.5

■ 3-Phase Special Voltage (Dual Voltage) for South Korea/Taiwan [Model (Supply Voltage): K]

Typical Motor Characteristics

Motor Power	Voltage	Frequency	Rated Speed	Current Characteristics		Torque Characteristics		Efficiency
				Rated Current	Startup Current	Startup Torque	Breakdown Torque	
	V	Hz	r/min	A	A	%	%	%
0.1 kW	220	60	1680	0.52	1.90	171	214	–
	380	60	1680	0.30	1.10	167	213	–
0.2 kW IE2	220	60	1680	0.93	3.70	196	232	68.0
	380	60	1680	0.52	2.20	196	229	68.0
0.4 kW IE2	220	60	1670	1.7	7.10	199	209	72.0
	380	60	1670	1.0	4.09	197	208	72.0
0.75 kW IE3	220	60	1740	2.9	16.9	210	291	85.5
	380	60	1740	1.7	9.8	216	294	85.5
1.5 kW IE3	220	60	1760	5.9	45.1	239	373	86.5
	380	60	1760	3.4	25.8	255	366	86.5
2.2 kW IE3	220	60	1770	8.3	65.0	205	375	89.5
	380	60	1770	4.8	38.0	230	360	89.5

■ 3-Phase Special Voltage (Dual Voltage) for China [Model (Supply Voltage): C]

Typical Motor Characteristics

Motor Power	Voltage	Frequency	Rated Speed	Current Characteristics		Torque Characteristics		Efficiency
				Rated Current	Startup Current	Startup Torque	Breakdown Torque	
	V	Hz	r/min	A	A	%	%	%
0.1 kW	220	50	1400	0.55	1.94	180	224	–
	230	50	1410	0.54	2.03	197	245	–
	380	50	1400	0.31	1.12	180	224	–
0.2 kW IE2	220	50	1400	0.99	3.97	192	230	65.9
	230	50	1410	0.98	4.15	210	251	65.9
	380	50	1390	0.56	2.29	192	230	65.9
0.4 kW IE2	220	50	1390	1.8	7.63	194	225	73.5
	230	50	1400	1.8	7.88	212	246	73.5
	380	50	1390	1.0	4.43	194	225	73.5
0.75 kW IE3	220	50	1450	3.0	17.8	233	315	82.5
	230	50	1450	3.0	18.7	263	346	82.5
	380	50	1440	1.7	10.3	242	315	82.5
1.5 kW IE3	220	50	1450	5.9	38.5	214	312	85.3
	230	50	1450	5.9	40.4	240	348	85.3
	380	50	1450	3.4	22.1	219	314	85.3
2.2 kW IE3	220	50	1460	7.9	52.0	209	306	86.7
	230	50	1470	7.7	54.3	228	334	86.7
	380	50	1440	4.5	30.0	209	306	86.7

■ 3-Phase Special Voltage (Dual Voltage) for China/Korea/Taiwan [Model (Supply Voltage): D]

Typical Motor Characteristics

Motor Power	Voltage	Frequency	Rated Speed	Current Characteristics		Torque Characteristics		Efficiency
				Rated Current	Startup Current	Startup Torque	Breakdown Torque	
	V	Hz	r/min	A	A	%	%	%
0.1kW	220	50	1400	0.55	1.94	180	224	–
	220	60	1680	0.52	1.90	171	214	–
	380	50	1400	0.31	1.12	180	224	–
	380	60	1680	0.30	1.10	167	213	–
0.2kW IE2	220	50	1400	0.99	3.97	192	230	65.9
	220	60	1680	0.93	3.70	196	232	68.0
	380	50	1390	0.56	2.29	192	230	65.9
	380	60	1680	0.52	2.20	196	229	68.0
0.4kW IE2	220	50	1390	1.8	7.63	224	261	73.5
	220	60	1670	1.7	7.10	187	237	72.0
	380	50	1390	1.0	4.43	230	264	73.5
	380	60	1670	1.0	4.09	191	236	72.0
0.75kW IE3	220	50	1450	3.1	19.3	255	340	82.5
	220	60	1740	2.9	16.9	210	291	85.5
	380	50	1450	1.8	11.2	255	341	82.5
	380	60	1740	1.7	9.80	216	294	85.5

■ 3-Phase Special Voltage for Europe/North America [Model (Supply Voltage): E]

Typical Motor Characteristics

Motor Power	Voltage	Frequency	Rated Speed	Current Characteristics		Torque Characteristics		Efficiency
				Rated Current	Startup Current	Startup Torque	Breakdown Torque	
	V	Hz	r/min	A	A	%	%	%
0.1 kW	415	50	1390	0.30	1.06	205	238	–
	440	50	1420	0.29	1.12	230	268	–
	480	60	1720	0.26	1.17	244	304	–
0.2 kW IE2	415	50	1370	0.50	1.75	189	213	65.9
	440	50	1400	0.50	1.86	212	239	65.9
	480	60	1700	0.45	2.00	239	267	68.0
0.4 kW IE2	415	50	1390	0.96	3.96	246	254	73.5
	440	50	1410	0.95	4.20	277	286	73.5
	480	60	1680	0.82	4.20	286	304	72.0
0.75 kW IE3	415	50	1440	1.54	8.6	214	284	82.5
	440	50	1450	1.52	9.3	251	325	82.5
	480	60	1750	1.36	9.0	242	342	85.5
1.5 kW IE3	415	50	1450	3.1	20.8	229	321	85.3
	440	50	1460	3.1	22.2	261	361	85.3
	480	60	1760	2.8	21.2	249	372	86.5
2.2 kW IE3	415	50	1460	4.3	33.1	247	353	86.7
	440	50	1470	4.3	35.5	283	401	86.7
	480	60	1770	3.8	29.8	203	310	89.5

■ 3-Phase Special Voltage (Dual Voltage) for North America/Europe [Model (Supply Voltage): U]

Typical Motor Characteristics

Motor Power	Voltage	Frequency	Rated Speed	Current Characteristics		Torque Characteristics		Efficiency
				Rated Current	Startup Current	Startup Torque	Breakdown Torque	
	V	Hz	r/min	A	A	%	%	%
0.75kW IE3	230	60	1760	3.1	22.3	301	412	85.5
	460	60	1760	1.5	11.2	300	414	85.5
	400	50	1450	1.7	10.8	274	347	82.5
1.5kW IE3	230	60	1760	5.9	44.9	242	385	86.5
	460	60	1760	2.9	22.6	245	393	86.5
	400	50	1450	3.3	23.2	273	334	85.3
2.2kW IE3	230	60	1770	7.9	65.2	226	369	89.5
	460	60	1770	4.0	34.8	246	380	89.5
	400	50	1470	4.5	36.3	250	350	86.7

■ 3-Phase Special Voltage (Dual Voltage) for North America/Europe [Model (Supply Voltage): A]

Typical Motor Characteristics

Motor Power	Voltage	Frequency	Rated Speed	Current Characteristics		Torque Characteristics		Efficiency
				Rated Current	Startup Current	Startup Torque	Breakdown Torque	
	V	Hz	r/min	A	A	%	%	%
0.1 kW	208	60	1690	0.54	2.35	200	263	–
	230	60	1730	0.57	2.62	243	329	–
	460	60	1730	0.29	1.26	231	310	–
	400	50	1410	0.31	1.21	230	260	–
0.2 kW IE2	208	60	1680	1.0	4.78	223	275	68.0
	230	60	1720	1.0	5.16	270	330	68.0
	460	60	1720	0.50	2.56	262	328	68.0
	400	50	1400	0.56	2.44	270	300	65.9
0.4 kW IE2	208	60	1680	1.8	8.90	204	257	72.0
	230	60	1720	1.8	9.76	251	311	72.0
	460	60	1720	0.9	4.73	239	297	72.0
	400	50	1400	1.0	4.78	250	290	73.5

■ 3-Phase Special Voltage for Canada [Model (Supply Voltage): M]

Typical Motor Characteristics

Motor Power	Voltage	Frequency	Rated Speed	Current Characteristics		Torque Characteristics		Efficiency
				Rated Current	Startup Current	Startup Torque	Breakdown Torque	
	V	Hz	r/min	A	A	%	%	%
0.1 kW	575	60	1700	0.20	0.87	200	273	–
0.2 kW IE2	575	60	1710	0.40	1.78	229	275	68.0
0.4 kW IE2	575	60	1700	0.68	3.51	249	289	72.0
0.75 kW IE3	575	60	1750	1.16	7.2	200	337	85.5
1.5 kW IE3	575	60	1760	2.2	17.0	250	349	86.5
2.2 kW IE3	575	60	1760	3.3	24.4	258	359	89.5

Gearboxes (Double Shaft Type)

This is an independent GTR gearbox unit (without the motor). You may order this unit in cases of:
- When only a gearbox is required
- When driving a gearbox with a special motor or a non-electric drive method
- When the input speed is different from the motor rated speed

Relationship between the input speed and the allowable output shaft torque

The allowable output shaft torque in the performance table is the value when the input speed is 1500 r/min. If using a gearbox at a different speed, the value calculated by multiplying the input speed by the allowable torque correction coefficient shown in the figure below is the allowable output shaft torque.

■ Allowable Torque Correction Coefficient by the Input Speed of the Gearbox

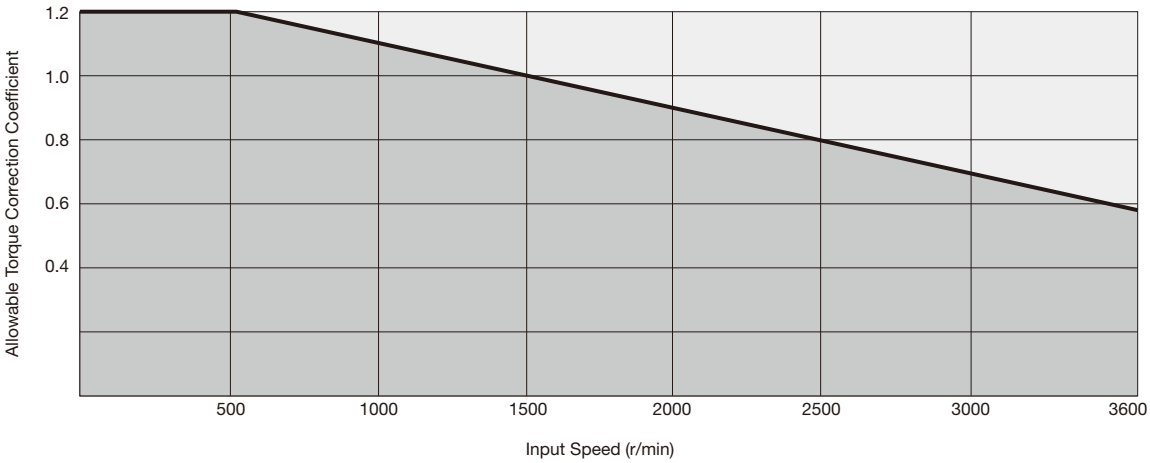

Note 1: Also with regard to the O.H.L., the value calculated by multiplying the input speed by the allowable torque correction coefficient shown in the figure above is the allowable output shaft torque.
Note 2: When using a gearbox at an input speed of 1800 r/min or more, the value calculated by multiplying the allowable moment of inertia J shown in [Table-2] on page 525 by $(1800/\text{input r/min})^2$ is the allowable moment of inertia J.

■ Example

When using the model H2L-32L-40-075 at an input speed of 2500 r/min, the allowable output shaft torque, allowable input/output shaft O.H.L., and allowable output shaft moment of inertia J of this model are as shown below.
Based on the figure above, the allowable torque correction coefficient at an input speed of 2500 r/min is 0.8, and the corrected values would be as below.

Allowable output shaft torque = 172 × 0.8 = 138 N·m
Allowable Input Shaft O.H.L. = 392 × 0.8 = 314 N
Allowable Output Shaft O.H.L. = 3430 × 0.8 = 2744 N

Moreover,

The output shaft allowable moment of inertia J is $0.003 \times (1800/2500)^2 \times 40^2 \approx 2.5$ kg·m^2

S-Type Gearboxes

GTR gearmotors are equipped with motors produced in-house. If you desire to mount another motor or a special motor (outdoor motor), please use this S-Type gearbox.
The motor can be mounted if their size of a flange matches to JEM1401-1991 standard.
- We request customer to prepare and mount the motor for the S-Type by their own.
- The color of the motor attached to the S-Type gearbox depends on the color in which the motor manufacturer specifies for the specific motor.
- When using a motor with special motor torque characteristics, such as a servo motor, select a gearbox model with care. A low backlash gearbox for servo motors is also available.

Motor mounting procedure

1. Check if the key is set correctly in the input pinion. (4 poles motor power class: 0.1 kW to 0.2 kW)
2. Align the position of the key with the flat surface area of the motor shaft or with the key groove, and insert the key.
3. Confirm that the motor guide portion is completely inserted, and tighten it with four bolts.

● Detailed Dimensions of Input Pinion Key Groove

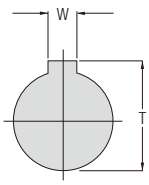

4 Poles Motor Power Class	W		T	
	Reference Dimension	Dimensional Tolerance	Reference Dimension	Dimensional Tolerance
0.1 kW	5	+0.05 +0.01	13	+0.1 0
0.2 kW	5	+0.05 +0.01	13	+0.1 0
0.4 kW	5	+0.05 +0.01	16	+0.2 0
0.75 kW	6	+0.05 +0.01	21.5	+0.2 0
1.5 kW	8	+0.05 +0.01	27	+0.2 0
2.2 kW	8	+0.05 +0.01	31	+0.2 0

Note: Please be sure to read the notes on page 643.

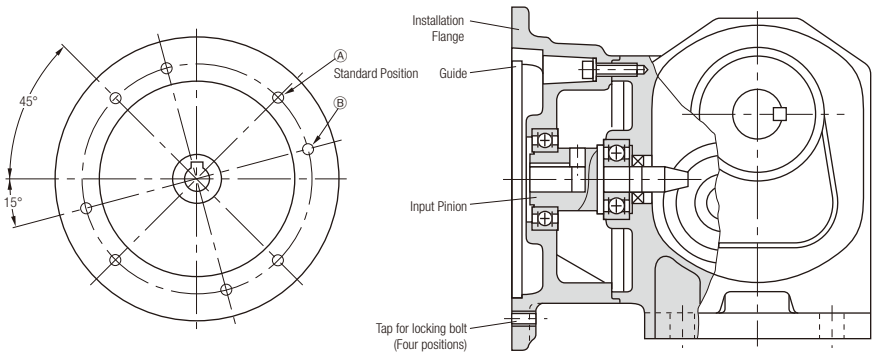

Note: In the case of a gearbox with a 4 poles motor power class of 0.4 kW and frame size 40 or 50, please note that the tightening bolt tap is in position Ⓑ. (Except for the F3 Type)
For precautions about the attachment of a motor to an S-Type gearbox, refer to page 643.

Detailed Dimensions of Double Shaft Type/ S-Type Gearboxes Input Shaft

MID Series

■ G3/GA Type Double Shaft Type

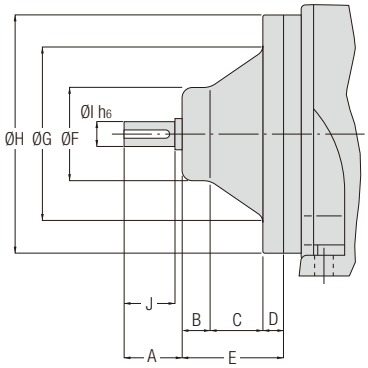

Dimension / Motor Power Class	A	B	C	D	E	F	G	H	I	J	Key
0.1 kW	28	13.5	25.5	10	49	45	80	115	12	25	4 × 4 × 22
0.2 kW	28	13.5	25.5	10	49	45	80	115	12	25	4 × 4 × 22
0.4 kW	32	13.5	27.5	12.5	53.5	52	92	128	15	30	5 × 5 × 27
0.75 kW	37	17	28.5	11	56.5	64	108	142	20	35	6 × 6 × 32
1.5 kW	42	21	42.5	11	74.5	74	129	165	25	40	8 × 7 × 35
2.2 kW	48	26	41.5	13	80.5	90	130	165	30	45	8 × 7 × 40

Note 1: The GA type is available only for an equivalent Motor Power of 0.4 kW to 2.2 kW.

■ G3/GA Type S-Type Gearbox

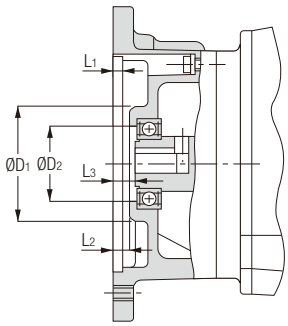

Dimension / Motor Power Class	L_1	L_2	L_3	D_1	D_2
0.1 kW	4.5	5.5	8.5	59	39
0.2 kW	4.5	5.5	8.5	59	39
0.4 kW	4.5	5.5	8.5	59	39
0.75 kW	4.5	5.5	10	67	47
1.5 kW	4.5	6.5	12.5	88	62
2.2 kW	5	7	13	96	70

Note 1: Each dimension represents a reference dimension. In particular, the L_2, D_1, and D_2 areas are black scale, and provide them with a sufficient allowance.
Note 2: The GA type is available only for an equivalent Motor Power of 0.4 kW to 2.2 kW.

Detailed Dimensions of Double Shaft Type/S-Type Gearboxes Input Shaft

■ H2 Type Double Shaft Type

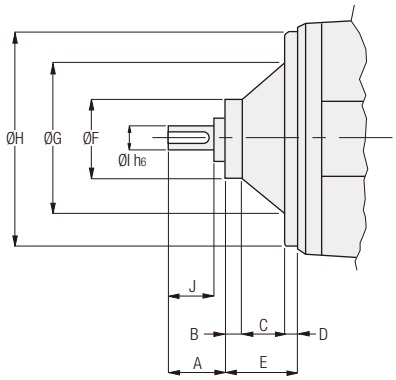

Dimension / Motor Power Class	A	B	C	D	E	F	G	H	I	J	Key
0.2 kW Frame sizes 22 to 28	28	10	22	8	40	43	80	114.5	12	25	4 × 4 × 22
0.2 kW Frame sizes 32 to 40	28	13.5	25.5	10	49	45	80	115	12	25	4 × 4 × 22
0.4 kW	32	10	26.5	10	46.5	48	92	127	15	30	5 × 5 × 27
0.75 kW	37	17	25.5	10	52.5	62	105	142	20	35	6 × 6 × 32
1.5 kW	42	21	42.5	11	74.5	74	129	165	25	40	8 × 7 × 35
2.2 kW	48	26	41.5	13	80.5	90	130	165	30	45	8 × 7 × 40

■ H2 Type S-Type Gearbox

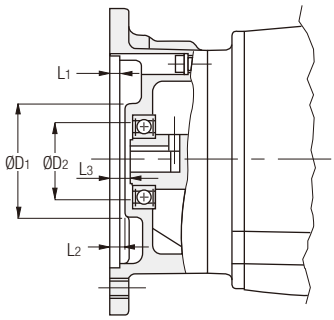

Dimension / Motor Power Class	L_1	L_2	L_3	D_1	D_2
0.1 kW	4.5	5.5	8.5	59	39
0.2 kW	4.5	5.5	8.5	59	39
0.4 kW	4.5	5.5	8.5	59	39
0.75 kW	4.5	5.5	10	67	47
1.5 kW	4.5	6.5	12.5	88	62
2.2 kW	5	7	13	96	70

Note 1: Each dimension represents a reference dimension. In particular, the L_2, D_1, and D_2 areas are black scale, and provide them with a sufficient allowance.

■ F/FA/F3 Type Double Shaft Type

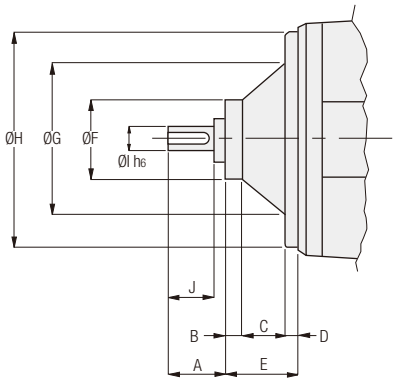

Dimension / Motor Power Class	A	B	C	D	E	F	G	H	I	J	Key
0.1 kW	28	10	22	8	40	43	80	114.5	12	25	4 × 4 × 22
0.2 kW	28	10	22	8	40	43	80	114.5	12	25	4 × 4 × 22
0.4 kW	32	10	26.5	10	46.5	48	92	127	15	30	5 × 5 × 27
0.75 kW	37	17	25.5	10	52.5	62	105	142	20	35	6 × 6 × 32
1.5 kW	42	21	42.5	11	74.5	74	129	165	25	40	8 × 7 × 35
2.2 kW	48	26	41.5	13	80.5	90	130	165	30	45	8 × 7 × 40

Note 1: The FA type is motor power equivalent 0.4 kW to 2.2 kW only.

■ F/FA/F3 Type S-Type Gearbox

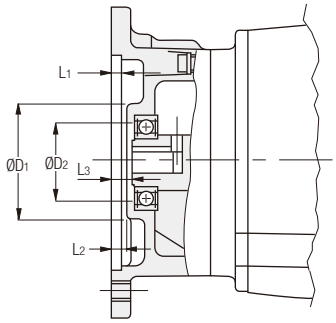

Dimension / Motor Power Class	L_1	L_2	L_3	D_1	D_2
0.1 kW	4.5	5.5	8.5	59	39
0.2 kW	4.5	5.5	8.5	59	39
0.4 kW	4.5	5.5	8.5	59	39
0.75 kW	4.5	5.5	10	67	47
1.5 kW	4.5	6.5	12.5	88	62
2.2 kW	5	7	13	96	70

Note 1: Each dimension represents a reference dimension. In particular, the L_2, D_1, and D_2 areas are black scale, and provide them with a sufficient allowance.
Note 2: The FA type is motor power equivalent 0.4 kW to 2.2 kW only.

Speed Control Gearmotors

Controller

■ Specifications

Type	U Type		P Type					
Product Name	SCU-100	SCU-200	SCP-101L	SCP-201L	SCP-102L	SCP-202L	SCP-103L	SCP-203L
Properties	The controller contains a speed control circuit, a capacitor, a speed setting device, and all other necessary items and can therefore be operated simply by connecting the lead wire with a connector. However, only the variable speed function is available.		The controller is an eight-pin plug-in type and can set the speed of the gearmotor with the speed setting volume on the front side. In addition to the variable speed function, instant stop, slow start/slow down, and parallel operation functions are available and can be selected according to the application.					
Shape	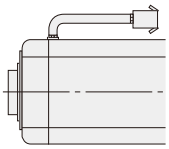		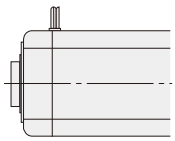					
Motor Power	15 W to 90 W							
1-phase supply voltage (Note 1) (Note 2)	100 V to 115 V (100) 200 V to 230 V (200)		100 V to 120 V (101, 102, 103) 200 V to 240 V (201, 202, 203)					
Variable speed range	50 to 1400 r/min (50 Hz), 50 to 1700 r/min (60 Hz)							
Speed fluctuation rate	±3 %							
Instant stop	×		○		○		○	
Slow start/ Slow down	×		×		○		○	
Parallel operation	×		×		×		○	
Lowering operation	×		×		×		×	
Remote operation distance	5 m		50 m		50 m		200 m	
Outline	Operation box type		Plug-in type (eight-pin)					
Ambient temperature	−10 °C to + 40 °C							

Note 1: The Single-phase supply voltage is the supply voltage of the controller. When using the controller with a voltage other than 100 V or 200 V, select a motor suitable for the voltage as well.
Note 2: The allowable variation range of the supply voltage is ±10 %. If the voltage is low, the rated torque may not be obtained, or rotations my become unstable.
Note 3: Please note that speed control is not available in lowering operation.
Note 4: The remote operation distance of the P Type controller means the length of the conductor connecting the controller and the motor when the power line (pin Nos. ①, ②, and ⑧) and the signal line (pin Nos.③, ④, ⑤, ⑥, and ⑦) are separately connected.
Note 5: The motor shaft speed is set to the maximum level of 1400 r/min (U Type: the volume of the speed controller is set to the HIGH position, P Type: the volume of the external speed setting device is set to the 100 position) by the factory before shipment. To change the speed change range, adjust the knob of the internal speed setting device (trimmer resistor).
In the case of a U Type controller, remove the capacitor on the back side. (Refer to page 632.)
Note 6: Please note that if you purchase only a controller for repairs etc., it may be necessary to set the maximum speed. Be sure to use the controller at a motor shaft speed of 1400 r/min or below (50 Hz) or 1700 r/min or below (60 Hz).

U Type

■ SCU-100/SCU-200

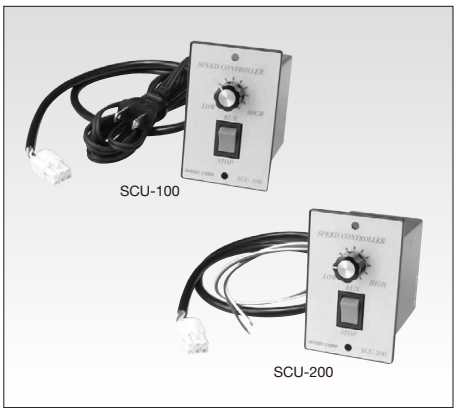

■ Function

- Only variable speed function
- Separate type/*Connect with a lead wire with a connector.
  *AV plug with a cord attached (however, 100 V only)
- For 1-Phase 100 V and 200 V
- Motor power/15 W to 90 W
- The controller contains a speed control circuit, a capacitor, a speed setting device, and all other necessary items. However, please note that if you purchase only a controller for repairs, a capacitor is not included.

*The controller is provided with a 600 mm lead wire with a connector. However, if you want to use it at a farther distance from the speed control gearmotor, use an optional extension cord with a connector. It can be used up to 5 m away from the gearmotor.
Four types of extension cords, 1 m, 2 m, 3 m, and 4 m, are available. (Refer to the options on page 640.)

■ Connection method

1. Connect the motor and the connector of the controller, and connect the AC plug with a cord (200 V: lead wire) to the power supply.
2. Before connecting the power supply, set the RUN/STOP switch to STOP.
3. To switch the rotational direction, connect the orange lead wire of the capacitor to the unused terminal. (Before performing this operation, be sure to turn off the power.)
4. Do not run and stop the controller by turning on and off the switch of the power supply. This may damage the controller in some cases.

● Outline Drawings

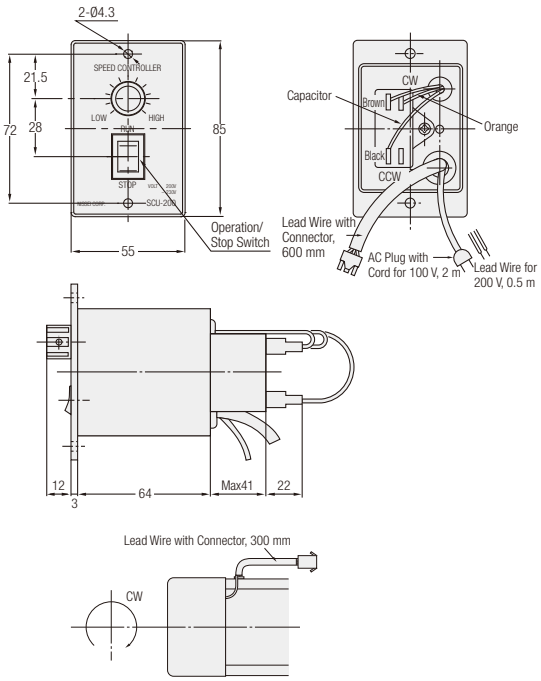

● Panel machining drawing

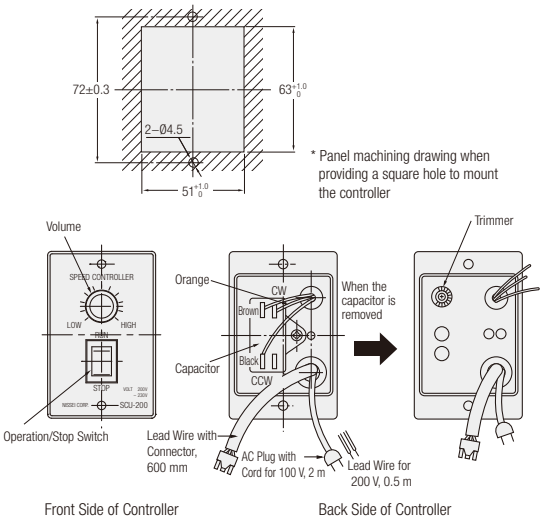

P Type

■ SCP-101L/SCP-201L

* The photo shows SCP-101L.

■ Function

- With variable speed and instant stop functions
- Completely separate type
- The motor speed can be adjusted with the built-in speed setting device or the speed setting volume on the front side of the controller.
- Eight-pin plug-in type
- For Single-phase 100 V and 200 V
- Motor power: 15 W to 90 W
- Instant stops are possible via electronic brake.
- External speed setting device (OP-RV24B20K) attached

● Outline Drawings

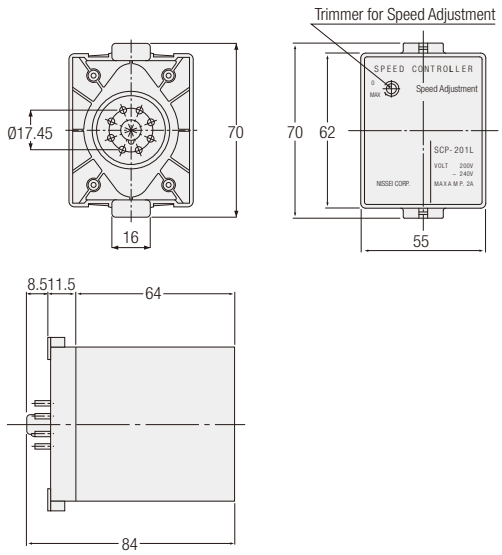

■ SCP-102L/SCP-202L

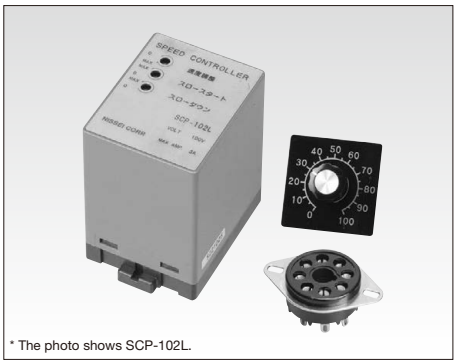

* The photo shows SCP-102L.

■ Function

- With variable speed, instant stop, and slow start/slow down functions
- Completely separate type
- The motor speed can be adjusted with the built-in speed setting device or the speed setting volume on the front side of the controller.
- Eight-pin plug-in type
- For Single-phase 100 V and 200 V
- Motor power: 15 W to 90 W

● Outline Drawings

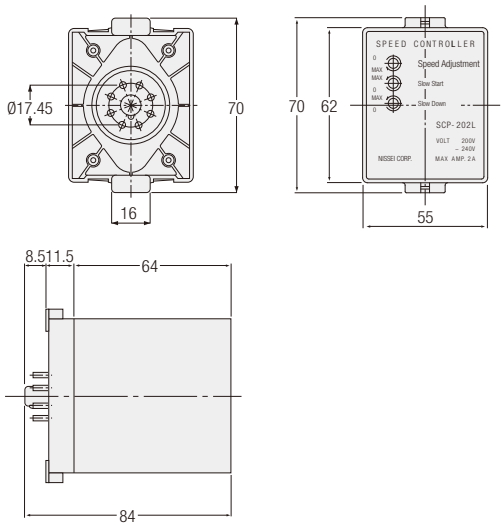

- Instant stops are possible via electronic brake.
- External speed setting device (OP-RV24B20K) attached
- Slow starts and slowdowns are possible. (The speed linearly changes with respect to time. Range of 0.5 to 10 seconds/1000 r/min)

■ SCP-103L/SCP-203L

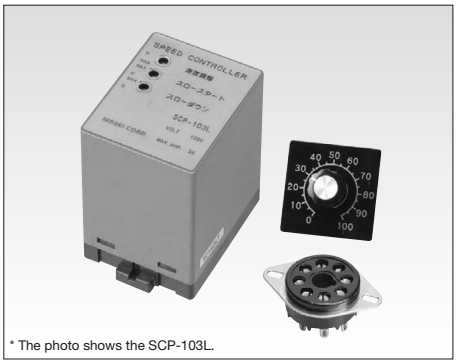

* The photo shows the SCP-103L.

■ Function

- With variable speed, instant stop, slow start/slow down, and parallel operation functions
- Completely separate type
- The motor speed can be adjusted with the built-in speed setting device or the speed setting volume on the front side of the controller.
- Eight-pin plug-in type
- For Single-phase 100 V and 200 V
- Motor power: 15 W to 90 W

● Outline Drawings

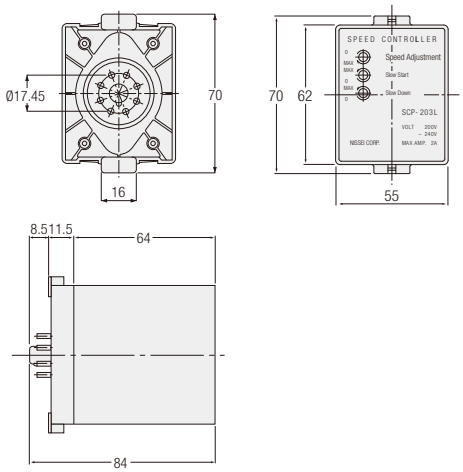

- Instant stops are possible via electronic brake.
- External speed setting device (OP-RV24B20K) attached
- Slow starts and slowdowns are possible. (The speed linearly changes with respect to time. Range of 0.5 to 10 seconds/1000 r/min)
- Parallel operation can be performed.

P Type standard accessories

● External speed setting device

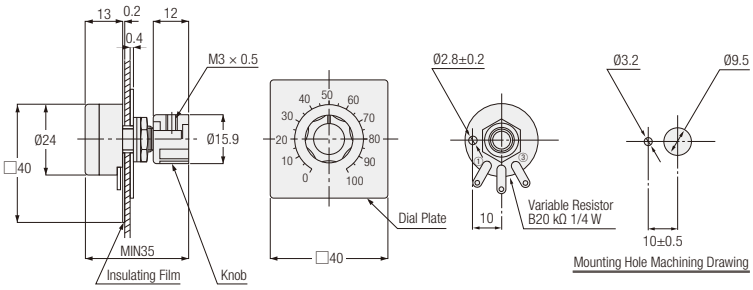

● Back side connection socket

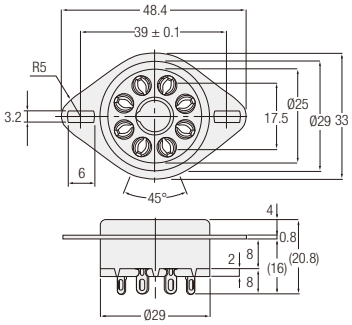

Wiring Diagram

■ Unidirectional operation, speed change, slow start/slow down

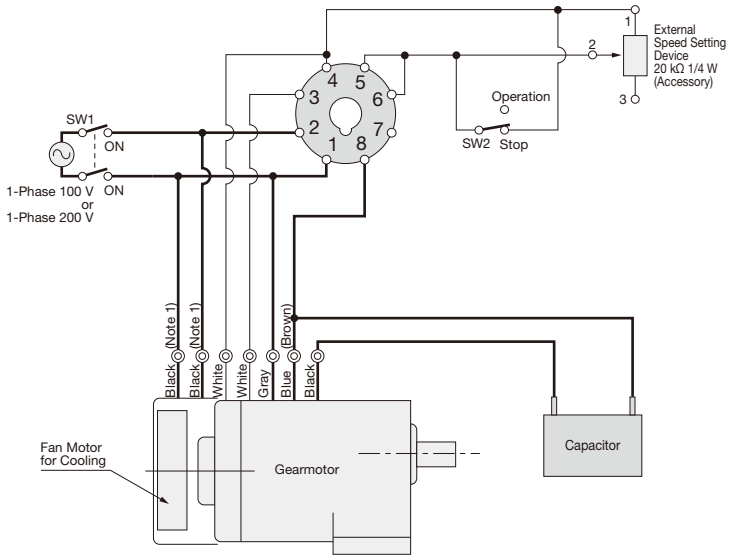

Function	Unidirectional operation, speed change	
	——	Slow Start Slow Down
Motor Power	15 W to 90 W	15 W to 90 W
Applicable model	SCP-101L	SCP-102L SCP-103L
	SCP-201L	SCP-202L SCP-203L

	Power	Remarks
SW1	125 VAC/5 A or more 250 VAC/5 A or more	Power switch
SW2	20 VDC 10 mA	Operation/Stop

Note 1: The fan motor lead wire is attached only to a gearmotor with a motor power of 60 W or 90 W.
Note 2: (Brown) means 200 V.
Note 3: The slow start/slow down function becomes enabled when SW2 is turned on and off.
Note 4: Do not start and stop the controller by operating SW1. This may damage the controller in some cases.

● Rotational Direction

To change the rotational direction, switch between “Blue (Brown)” and “Black.”

- When changing the speed with the controller without using the external speed setting device, remove the external speed setting device in the circuit, and run and stop the gearmotor with SW2.

■ CW/CCW run, speed change, slow start/slow down

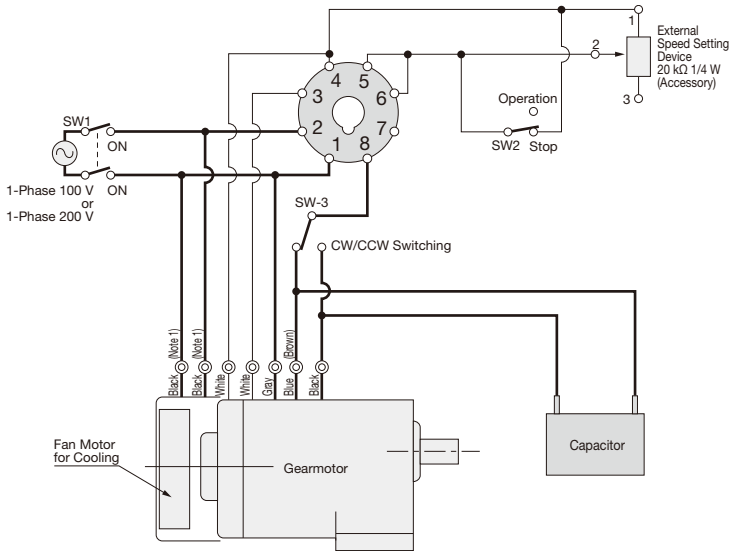

Function	CW/CCW run, speed change	
	——	Slow Start Slow Down
Motor Power	15 W to 90 W	15 W to 90 W
Applicable model	SCP-101L	SCP-102L SCP-103L
	SCP-201L	SCP-202L SCP-203L

	Power	Remarks
SW1	125 VAC/5 A or more 250 VAC/5 A or more	Power switch
SW2	20 VDC 10 mA	Operation/Stop
SW3	125 VAC/5 A or more 250 VAC/5 A or more	CW/CCW Operation

Note 1: The fan motor lead wire is attached only to a gearmotor with a motor power of 60 W or 90 W.
Note 2: (Brown) means 200 V.
Note 3: The slow start/slow down function becomes enabled when SW2 is turned on and off.
Note 4: Do not start and stop the controller by operating SW1. This may damage the controller in some cases.

● Rotational Direction

Before switching the rotational direction (SW3), be sure to stop the motor.

- When changing the speed with the controller without using the external speed setting device, remove the external speed setting device in the circuit, and run and stop the gearmotor with SW2.

■ Unidirectional operation, speed change, instant stop, slow start/slow down (15 W to 25 W)

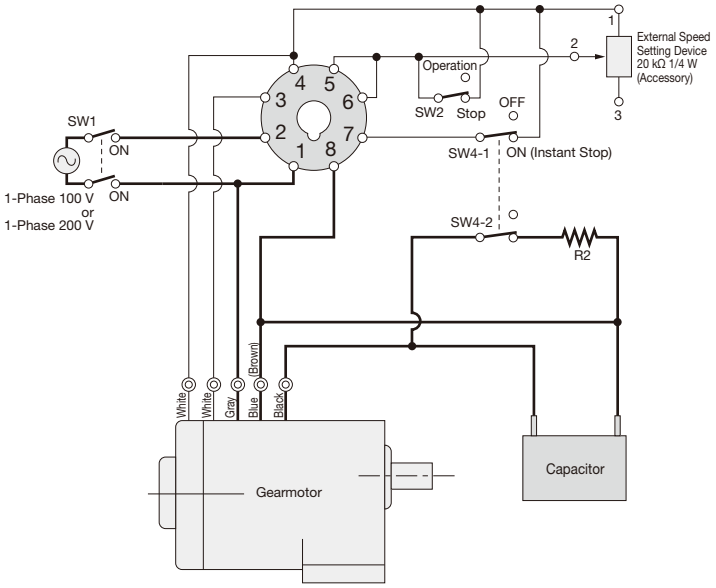

Function	Unidirectional operation, speed change	
	Instant stop	
	——	Slow Start Slow Down
Motor Power	15 W to 25 W	15 W to 25 W
Applicable model	SCP-101L	SCP-102L SCP-103L
	SCP-201L	SCP-202L SCP-203L

	Power	Remarks
SW1	125 VAC/5 A or more 250 VAC/5 A or more	Power switch
SW2	20 VDC 10 mA	Operation/Stop
SW4-1	20 VDC 10 mA	For instant stop The switches shall be operated in synchronization with each other.
SW4-2	125 VAC/5 A or more 250 VAC/5 A or more	
R2	10 Ω·10 W	Option (OP-TRH10)

Note 1: (Brown) means 200 V.
Note 2: The slow start/slow down function becomes enabled when SW2 is turned on and off.
Note 3: To protect the contact SW4-2, use a CR method (resistance: 120 Ω, capacitor: 0.1 μF/500 V).
Note 4: Do not start and stop the controller by operating SW1. This may damage the controller in some cases.

● Rotational Direction

To change the rotational direction, switch between "Blue (Brown)" and "Black."

- When changing the speed with the controller without using the external speed setting device, remove the external speed setting device in the circuit, and run and stop the gearmotor with SW2.

■ Unidirectional operation, speed change, instant stop, slow start/slow down (40 W to 90 W)

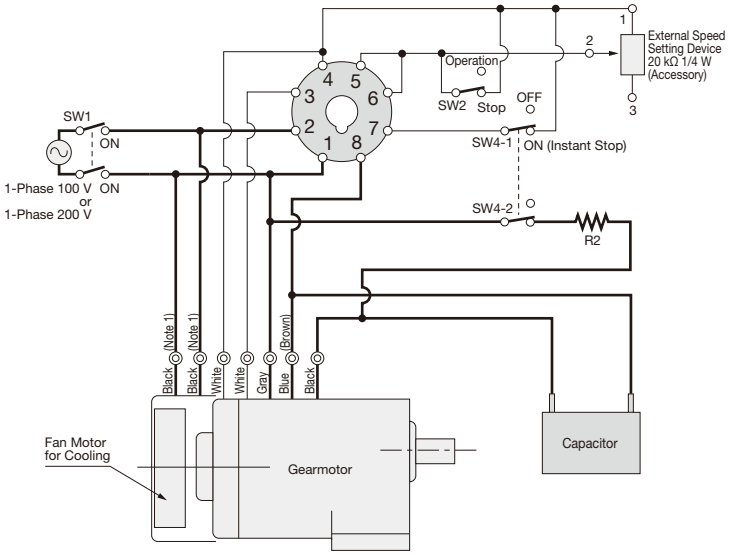

Function	Unidirectional operation, speed change	
	Instant stop	
	——	Slow Start Slow Down
Motor Power	40 W to 90 W	40 W to 90 W
Applicable model	SCP-101L	SCP-102L SCP-103L
	SCP-201L	SCP-202L SCP-203L

	Power	Remarks
SW1	125 VAC/5 A or more 250 VAC/5 A or more	Power switch
SW2	20 VDC 10 mA	Operation/Stop
SW4-1	20 VDC 10 mA	For instant stop The switches shall be operated in synchronization with each other.
SW4-2	125 VAC/5 A or more 250 VAC/5 A or more	
R2	10 Ω·10 W	Option (OP-TRH10)

Note 1: The fan motor lead wire is attached only to a gearmotor with a motor power of 60 W or 90 W.
Note 2: (Brown) means 200 V.
Note 3: The slow start/slow down function becomes enabled when SW2 is turned on and off.
Note 4: To protect the contact SW4-2, use a CR method (resistance: 120 Ω, capacitor: 0.1 μF/500 V).
Note 5: Do not start and stop the controller by operating SW1. This may damage the controller in some cases.

● Rotational Direction

To change the rotational direction, switch between "Blue (Brown)" and "Black."

- When changing the speed with the controller without using the external speed setting device, remove the external speed setting device in the circuit, and run and stop the gearmotor with SW2.

■ CW/CCW operation, speed change, instant stop, slow start/slow down (15 W to 25 W)

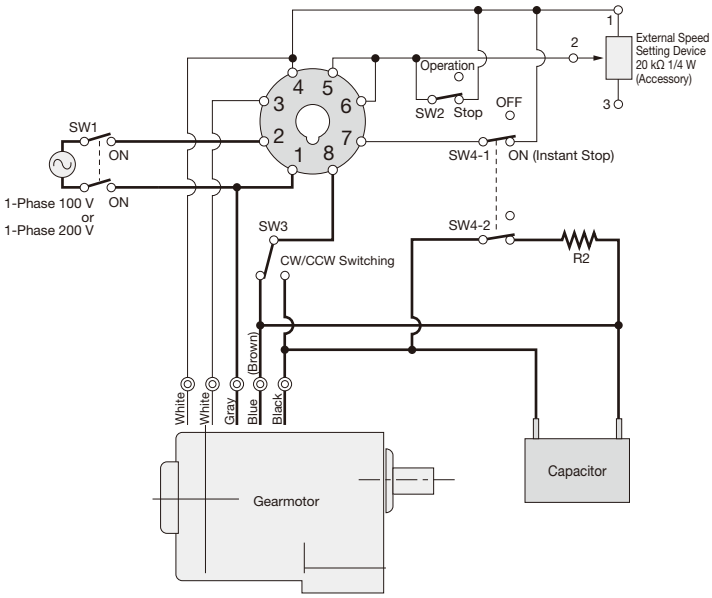

Function	CW/CCW run, speed change	
	Instant stop	
	——	Slow Start Slow Down
Motor Power	15 W to 25 W	15 W to 25 W
Applicable model	SCP-101L	SCP-102L SCP-103L
	SCP-201L	SCP-202L SCP-203L

	Power	Remarks
SW1	125 VAC/5 A or more 250 VAC/5 A or more	Power switch
SW2	20 VDC 10 mA	Operation/Stop
SW3	125 VAC/5 A or more 250 VAC/5 A or more	CW/CCW Operation
SW4-1	20 VDC 10 mA	For instant stop The switches shall be operated in synchronization with each other.
SW4-2	125 VAC/5 A or more 250 VAC/5 A or more	
R2	10 Ω·10 W	Option (OP-TRH10)

Note 1: (Brown) means 200 V.
Note 2: The slow start/slow down function becomes enabled when SW2 is turned on and off.
Note 3: To protect the contact SW4-2, use a CR method (resistance: 120 Ω, capacitor: 0.1 μF/500 V).
Note 4: Do not start and stop the controller by operating SW1. This may damage the controller in some cases.

● Rotational Direction

Before switching the rotational direction (SW3), be sure to stop the motor.

- When changing the speed with the controller without using the external speed setting device, remove the external speed setting device in the circuit, and run and stop the gearmotor with SW2.

■ CW/CCW operation, speed change, instant stop, slow start/slow down (40 W to 90 W)

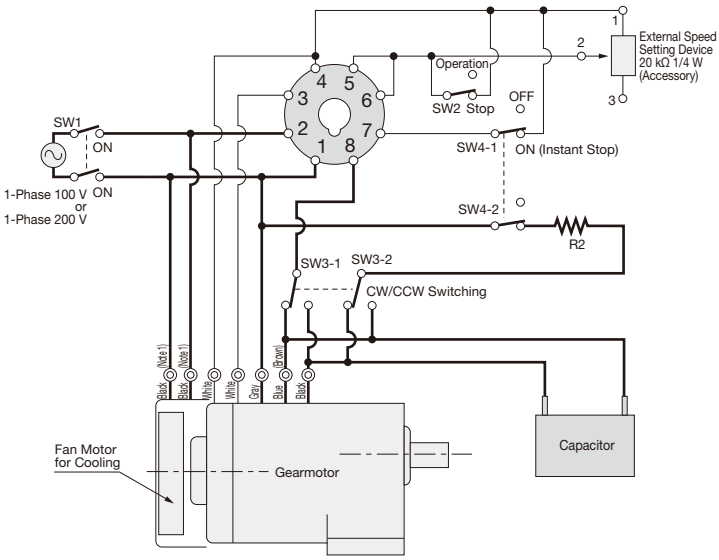

Function	CW/CCW run, speed change	
	Instant stop	
	——	Slow Start Slow Down
Motor Power	40 W to 90 W	40 W to 90 W
Applicable model	SCP-101L	SCP-102L SCP-103L
	SCP-201L	SCP-202L SCP-203L

	Power	Remarks
SW1	125 VAC/5 A or more 250 VAC/5 A or more	Power switch
SW2	20 VDC 10 mA	Operation/Stop
SW3-1	125 VAC/5 A or more 250 VAC/5 A or more	CW/CCW Operation The switches shall be operated in synchronization with each other.
SW3-2	125 VAC/5 A or more 250 VAC/5 A or more	
SW4-1	20 VDC 10 mA	For instant stop The switches shall be operated in synchronization with each other.
SW4-2	125 VAC/5 A or more 250 VAC/5 A or more	
R2	10 Ω·10 W	Option (OP-TRH10)

Note 1: The fan motor lead wire is attached only to a gearmotor with a motor power of 60 W or 90 W.
Note 2: (Brown) means 200 V.
Note 3: The slow start/slow down function becomes enabled when SW2 is turned on and off.
Note 4: To protect the contact SW4-2, use a CR method (resistance: 120 Ω, capacitor: 0.1 μF/500 V).
Note 5: Do not start and stop the controller by operating SW1. This may damage the controller in some cases.

● Rotational Direction

Before switching the rotational direction (SW3), be sure to stop the motor.

- When changing the speed with the controller without using the external speed setting device, remove the external speed setting device in the circuit, and run and stop the gearmotor with SW2.

■ Parallel operation

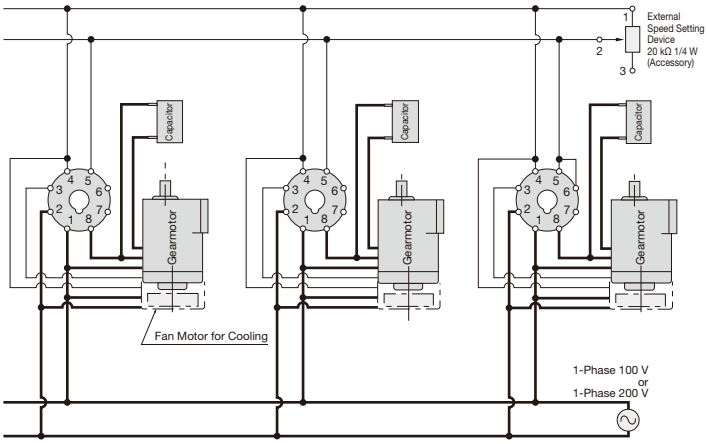

Note 1: Short terminals 5 and 6 on any one of the controllers.

Function	Unidirectional operation, speed change
	Slow start/Slow down
	Parallel operation
Motor Power	15 W to 90 W
Applicable model	SCP-103L
	SCP-203L

Note 1: The dashed line indicates a 60 W or 90 W gearmotor.

■ Changing the speed by the external DC voltage

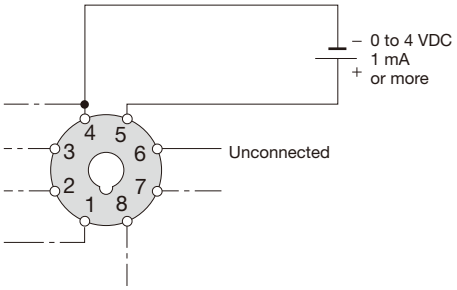

Note 1: Do not connect the DC power supply with incorrect polarity.
Note 2: The connections indicated by the dotted line are based on "Wiring diagrams ① to ⑦."
However, do not connect anything to pin ⑥.
Note 3: Be sure to insulate the output of the DC power supply from the AC input.

Precautions for Connection

■ Countermeasures against noise

The gearmotor does not malfunction due to incoming noise under regular usage conditions.
However, the control of the gearmotor occasionally becomes unstable near high-voltage equipment or in a place where high electric power is frequently turned on and off. As a countermeasure against incoming noise, connecting a noise filter is very effective.
In addition, phase control by a TRIAC may cause radio noise interference. Also in this case, it is recommended to connect a noise filter.

● Connection diagram

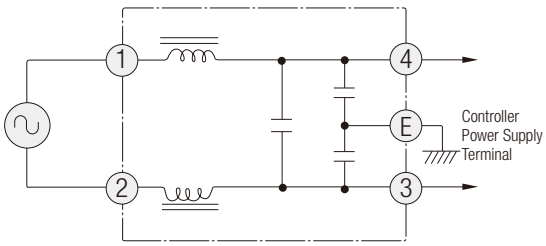

■ Capacitor

A capacitor is indispensable for the operation of a speed control gearmotor. Upon use, please connect the included capacitor to the product.
All Single-phase motors are connected by a reversible connection (three lead wires) and can therefore run in the CW and CCW directions as Three-phase motors do.
For the capacity of the capacitor, refer to the performance table.
For the shape and dimensions of the capacitor, refer to page 546.

Terminal Box (Option)

The P Type speed control gearmotor can be equipped with a terminal box. If you need one, please inform us when placing an order.

■ Types and structures (limited to P Type)

● For the connection method of C Type terminal boxes, refer to the table shown below.

1-Phase 100 V and 200 V (15 W to 40 W)

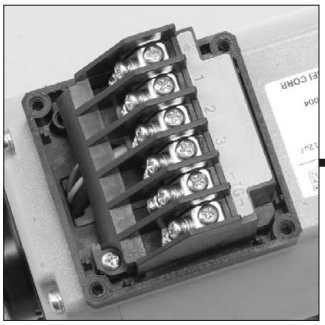

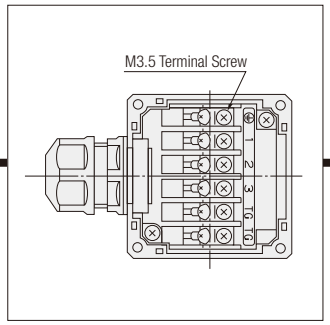

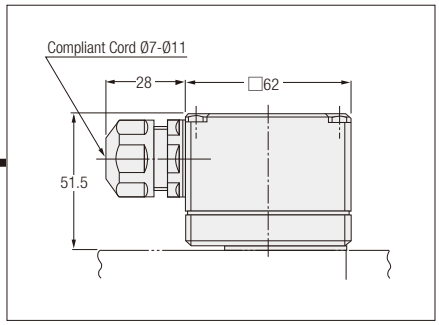

● For the connection method of C Type terminal boxes, refer to the table shown below.

1-Phase 100 V and 200 V (60 W, 90 W)

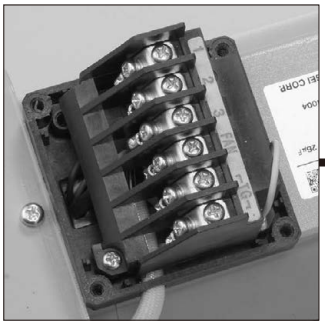

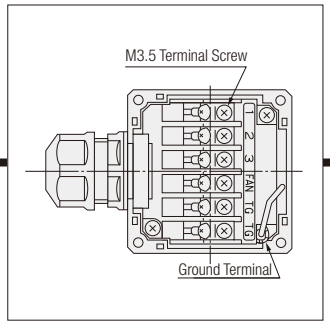

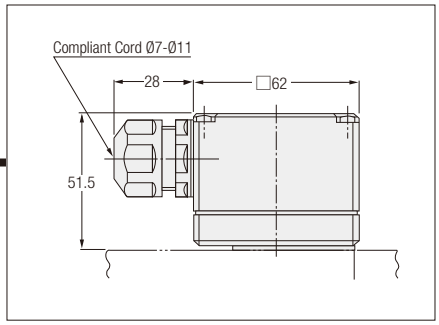

Note: The forced fan lead wire is drawn in from outside the terminal box and connected to a terminal.

● Method of connecting the wires of a gearmotor with a C Type terminal box

Refer to the table shown below as well as the wiring diagram on pages 635 to 638.

Terminal Code	Connection Method	Remarks
⏚	Grounding	(Note 1)
1	Same as blue (brown) in the wiring diagram	
2	Same as black in the wiring diagram	
3	Same as gray in the wiring diagram	
FAN	Connect to pin No. 2 of the controller.	Only 60 W or 90 W gearmotor
TG	Same as white in the wiring diagram	

Note 1: In the case of a 60 W or 90 W gearmotor, connect this terminal to the green lead wire on the back side of the terminal block.

Speed Control Gearmotors Options

■ Extension cord with connector

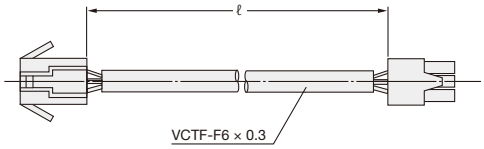

Product Name	ℓ (m)
OP-C1	1
OP-C2	2
OP-C3	3
OP-C4	4

- Use the cord for the extension of the U Type cord.
- Connect a lead wire not longer than 5m between the controller and the gearmotor.

■ External resistor for instant stop/OP-TRH10

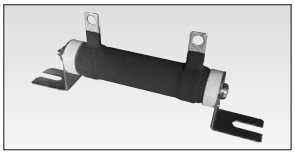

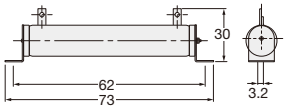

- Use this resistor when using the instant stop function.

■ Front side connection socket/OP-8PFA

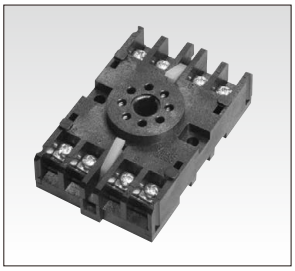

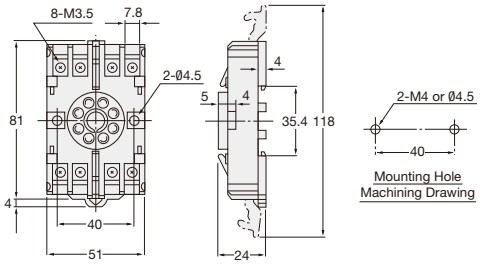

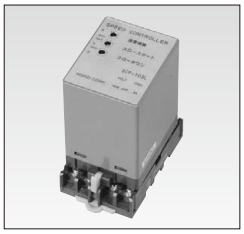

When a front side connection socket is attached (photo: SCP-103L)

■ External speed setting device/OP-RV-24B20K

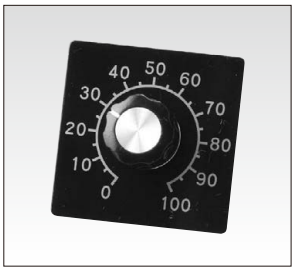

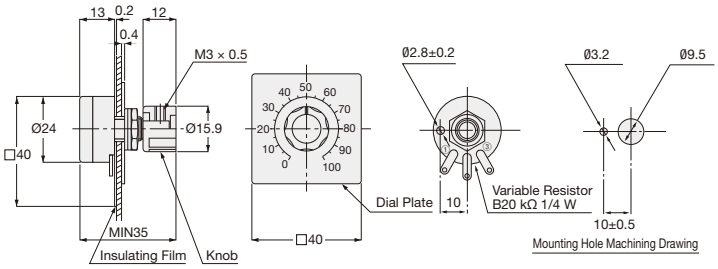

- This device (one set) is attached to the P Type controller as a standard item, and use it for multistep speed changes.

Thermal Protector (Optional)

A thermal protector can be attached to prevent the motor from burning.
However, please note that a thermal protector cannot be installed to the listed models below.

Type	Frame Size	Motor Power
G	12	3-phase: 40 W, 60 W 1-phase: 40 W, 60 W
	22	
H	15	
	22	
F2 (F2S)	12	
F2 (F2F)	15	

All thermal protectors are of a signal wire extraction type.
For built-in types, please contact us.

● Example of use of a thermal protector (3-phase induction motor)

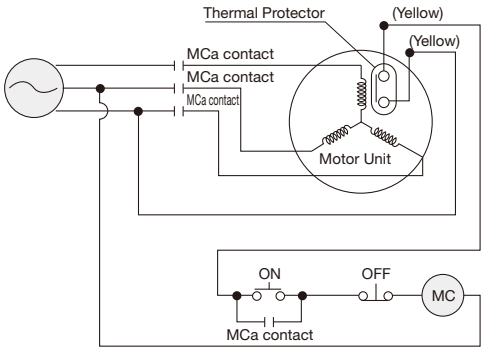

(MC) : Relay Coil
MCa : Electro Magnetic Contactor a Contact

Note The ON-OFF switch is to turn on and off the motor. When the temperature of the motor rises, the contacts of the thermal protector will open, and the power supply will be turned off through the (MC). When the temperature of the motor lowers, the contacts of the thermal protector will automatically close again, but this wiring example will not permit the motor to run unless the ON pushbutton is pressed.

For more information, please contact your nearest Sales Office or the CS Center.

Precautions for Use

■ Before using our products, carefully read the Detailed Instruction Manual.

Installation Location

	Standard Specification	Water-resistant Specification
Ingress Protection Rating	Differs depending on the model.	IP65
Ambient temperature	-10 °C to 40 °C	-10 °C to 40 °C
Ambient Humidity	85 % max (No condensation)	100 % max (No condensation)
Altitude	1,000 m max	1,000 m max
Installation Environment	A well ventilated place free from corrosive gas, explosive, vapor, and/or chemicals. Not to be exposed to direct rain. Not to be exposed to direct sunlight. The brake should not be exposed to water, powders, oil/greases, or oil mist. Models with water protection rating IPX0 shall not be exposed directly to water.	A place free from corrosive gas, explosive gas, and/or vapor. Not to be exposed to direct strong rain, and winds. Not to be exposed to direct sunlight. Not to be used underwater, environments with exposure to high pressure water splashes, and exposure to cleansing chemicals.

Note 1: The ambient temperature for capacitor run type Single-phase motors is -10 °C to 0 °C.

Installation Surface

Fasten the gearmotor to a vibration-free, machined, flat surface using four bolts. For the installation of a right angle hollow bore type on a shaft, refer to pages 997 to 1000.

Installation Orientation

All models adopt a grease lubrication method and can therefore be installed in any orientation.

Connection with Application

1. H_7 fit is recommended for a hole for a coupling, sprocket, pulley, gear, etc. to be attached to the gearbox shaft.
2. In direct coupling, accurately align the center of the gearbox shaft and that of the mating shaft.
3. In chain, belt, or gear engagement, keep the gearbox shaft and the mating shaft parallel accurately to each other, and install the device so that the line connecting the centers of both gears is perpendicular to the shafts.
4. When attaching a coupling or application to the output shaft, do not apply strong impacts via hammer or similar tool. The bearing may get damaged and cause an abnormal sound, vibrations, or damage.

Precautions for Operation

1. Be sure to operate the motor with the load torque, the load moment of inertia J, and the O.H.L. kept within the allowable values.
2. CW and CCW rotations by plucking adversely affects the gearmotor and the application. To prevent it, temporarily stop the gearmotor, and then start it in the reverse direction.
3. Do not touch the gearmotor during energization and for a while after the power supply is turned off, because it is hot. You may suffer burns or injuries.
4. When running a Single-phase motor in the reverse direction, be sure to stop the motor and then start it in the reverse rotation. Failure to follow this precaution may put the gearmotor out of control because the rotational direction remains unchanged.
5. Do not perform an impact stop to the Single-phase motor. Failure to follow this precaution may cause the motor to run in the reverse rotational direction and go out of control.
6. Take care to keep the surface temperature of the MINI Series motor and gearbox below 90 °C.
7. Take care to keep the surface temperature of the MID Series motor below the value calculated by adding the temperature rise value shown in the table below to the ambient temperature.

Motor Power [kW]	Temperature Rise [°CUP]	Ambient temperature At 25°C [°C]
0.1	50	75
0.2	70	95
0.4	60	85
0.75	40	65
1.5	40	65
2.2	40	65

Note 1: The ambient temperature is -10 °C to 40 °C.
Note 2: The temperature rise is the value under a 100 % load.
If you are concerned about a temperature rise, please contact your nearest Sales Office or the CS Center.

Rated Currents

The rated current values shown in the motor specifications on pages 622 to 625 are the rated current values of motors alone. With regard to gearmotors with a brake, it is necessary to consider the current value flowing through the brake as needed. For more details, please contact your nearest Sales Office or the CS Center.

Lubrication

All models utilize grease lubrication and are shipped from our factory with specified amounts of high-grade grease sealed. The grease used is a grease containing an extreme pressure additive equivalent to Class NLGI-0 or Class 0.

When using an inverter (frequency conversion device) to convert the speed of the GTR gearmotors

①Please note that when the gearmotor is used in combination with an inverter and runs at low speed, it may cause an unusual temperature rise. Moreover, a gearmotor with a brake may malfunction due to a voltage fluctuation. To prevent this, wire the brake by bypassing the inverter.
For more information, refer to Combination of Gearmotor and Inverter/VFD on page 591.

②Electric erosion of bearing due to inverter operation.
When a gearmotor is driven in combination with an inverter, the bearing causes electric erosion, although very rare, depending on the state of the grease sealed in the bearing, the wiring method, the operating conditions, etc.
Please consult us if you require advice on potential solutions.

Attaching and detaching the F2 Type safety cap

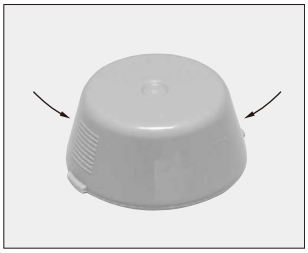

Attach and detach the safety cap by lightly pushing the portion indicated by the arrow. (Do not strongly push it.)

MID Series 1-Phase Capacitor Run Type

1-phase capacitor run type motors have built-in thermal protectors.A thermal protector can be installed on a capacitor run type motor. If the motor reaches the specified temperature, the thermal protector will be activated to stop the motor. (Operating temperature of a built-in thermal protector: 120 ±5{1>°C<1}) In such a case, only motors with a brake will stop and will not retain the load because the brake remains released.
Failure to follow this precaution may result in injury or damage to the device.
The built-in thermal protector is an automatic restoration type; the motor will automatically restart as it cools down. Be sure to turn off the power before inspection/ maintenance work. Failure to follow this precaution may result in injury due to sudden start of the motor.
In addition, do not energize the brake coil continuously when the motor is inactive.

Precautions about the attachment of a motor to an S-Type gearboxes

1. Wipe rust, dust, rust preventive oil, etc. clean off the motor shaft.
2. When inserting the motor, do not hit the motor unit or the gearbox unit, or utilize the clamping force of the bolts. If the motor is forcedly inserted, the excessive load may be applied to the motor shaft, and this may result in damaged bearing or an unusual sound, etc.
3. No input pinion key material is attached to the S-Type gearbox. Thus, use the motor-side key material. However, a key material is included with 0.1 kW and 0.2 kW motors.
   The included key is designed for transition fit.
   Beware of the dropping of the key when installing the motor.
4. If the mass (weight) of the motor to be attached to the S-Type gearbox is heavy, it may impose an excessive burden on the installation flange, resulting in a problem. Use the table shown below as a guideline.

Note 1: If a motor exceeding the moment limitation is installed, the case and other parts may get damaged, and the motor may drop.
Note 2: Failures attributable to the installation of a motor exceeding the moment limitation are excluded from the coverage of our warranty.

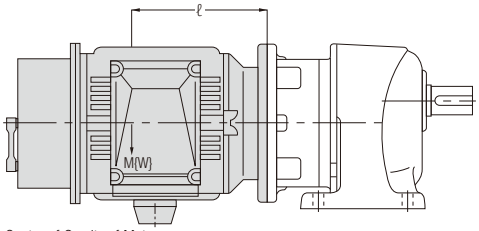

ℓ: Center of Gravity of Motor
M: Motor Weight
{W: Motor Weight}

Power Class 4 poles Motor	Moment Limitation ℓ × M
0.1, 0.2 kW	27 N·m or less
0.4 kW	31 N·m or less
0.75 kW	34 N·m or less
1.5 kW	83 N·m or less
2.2 kW	93 N·m or less

MEMO

Option

INDUCTION GEAR MOTOR

P.646 Torque Arm
P.648 R Flange
P.649 Surge Suppressors for Brake Wiring
P.649 Thermal Protector
P.650 Option Codes
P.651 Motor Shaft Extension
P.652 Encoders
P.654 Forced Fan
P.655 Cable Glands
P.655 Output Shaft Tapping (Threading)
P.656 Output Shaft Hole Diameter Custom Specifications

Option

Torque Arm

MINI Series

■ F2S Type

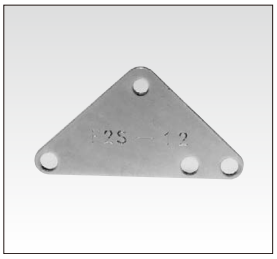

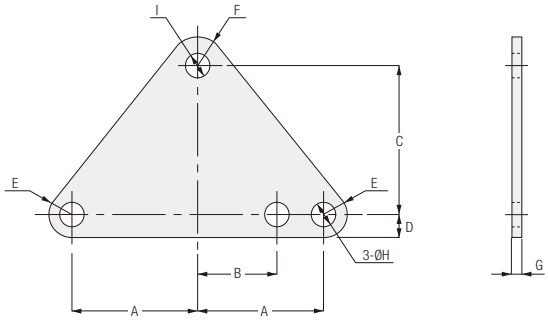

Part No.	Applicable Frame Size	A	B	C	D	E	F	G	H	I	Weight (g)
TAF2S-12	12	43	24	37.5	7	R7	R9	3.2	8.4	Ø7	75
TAF2S-15	15	48	30	56.5	9	R9	R11	3.2	10.5	Ø9	125

● Torque Arm Specifications

Material	Surface Treatment	Color
SS400	Trivalent Chromate	White

MID Series

■ FS/FAS Type

<Figure-1>

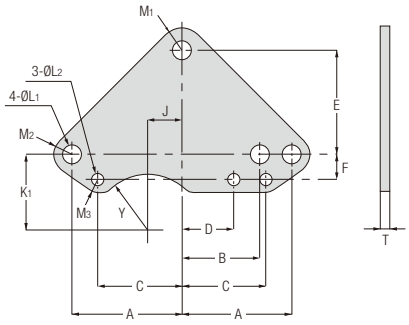

<Figure-2>

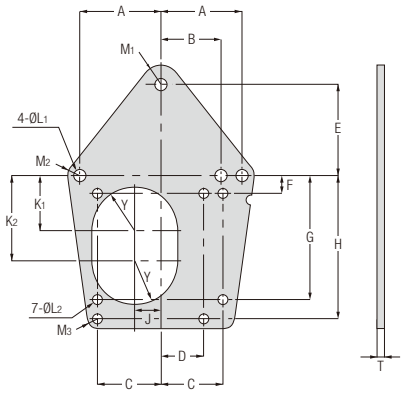

Part No.	Applicable Frame Size	Figure	A	B	C	D	E	F	G	H	J	K_1	K_2	L_1	L_2	M_1	M_2	M_3	Y	T	Weight (kg)
TA-25	25	1	63	47	47	31	61	16	—	—	19	44	—	11	6.5	R15	R10.5	R7	R34	4.5	0.3
TA-30	30	1	70	52	53	35	70	17	—	—	20	50	—	11	9	R15	R12	R9	R39	6	0.5
TA-35	35	2	82	62	64	44	94	18	126	146	26	56	88	13	9	R18	R12	R10	R43.5	6	1.2
TA-45	45	2	102	72	80	50	110	22	152	182	32	70	104	15	11	R20	R15	R11	R51	9	3.0
TA-55	55	2	129	93	97	61	160	32	190	226	39	90	132	18	13	R25	R20	R13	R70	9	4.8

● Torque Arm Specifications

Material	Surface Treatment	Color
SS400	Trivalent Chromate	White

■ F3S Type

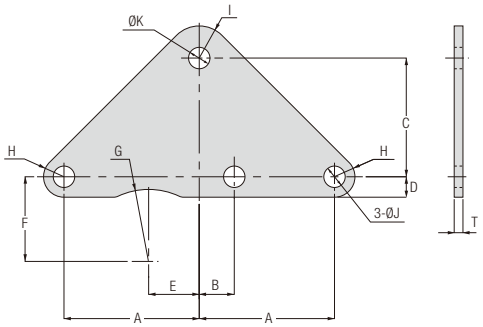

Part No.	Applicable Frame Size	Power	Applicable Reduction Ratio	A	B	C	D	E	F	G	H	I	J	K	T	Weight (kg)
TAF3S-20-2	20	0.2 kW	1/5 to 1/30	53.5	23.5	52	10.5	—	—	—	R10.5	R11	11	9	3.2	0.1
		0.1 kW	1/5 to 1/60													
TAF3S-25-2	25	0.4 kW	1/5 to 1/30	60	27	61	10.5	16.5	43.5	R37	R10.5	R15	11	9	3.2	0.2
		0.2 kW	1/5 to 1/60													
TAF3S-25-3		0.1 kW	1/80 to 1/240	69.5	17.5	61	10.5	26	43.5	R37	R10.5	R16.5	11	11	4.5	0.2
TAF3S-30-2	30	0.75 kW	1/5 to 1/30	69.5	26.5	70	10.5	21.5	48	R41.5	R10.5	R15	11	11	4.5	0.3
		0.4 kW	1/5 to 1/60													
TAF3S-30-3		0.2 kW	1/80 to 1/240	78	14	70	12	32	46	R41.5	R12	R16.5	13.5	13.5	6	0.4
TAF3S-35-2	35	1.5 kW	1/5 to 1/30	80.5	31.5	94	12	24.5	56	R46.5	R12	R18	13.5	13.5	6	0.6
		0.75 kW	1/5 to 1/60													
TAF3S-35-3		0.4 kW	1/80 to 1/240	97	11	94	15	43	54	R46.5	R15	R22.5	17.5	17.5	9	1.2
TAF3S-45-2	45	1.5 kW	1/5 to 1/60	103.5	42.5	110	15	—	—	—	R15	R20	17.5	17.5	9	1.4
		2.2 kW	1/5 to 1/30													
TAF3S-45-3		0.75 kW	1/80 to 1/240	118	20	110	18.5	49	69	R54	R18.5	R28.5	22	22	9	1.7

● Torque Arm Specifications

Material	Surface Treatment	Color
SS400	Trivalent Chromate	White

R Flange

Induction Gearmotors

■ FS/FAS Type (Right Angle Hollow Bore)

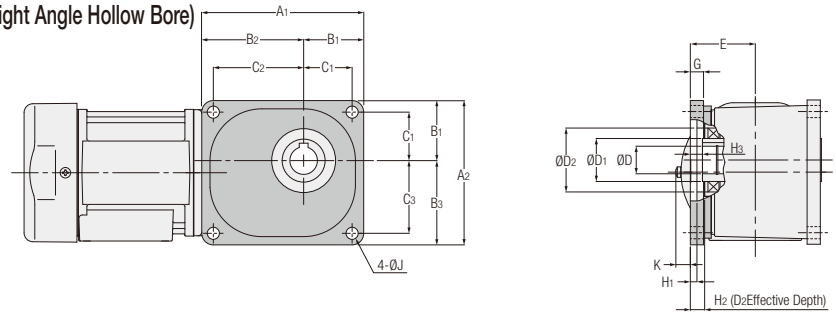

Part No.	Applicable Frame Size	A_1	A_2	B_1	B_2	B_3	C_1	C_2	C_3	E	G	H_1	H_2	H_3	D_2 (H8)	Output Shaft		J	K Note 1, Note 2
																D_1	D (H8)		
RF-25	25	147	131	54.5	92.5	76.5	44	82	66	59	12	6	12	11	58	39	25	11	13.5 (—)
RF-30	30	164	146	62	102	84	50	90	72	65	14	5	15	14	65	44	30	11	7.5 (7.5)
RF-35	35	188	168	68	120	100	56	108	88	70	16	3	18	17	72	49	35	13	2.5 (2.5)
RF-45	45	234	204	85	149	119	70	134	104	80	18	3	22	21	85	64	45	15	— (—)
RF-55	55	298	262	110	188	152	90	168	132	98	22	6	17	16	100	79	55	18	— (—)

Note1: The K dimension is the value for gearmotor with brake.
Note2: The value in brackets is the IP65 gearmotor value.
Note3: For 1-Phase cases, please contact your nearest Sales Office or the CS Center.

■ FF Type (Right Angle Shaft)

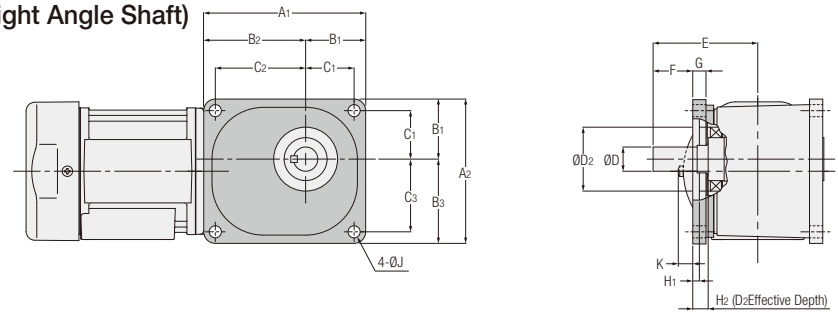

Part No.	Applicable Frame Size	A_1	A_2	B_1	B_2	B_3	C_1	C_2	C_3	E	G	H_1	H_2	D_2 (H8)	Output Shaft		J	K Note 1, Note 2
															F	D (h6)		
RF-25	22	147	131	54.5	92.5	76.5	44	82	66	95	12	6	12	58	36	22	11	13.5 (—)
RF-30	28	164	146	62	102	84	50	90	72	107	14	5	15	65	42	28	11	7.5 (7.5)
RF-35	32	188	168	68	120	100	56	108	88	124	16	3	18	72	54	32	13	— (—)
RF-45	40	234	204	85	149	119	70	134	104	144	18	3	22	85	64	40	15	— (—)

Note1: The K dimension is the value for gearmotor with brake.
Note2: The value in brackets is the IP65 gearmotor value.

● R Flange Specifications

Part No.	Applicable Frame Size	Weight (kg)	Material	Color
RF-25	25·22	0.5	Aluminum Casting	Gray
RF-30	30·28	0.5	Aluminum	
RF-35	35·32	1.0	Aluminum Casting	
RF-45	45·40	2.0		
RF-55	55	7.0	Cast Iron	

Surge Suppressors for Brake Wiring

■ For 200 V Class Motors with a Brake (OP-ERZV10D471)

● Use a surge suppressor for the contact of a brake DC switching connection to extinguish sparks.

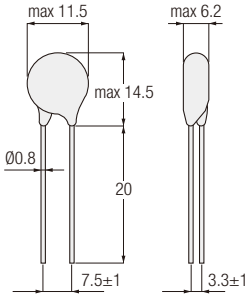

■ For 400 V Class Motors with a Brake (OP-ERZV10D911)

● Use a surge suppressor for the contact of a brake DC switching connection to extinguish sparks.

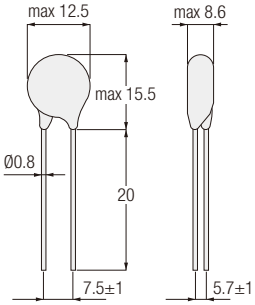

Thermal Protector (Optional)

A thermal protector can be attached to prevent the motor from burning.
However, please note that a thermal protector cannot be installed to the listed models below.

Type	Frame Size	Motor Power
G	12	3-phase: 40 W, 60 W 1-phase: 40 W, 60 W
	22	
H	15	
	22	
F2 (F2S)	12	
F2 (F2F)	15	

All thermal protectors are of a signal wire extraction type.
For built-in types, please contact us.

● Example of use of a thermal protector (3-phase induction motor)

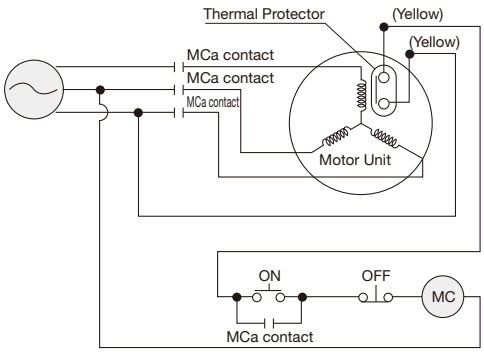

(MC) : Relay Coil
MCa : Electro Magnetic Contactor a Contact

Note The ON-OFF switch is to turn on and off the motor. When the temperature of the motor rises, the contacts of the thermal protector will open, and the power supply will be turned off through the (MC). When the temperature of the motor lowers, the contacts of the thermal protector will automatically close again, but this wiring example will not permit the motor to run unless the ON pushbutton is pressed.

For more information, please contact your nearest Sales Office or the CS Center.

Option Codes

We can deal with orders for specification changes and additional work as described below as options. Use options according to the usage of the product.
You can also select combinations of multiple options. For details, please refer to the table shown below.

Gearhead Type					–	Motor Type							Brake Specifications	Option	
Series	Mount	Frame Size	Shaft Arrangement	Reduction Ratio	–	Motor Type	Motor Specifications	Motor Power	Number of Phases	Supply Voltage	Standards	Terminal Box	Brake	Option	Option Code
G3	L	28	N	5	–	M	R	08	T	N	N	T	B2	X	AA
①	②	③	④	⑤		⑥	⑦	⑧	⑨	⑩	⑪	⑫	⑬	⑭	⑮

1. Add an “X” and a desired option code to the end of the model name when ordering.
2. If you order multiple options, they will be marked on the nameplate in the order shown in [Nameplate Notation Order] in the table below.
   [Example] If you have ordered AC switching A [AA], box position (top) [TZ], hole position (lower) [H6], encoder (100 P/R) [X0], the order of the option code following the option “X” of the model will be X0TZH6AA.
3. Available options differ depending on the model. For more information, please refer to the page detailing each option.
4. There are options that cannot be used in combination with others. For more information, please refer to the page detailing each option.

* For more information, please contact your nearest Sales Office or the CS Center.

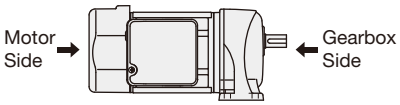

● List of Option Codes

page	Option Code	Description	Nameplate Notation Order
Motor rear special specifications	X6	The motor will be shipped with the rear-side motor shaft extended.	1
	X0	Shipped with an encoder (A/B/Z, 100P/R, line driver).	2
	X1	Shipped with an encoder (A/B/Z, 1024P/R, line driver).	
	X2	Shipped with an encoder (A/B/Z, 1024P/R, open collector).	2
	X7	The motor will be shipped with a forced fan attached.	3
Terminal Box	CC	The motor will be shipped together with a cable gland for T Type terminal box.	4
	T3	The position of the terminal box will be changed to the (right) when viewed from the motor side.	5
	T6	The position of the terminal box will be changed to the (bottom) when viewed from the motor side.	
	T9	The position of the terminal box will be changed to the (left) when viewed from the motor side.	
	TZ	The position of the terminal box will be changed to the (top) when viewed from the motor side.	
	H3	The hole direction of the terminal box will be changed to the gearhead side.	6
	H6	The hole direction of the terminal box will be changed to the (bottom). (Note 1)	
	HZ	The hole direction of the terminal box will be changed to the (top). (Note 1)	
Manual release lever	R1	The position of the manual release lever will be changed to the (lower right) when viewed from the motor side.	7
	R3	The position of the manual release lever will be changed to the (right) when viewed from the motor side.	
	R6	The position of the manual release lever will be changed to the (bottom) when viewed from the motor side.	
	R7	The position of the manual release lever will be changed to the (lower left) when viewed from the motor side.	
	R9	The position of the manual release lever will be changed to the (left) when viewed from the motor side.	
	RZ	The position of the manual release lever will be changed to the (top) when viewed from the motor side.	
Brake wiring for built-in rectifier	AB	The rectifier will be built in the terminal box, and the motor will be shipped with AC switching B connected.	8
	AA	The rectifier will be built in the terminal box, and the motor will be shipped with AC switching A connected.	
	DC	The rectifier will be built in the terminal box, and the motor will be shipped with DC switching connected.	
Output Shaft	40	The output shaft will be changed to an output shaft with shaft end tapping. (The G3 type standard specification and the water-resistant carbon steel output shaft are provided with shaft end tapping as a standard item.)	9
	F2	Changes the bore diameter of the right angle hollow bore from Ø25 to Ø20.	
	F3	Changes the bore diameter of the right angle hollow bore from Ø30 to Ø25.	
	F4	Changes the bore diameter of the right angle hollow bore from Ø35 to Ø30.	
	F5	Changes the bore diameter of the right angle hollow bore from Ø45 to Ø35.	
	F6	Changes the bore diameter of the right angle hollow bore from Ø45 to Ø40.	
	F7	Changes the bore diameter of the right angle hollow bore from Ø55 to Ø45.	
	F8	Changes the bore diameter of the right angle hollow bore from Ø55 to Ø50.	

Note 1: The gearbox side hole and the motor side hole will always be set in the positions “3” and “9,” respectively, regardless of the position of the terminal box.
Note 2: Option parts, such as torque arms and surge suppressors, are not assigned with option codes.

Motor Shaft Extension

The motor shaft can be extended from the rear end of the motor. If you require motor shaft extension, order it with the option code shown in the table below.
Since the rotary portion will be exposed during use, please take a measure to prevent any contact with it for safety. (Installing a cover, etc.)
For more details, please contact your nearest Sales Office or the CS Center.

■ Target Models

Induction Gearmotors
0.4 kW to 2.2 kW: No Brake/Brakemotor (except water-resistant IP65)

Option	Option Code
X	X6

Model example: Standard specification G3L28N30-MM04TNNTB2 ⇒ Motor shaft extension G3L28N30-MM04TNNTB2XX6

■ Motor Shaft Extension Specifications

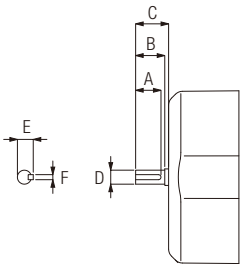

Motor Power	A	B	C	D	E	F
0.4 kW	20	23	26	Ø11h7	12.5	4
0.75 kW	20	23	25	Ø11h7	12.5	4
1.5 kW	27	30	33	Ø14h7	16	5
2.2 kW	27	30	33	Ø14h7	16	5

■ Product Outline Dimensions

When the shaft is extended, the overall length of the motor will increase For details, please refer to the table shown below.

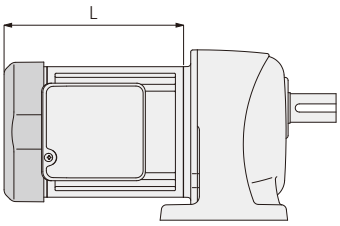

[Figure-1]

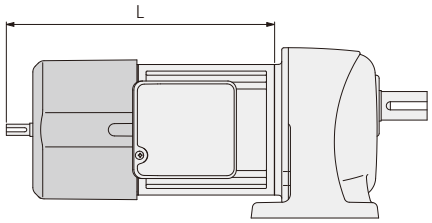

[Figure-2]

Motor Power	Overall length (L)		
	Standard type [Figure-1]		Motor Shaft Extension [Figure-2]
	No Brake	Brakemotor	Common to No brake/brakemotor
0.4 kW	176	196	263
0.75 kW	217	236	301
1.5 kW	252.5	281.5	355.5
2.2 kW	302	331	405

Encoders

An encoder can be attached to the rear of the motor with the specifications shown in the table below. If you require this option, please place an order with the appropriate option code shown in the table below.

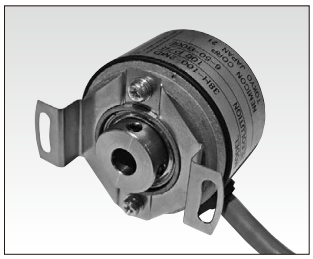

Encoder Appearance
* The encoder will not be visible on the appearance of the product because it will be contained in the fan cover.
* The protective structure of the encoder is IP50.
Please note that this protective structure is different from the protective structure marked on the nameplate.

■ Target Models

Induction Gearmotors

0.1 kW to 2.2 kW No brake/brakemotor (except water-resistant specification IP65)

Note 1: When it is necessary to adjust the gap of the brake or replace the brake unit, please contact us for repair.

■ Encoder Specifications

Option	Option Code	Specification	
		Number of Pulses	Output Method
X	X0	100 p/r	A/B/Z Line Drive
X	X1	1024 p/r	A/B/Z Line Drive
X	X2	1024 p/r	A/B/Z Open collector

Note 1: If you require an encoder with specifications not listed in the table, it may be manufactured as a custom order. Please consult us
Note 2: When an encoder is to be mounted by the customer, consult us for specifications with just the shaft and mount for encoder mounting.
Note 3: The encoder and shaft are fixed with a set screw with adhesive in order to prevent loosening.Contact us for shipping the product without adhesive.
In this case, please take action to prevent the loosening of the set screw by yourself.

Model example: Standard specification G3L28N30-MM04TNNTB2 ⇒ With an encoder G3L28N30-MM04TNNTB2XX0

■ Electrical Specifications

		X0 / X1	X2
Supply Voltage		4.5 to13.2 VDC	4.5 to 30 VDC
Current Consumption		30 mA MAX	30 mA MAX
Output Voltage	H Level	2.5 V or more	–
	L Level	0.5 V or below	0.5 V or below (at maximum sink)
Maximum Draw-in Current		20 mA	40 mA
Maximum Response Frequency		120 kHz	120 kHz
Rise and Fall Time		100 ns MAX	1 μs MAX

■ Connector Specifications

X0 / X1		
Hirose Electric DF3-9S-2C		
Terminal No.	Color	Connection
1	Red	Vcc
2	Black	0V
3	Green	Sig A
4	Blue	Sig $\overline{A}$
5	White	Sig B
6	Gray	Sig $\overline{B}$
7	Yellow	Sig Z
8	Orange	Sig $\overline{Z}$
9	Black	Shield

X2		
Hirose Electric DF3-6S-2C		
Terminal No.	Color	Connection
1	Red	Vcc
2	Black	0V
3	Blue	Sig A
4	White	Sig B
5	Yellow	Sig Z
6	Black	Shield

■ Waveform Specifications

*The following is the waveform for the reverse motion of the motor.

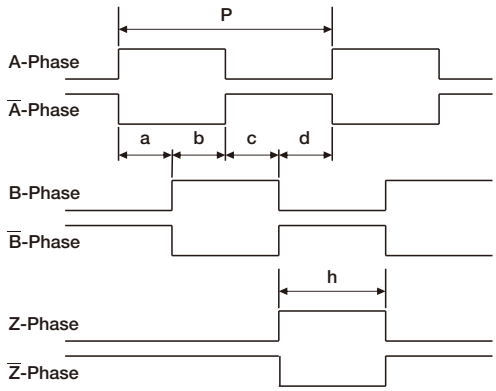

Signal A, B a, b, c, d = (P/4) ± (P/8)
Duty = (P/2) ± (P/4)
Signal Z (P/4) ≤ h ≤ (3P/4)

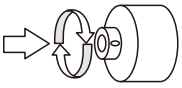

Encoders

■ Product Appearance Dimensions

When an encoder is mounted, the overall length of the motor will increase.
For details, please refer to the table shown below.

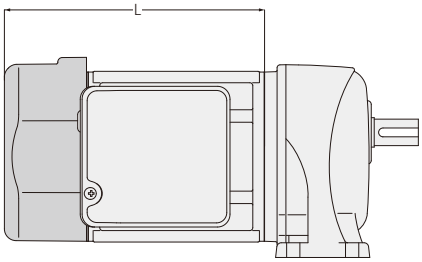

[Standard type appearance example]
*Models without fan cover are available.

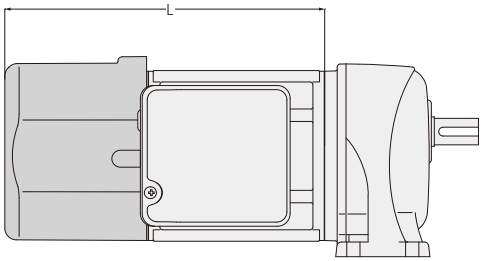

[Encoder-equipped appearance example]

● Induction Gearmotors

Motor Power	Overall length (L)			Encoder Cable Effective Length
	Standard type		With Encoder	
	No Brake	Brakemotor	Common to No brake/ brakemotor	
0.1 kW	114	154	205.5	350
0.2 kW	129	179.5	220.5	350
0.4 kW	176	196	237	350
0.75 kW	217	236	276	300
1.5 kW	252.5	281.5	322.5	250
2.2 kW	302	331	372	250

Note 1: The product will be shipped with the encoder cable drawn out of the gap of the fan cover.
Note 2: Gearmotors with a motor power of 0.1 kW or 0.2 kW does not include the fan cover.

Forced Fan

A forced fan can be attached to the rear of the motor with the specifications shown in the table below. If you require this option, please place an order with the appropriate option code shown in the table below.

■ Target Models

Induction Gearmotors

0.1 kW to 2.2 kW: No brake/brakemotor (except water-resistant specification IP65)

■ Forced Fan Specifications

Option	Option Code	Specification			
		Supply Voltage	Frequency	Speed	Rated Current
X	X7	200 VAC±10 %	50 Hz	2600 r/min	0.05 A
		200 VAC±10 %	60 Hz	3000 r/min	0.04 A

Model example: Standard specification G3L28N30-MM04TNNTB2 ⇒ With forced fan G3L28N30-MM04TNNTB2XX7

■ Product Outline Dimensions

When a forced fan is installed, the overall length of the motor will increase. For details, please refer to the table shown below.

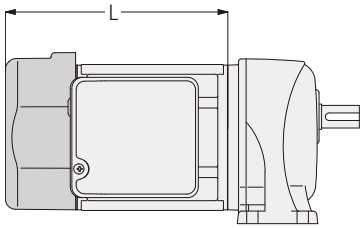

[Figure-1]

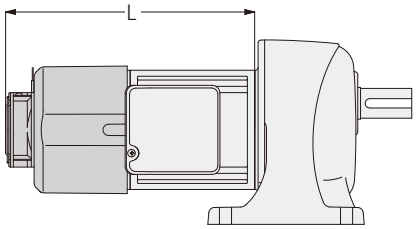

[Figure-2]

Power	Overall length (L)		
	Standard type [Figure-1]		With Forced Fan [Figure-2]
	No Brake	Brakemotor	Common
0.1 kW	114	154	236.5
0.2 kW	129	179.5	251.5
0.4 kW	176	196	268
0.75 kW	217	236	304
1.5 kW	252.5	281.5	353.5
2.2 kW	302	331	403

Note 1: The protective structure of the forced fan is IP10. Please note that this protective structure is different from the protective structure marked on the nameplate.
Note 2: The motor will be shipped with the forced fan cable flied.

Cable Glands

A gearmotor with a T type terminal box can be shipped together with an attachable cable gland. If you require this option, please place an order with the appropriate option code shown in the table below.

■ Target Models

Induction Gearmotors
0.1 kW to 2.2 kW: All models with a T type terminal box

Option	Option Code
X	CC

Model example: Standard specification G3L28N30-MM04TNNTB2 ⇒ With cable gland G3L28N30-MM04TNNTB2XCC

■ Product Outline Dimensions and Specifications

● With a terminal box attached

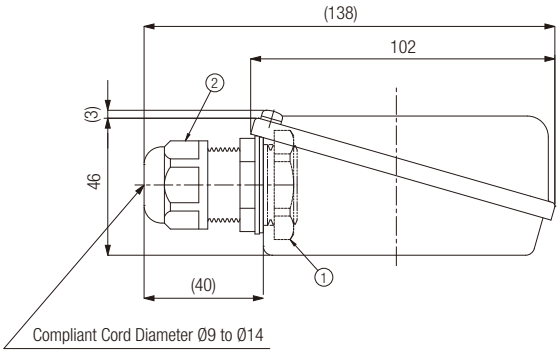

■ Cable Gland Specifications

AVC Corporation of Japan (FGA26S-14B)
Body Material: Nylon 66 (UL94V-2)
IP Rating: IP68/5 atmospheric pressure
Conforming Standard: UL-C & US/CE
Color: Black

Wrench Size Lock/Seal: 33/27

● Tightening Torques (Reference Values)

① Lock nut: 2.4 to 3.4 N·m
② Sealing nut: 1.8 to 2.5 N·m

Note 1: A cable gland will be shipped with the product. Attach the cable gland to the terminal box yourself.
Note 2: Please note that depending on the position of the terminal box and its hole direction, a cable gland may interfere with the peripheral parts when installed, and hinder mounting and wiring.
For more details, please contact your nearest Sales Office or the CS Center.

Output Shaft Tapping (Threading)

The output shaft of the parallel shaft G3 and GA types are tapped to the dimensions shown in the table below (Note 1), but the output shafts of other types are not tapped. If you desire output shaft tapping, we will prepare an output shaft manufactured to the dimensions shown in the table below. Designate these dimensions wherever possible at the time of design. To order tapping, enter “X40” at the end of the model name.
Note 1: Water-resistant specification stainless steel output shafts are not tapped.

Model example: Standard specification H2L22R30-MM02TNNTN ⇒ Output shaft with standard tapping H2L22R30-MM02TNNTNX40

Note 2: The mark “●” in the table indicates a standard stock item. In addition, “▲” indicates that a lead time of about full 10 days is required.
Note 3: Water-resistant specification stainless steel output shafts and dimensions other than those shown in the table below are custom specifications.
Note 4: For lead time, prices, and other details, please contact your nearest Sales Office.

Shaft Diameter (Frame Size)	Size × Pitch × Depth(mm)	G·VG Type (Parallel Shaft)	G3·GA Type (Parallel Shaft)	H·H2 Type (Right Angle Shaft)			F2F·FF·F3F Type (Right Angle Shaft)		
				L Shaft	R Shaft	T Shaft	L Shaft	R Shaft	T Shaft
12/15	M5 × 0.8 × 12	●	Not Available	●	●	●	▲	▲	▲
18	M6 × 1.0 × 15	●	With Output Shaft Tapping	●	●	●	▲	▲	▲
22/28	M8 × 1.25 × 20	With Output Shaft Tapping		●	●	▲	●	▲	▲
32/40	M10 × 1.5 × 25			●	●	▲	●	▲	▲
50	M12 × 1.75 × 30	Not Available		●	●	▲	Not Available	Not Available	Not Available

Note 5: The GA type is available only in frame size 50.

Output Shaft Hole Diameter Custom Specifications

Output shafts with the internal diameters shown in the table below are also available for the FS, FAS and F3S types (right angle hollow bore).
Order a desired shaft diameter with the appropriate option code shown in the table below.

Note 1: It is necessary to examine the strength of the shaft to be inserted.
Note 2: Shafts for reduction ratio 1/5 cannot be manufactured.
Note 3: For lead time, prices, and other details, please contact your nearest Sales Office.

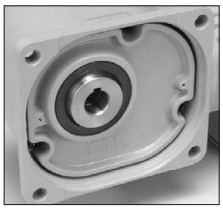

Model name example: Standard specification F3S25N30-MM02TNNTN ⇒ Output shaft diameter Ø20 specification F3S25N30-MM02TNNTNXF2

■ FS/FAS Type (Right Angle Hollow Bore)

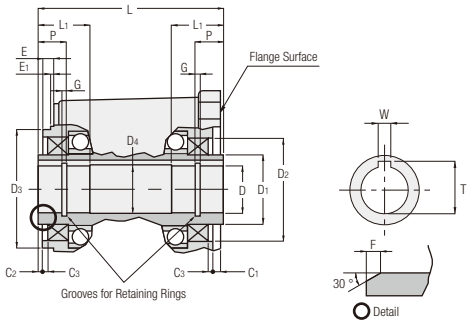

● Right Angle Hollow Bore Detailed Dimensions

Frame Size	Internal Diameter of Right Angle Hollow Bore	D (H8)	D_1	D_2 (H8)	D_3 (h8)	D_4	W	T	L	L_1	P	C_1	C_2	C_3	E	E_1	F	G	Option Code
25	Ø20	Ø20	Ø39	Ø58	Ø66	Ø21	6	22.8	108	27	14	6	2	3	6	0	2	1.15	F2
30	Ø25	Ø25	Ø44	Ø65	Ø75	Ø26	8	28.3	117	33	17	5	2	3	7	0	2	1.35	F3
35	Ø30	Ø30	Ø49	Ø72	Ø85	Ø31	8	33.3	124	38	20	3	2	3	7	0	2	1.35	F4
45	Ø35	Ø35	Ø64	Ø85	Ø100	Ø36	10	38.3	140	50	26	3	2	3	6	0	2	1.75	F5
	Ø40	Ø40	Ø64	Ø85	Ø100	Ø41	12	43.3	140	50	26	3	2	3	6	0	2	1.95	F6
55	Ø45	Ø45	Ø79	Ø100	Ø120	Ø46	14	48.8	181	61	32	5	2	5	10	2	2	1.95	F7
	Ø50	Ø50	Ø79	Ø100	Ø120	Ø51	14	53.8	181	61	32	5	2	5	10	2	2	2.20	F8

Note 1: The FA type is frame size 55 only.

■ F3S Types (Right Angle Hollow Bore)

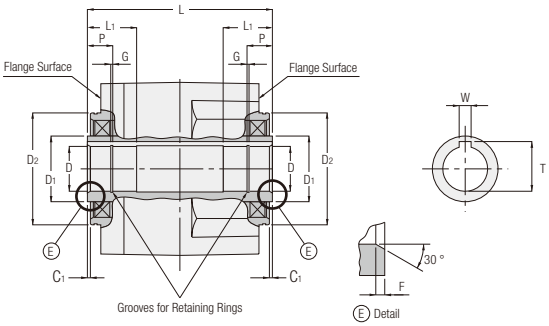

● Right Angle Hollow Bore Detailed Dimensions

Frame Size	Internal Diameter of Right Angle Hollow Bore	D (H8)	D_1	D_2 (h7)	W	T	L	L_1	P	C_1	F	G	Option Code
25	Ø20	Ø20	Ø39	Ø66	6	22.8	118	27	14	2	2	1.15	F2
30	Ø25	Ø25	Ø44	Ø75	8	28.3	124	33	17	2	2	1.35	F3
35	Ø30	Ø30	Ø49	Ø85	8	33.3	142	38	20	2	2	1.35	F4
45	Ø35	Ø35	Ø64	Ø100	10	38.3	168	50	26	2	2	1.75	F5
	Ø40	Ø40	Ø64	Ø100	12	43.3	168	50	26	2	2	1.95	F6

MEMO

BATTERY POWERED GEARMOTORS

P.659 **VG/APG Type Parallel Shaft**

P.675 **VH Type/Right Angle Shaft**

P.683 **VF3S/VF3F Type Concentric Right Angle Hollow Bore/ Concentric Right Angle Shaft**
F3S Type/Right Angle Shaft

P.699 **Control Unit Specification**

P.735 **Technical Documentation**

P.747 **Option**

VG/APG Type

Parallel Shaft

P.664

BATTERY POWERED GEARMOTORS
1. Battery Powered Gearmotors
1-1. Performance Tables
1-2. Drawings

Model and Type Codes
Standard Model Lineup

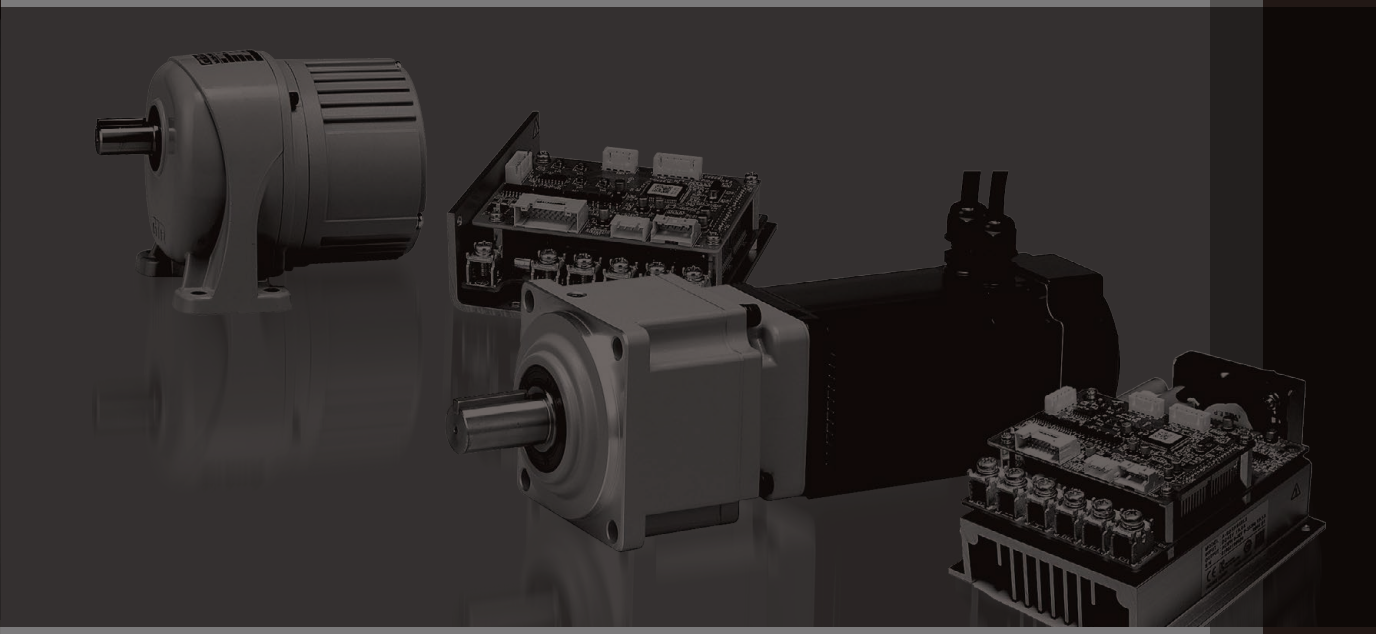

Model and Type Codes

The drive is sold separately. Refer to Type Code on page 707.

VG Type Battery Powered Gearmotors

Mounting Type	Brake Type	Frame Size	Shaft Arrangement		Reduction Ratio	Common Code	Motor Power	Supply Voltage	Option
VGL	C	12		–	30	N	50	L1A	
VGL	D	22		–	80	N	200	L4A	X
VGK	C	28		–	160	N	200	L2A	
VGK	D	32		–	120	N	400	L2A	
①	②	③	④		⑤	⑥	⑦	⑧	⑨

①Mounting Type	VGL : Parallel Shaft Foot Mount
	VGK : Parallel Shaft Small Flange Mount
②Brake Type	C : No Brake
	D : Brakemotor
③Frame Size and Output Shaft Diameter	Output Shaft Diameter
④Shaft Arrangement	Parallel Shaft: Blank
⑤Reduction Ratio	5:1/5 to 200:1/200
⑥Common Code	N : Common Code
⑦Motor Power	50 : 50 W
	100 : 0.1 kW
	200 : 0.2 kW
	400 : 0.4 kW
⑧Supply Voltage (Note 1)	L1A : 12 VDC
	L2A : 24 VDC
	L4A : 48 VDC
⑨Option	Blank : Standard Specification
	X : Special Specification Code

Note 1: 48 VDC is CCC-certified Product.

The drive is sold separately. Refer to Type Code on page 707.

APG Type Battery Powered Gearmotors

Mounting Type	Frame Size	Shaft Arrangement	Reduction Ratio		Motor Type	Motor Specifications	Motor Power	Supply Voltage	Standard	Brake Type	Option
APG	22	N	20	–	SD	M	080	L4	A	N	
APG	28	N	60	–	SD	W	080	L4	A	B	X
APG	28	N	50	–	SD	M	080	L4	A	N	
①	②	③	④		⑤	⑥	⑦	⑧	⑨	⑩	⑪

①Mounting Type	APG : Parallel Shaft
②Frame Size and Output Shaft Diameter	Output Shaft Diameter
③Shaft Arrangement	N : Parallel Shaft
④Reduction Ratio	15:1/15 to 60:1/60
⑤Motor Type	SD : Brushless Motor SD Series
⑥Motor Specifications	M : IP44
	W : IP65
⑦Motor Power	080 : 0.75 kW
⑧Supply Voltage	L4 : 48 VDC
⑨Standard	A : CCC
⑩Brake Type	N : No Brake
	B : Brakemotor
⑪Option	Blank : Standard Specification
	X : Special Specification Code

Standard Model Lineup

VG Type Battery Powered Gearmotors

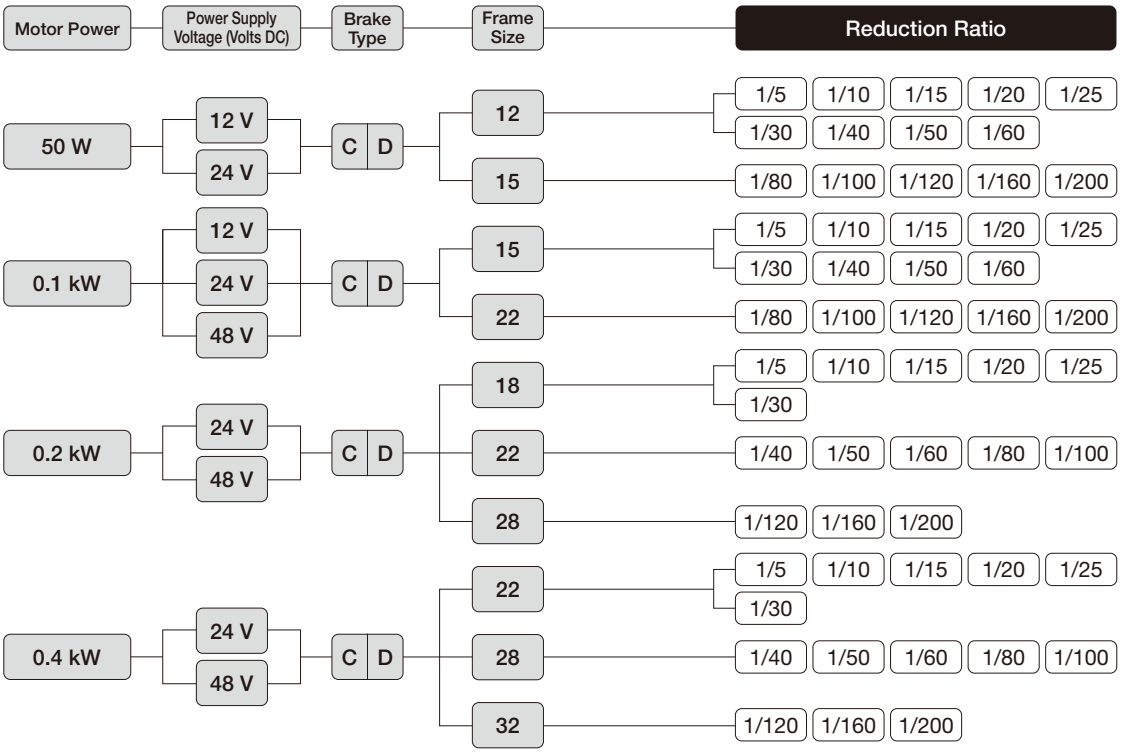

Note 1: The VG Type is available in two different mounting types: Foot mount and Flange mount.

APG Type Battery Powered Gearmotors

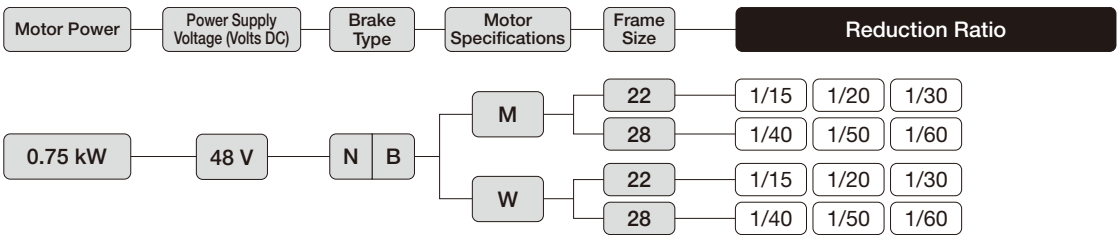

MEMO

1. Battery Powered Gearmotors

1-1. Performance Tables

VG Type Battery Powered Gearmotors

[Notes]

- The values in parentheses ( ) in the drawings are the indications for gearmotors with brake.
- ▭ in the performance table indicates that the shaft rotates clockwise with a drive CW command when viewed from the output shaft side under the conditions shown in the figure on the right.
- Change the signal from the drive to CCW in order to change the rotation direction.
- The performance table shows two reduction ratios: reduction ratio and actual reduction ratio.
- The key dimensions and tolerances for output shafts conform to the normal type specified in JIS B 1301-1996 plain form.
- Allowable output shaft O.H.L. is the value at the middle of the output shaft. For other cases, see page 741.
- The output shaft speed is the variable speed range shown (100 to 3000r/min) calculated from the actual reduction ratio.

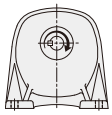
Foot Mount

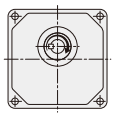
Small Flange Mount

Series	Power	Power Supply	Frame Size	Nominal Reduction Ratio	Actual Reduction Ratio	Output Shaft Speed	Allowable Output Shaft Torque (Continuous)	Allowable Output Shaft O.H.L.	Drawings	
		V				r/min	N·m	N	Foot Mount	Small Flange Mount
V	50 W	12 VDC 24 VDC	12	1/5	1/5	20.0 to 600	0.76	150	P.666	P.669
				1/10	1/10	10.0 to 300	1.57	220		
				1/15	17/260	6.6 to 196	2.35	250		
				1/20	1/20	5.0 to 150	3.23	290		
				1/25	1/25	4.0 to 120	4.02	340		
				1/30	1/30	3.4 to 100	4.90	390		
				1/40	1/40	2.5 to 75	6.47	390		
				1/50	1/50	2.0 to 60	8.13	390		
				1/60	1/60	1.7 to 50	9.70	390		
			15	1/80	1/80	1.3 to 37	12.7	690	P.666	P.669
				1/100	1/100	1.0 to 30	15.7	690		
				1/120	11/1280	0.9 to 25	18.6	690		
				1/160	1/160	0.7 to 18	24.5	690		
				1/200	1/200	0.5 to 15	30.4	690		
	0.1 kW	12 VDC 24 VDC 48 VDC	15	1/5	1/5	20.0 to 600	1.67	150	P.666	P.669
				1/10	1/10	10.0 to 300	3.43	340		
				1/15	1/15	6.7 to 200	5.10	440		
				1/20	1/20	5.0 to 150	6.86	540		
				1/25	1/25	4.0 to 120	8.53	590		
				1/30	1/30	3.4 to 100	9.80	690		
				1/40	1/40	2.5 to 75	12.7	780		
				1/50	1/50	2.0 to 60	16.7	880		
				1/60	1/60	1.7 to 50	19.6	880		
			22	1/80	21/1634	1.3 to 38	25.5	1570	P.667	P.670
				1/100	7/684	1.1 to 30	32.3	1670		
				1/120	147/17974	0.9 to 24	39.2	1670		
				1/160	21/3268	0.7 to 19	51.9	1760		
				1/200	21/4085	0.6 to 15	64.7	1760		
	0.2 kW	24 VDC 48 VDC	18	1/5	231/1148	20.2 to 603	3.04	250	P.667	P.670
				1/10	77/779	9.9 to 296	6.18	540		
				1/15	119/1804	6.6 to 197	9.21	780		
				1/20	49/984	5.0 to 149	11.7	1080		
				1/25	28/697	4.1 to 120	15.7	1180		
				1/30	35/1066	3.3 to 98	18.6	1320		
			22	1/40	91/3600	2.6 to 75	24.5	1570	P.667	P.670
				1/50	11/540	2.1 to 61	30.4	1620		
				1/60	637/39600	1.7 to 48	35.3	1670		
				1/80	91/7200	1.3 to 37	47.0	1720		
				1/100	11/1080	1.1 to 30	58.8	1760		
			28	1/120	91/11000	0.9 to 24	70.6	2600	P.668	P.671
				1/160	1/165	0.7 to 18	94.1	2700		
				1/200	7/1375	0.6 to 15	118	2740		
	0.4 kW	24 VDC 48 VDC	22	1/5	7/34	20.6 to 617	5.40	390	P.667	P.670
				1/10	7/68	10.3 to 308	10.8	780		
				1/15	49/748	6.6 to 196	17.6	1080		
				1/20	7/136	5.2 to 154	23.5	1370		
				1/25	7/170	4.2 to 123	31.4	1470		
				1/30	35/1037	3.4 to 101	37.2	1670		
			28	1/40	221/8610	2.6 to 77	49.0	2250	P.668	P.671
				1/50	187/9030	2.1 to 62	60.8	2350		
				1/60	169/9840	1.8 to 51	70.6	2450		
				1/80	65/5166	1.3 to 37	94.1	2550		
				1/100	55/5418	1.1 to 30	118	2650		
			32	1/120	77/9360	0.9 to 24	137	4700	P.668	P.671
				1/160	21/3328	0.7 to 18	186	5000		
				1/200	189/38272	0.5 to 14	235	5100		

APG Type Battery Powered Gearmotors

[Notes]
- The values in parentheses ( ) in the drawings are the indications for gearmotors with brake.
- Allowable output shaft O.H.L. is the value at the middle of the output shaft. For other cases, see page 741.
- The rotational direction of the output shaft is the same as that of the motor.
- The key dimensions and tolerances for output shafts conform to the normal type specified in JIS B 1301-1996 plain form.
- Adjust the speed control proportional gain so that the load of inertia on the output shaft side does not vibrate during acceleration and deceleration.
- It is a time rated product. Refer to page 706.

Series	Power	Power Supply	Frame Size	Reduction Ratio	Output Shaft Speed	Allowable Output Shaft Torque	Allowable Output Shaft O.H.L.	Allowable Output Shaft Thrust Load	Drawings
		V			r/min	N·m	N	N	
SD	0.75 kW	48 VDC	22	1/15	5.3 to 270	30.4	1950	975	P.672
				1/20	4.0 to 200	40.6	2150	1075	
				1/30	2.7 to 130	60.9	2450	1225	
			28	1/40	2.0 to 100	81.2	3450	1725	P.673
				1/50	1.6 to 80	95.5	3520	1760	
				1/60	1.3 to 67	121.8	3520	1760	

1-2. Drawings

VG Type Parallel Shaft | Shaft Diameter **12** | **Foot** Mounting

The values in parentheses ( ) are the indications for gearmotors with brake.

<Figure 1>

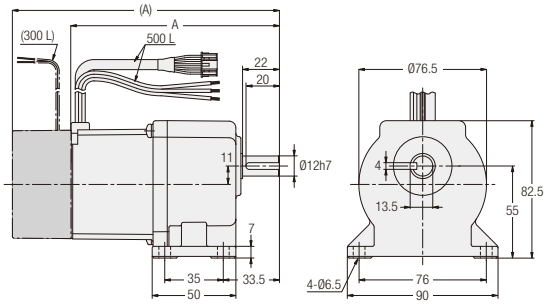

Power	Voltage	Part Number	Reduction Ratio	Figure Number	Brake	Approx. Weight (kg)	A
50 W	12 VDC	VGLC12-∗∗∗N50L1A	5, 10, 15, 20, 25, 30, 40, 50, 60	1	No	1.1	126.5
		VGLD12-∗∗∗N50L1A			Yes	1.5	159.5
50 W	24 VDC	VGLC12-∗∗∗N50L2A	5, 10, 15, 20, 25, 30, 40, 50, 60	1	No	1.1	126.5
		VGLD12-∗∗∗N50L2A			Yes	1.5	159.5

Note: A reduction ratio will be indicated as ∗∗∗ in the nomenclature.
Note: Please refer to page 664 for the performance table.

VG Type Parallel Shaft | Shaft Diameter **15** | **Foot** Mounting

<Figure 2>

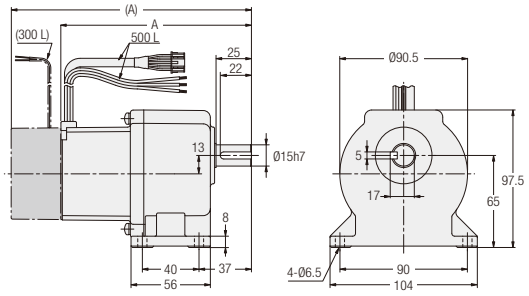

<Figure 3>

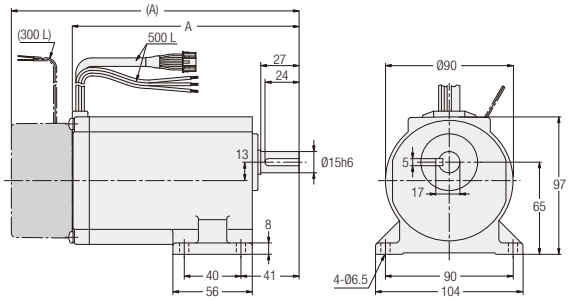

Power	Voltage	Part Number	Reduction Ratio	Figure Number	Brake	Approx. Weight (kg)	A
50 W	12 VDC	VGLC15-∗∗∗N50L1A	80, 100, 120, 160, 200	2	No	1.5	136.5
		VGLD15-∗∗∗N50L1A			Yes	1.9	169.5
50 W	24 VDC	VGLC15-∗∗∗N50L2A	80, 100, 120, 160, 200	2	No	1.5	136.5
		VGLD15-∗∗∗N50L2A			Yes	1.9	169.5
0.1 kW	12 VDC	VGLC15-∗∗∗N100L1A	5, 10, 15, 20, 25, 30, 40, 50, 60	3	No	2.3	162
		VGLD15-∗∗∗N100L1A			Yes	2.8	203
0.1 kW	24 VDC	VGLC15-∗∗∗N100L2A	5, 10, 15, 20, 25, 30, 40, 50, 60	3	No	2.3	162
		VGLD15-∗∗∗N100L2A			Yes	2.8	203
0.1 kW	48 VDC	VGLC15-∗∗∗N100L4A	5, 10, 15, 20, 25, 30, 40, 50, 60	3	No	2.3	162
		VGLD15-∗∗∗N100L4A			Yes	2.8	203

Note: A reduction ratio will be indicated as ∗∗∗ in the nomenclature.
Note: Please refer to page 664 for the performance table.

VG Type Parallel Shaft | Shaft Diameter **18** | **Foot** Mounting

The values in parentheses ( ) are the indications for gearmotors with brake.

<Figure 1>

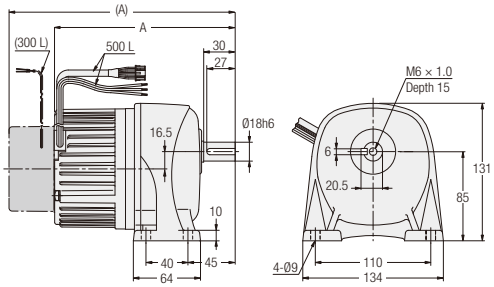

Power	Voltage	Part Number	Reduction Ratio	Figure Number	Brake	Approx. Weight (kg)	A
0.2 kW	24 VDC	VGLC18-∗∗∗N200L2A	5, 10, 15, 20, 25, 30	1	No	4.5	174.5
		VGLD18-∗∗∗N200L2A			Yes	5.0	216
0.2 kW	48 VDC	VGLC18-∗∗∗N200L4A	5, 10, 15, 20, 25, 30	1	No	4.5	174.5
		VGLD18-∗∗∗N200L4A			Yes	5.0	216

Note: A reduction ratio will be indicated as ∗∗∗ in the nomenclature.
Note: Please refer to page 664 for the performance table.

VG Type Parallel Shaft | Shaft Diameter **22** | **Foot** Mounting

<Figure 2>

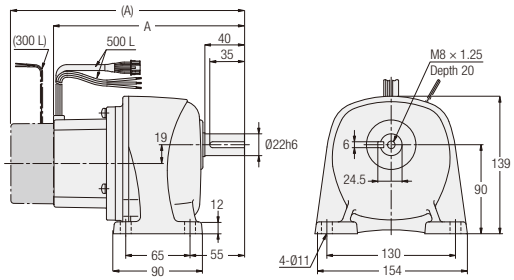

<Figure 3>

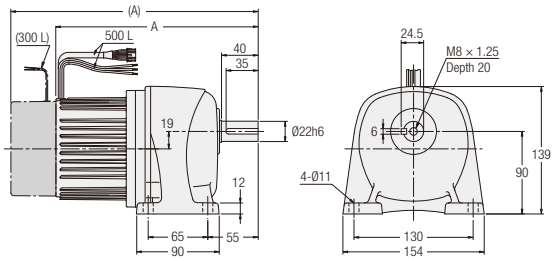

Power	Voltage	Part Number	Reduction Ratio	Figure Number	Brake	Approx. Weight (kg)	A
0.1 kW	12 VDC	VGLC22-∗∗∗N100L1A	80, 100, 120, 160, 200	2	No	4.5	195
		VGLD22-∗∗∗N100L1A			Yes	5.0	236
0.1 kW	24 VDC	VGLC22-∗∗∗N100L2A	80, 100, 120, 160, 200	2	No	4.5	195
		VGLD22-∗∗∗N100L2A			Yes	5.0	236
0.1 kW	48 VDC	VGLC22-∗∗∗N100L4A	80, 100, 120, 160, 200	2	No	4.5	195
		VGLD22-∗∗∗N100L4A			Yes	5.0	236
0.2 kW	24 VDC	VGLC22-∗∗∗N200L2A	40, 50, 60, 80, 100	3	No	5.0	200.5
		VGLD22-∗∗∗N200L2A			Yes	5.5	242
0.2 kW	48 VDC	VGLC22-∗∗∗N200L4A	40, 50, 60, 80, 100	3	No	5.0	200.5
		VGLD22-∗∗∗N200L4A			Yes	5.5	242
0.4 kW	24 VDC	VGLC22-∗∗∗N400L2A	5, 10, 15, 20, 25, 30	3	No	6.0	223
		VGLD22-∗∗∗N400L2A			Yes	6.5	269
0.4 kW	48 VDC	VGLC22-∗∗∗N400L4A	5, 10, 15, 20, 25, 30	3	No	6.0	223
		VGLD22-∗∗∗N400L4A			Yes	6.5	269

Note: A reduction ratio will be indicated as ∗∗∗ in the nomenclature.
Note: Please refer to page 664 for the performance table.

VG Type Parallel Shaft | Shaft Diameter 28 | Foot Mounting

The values in parentheses ( ) are the indications for gearmotors with brake.

<Figure 1>

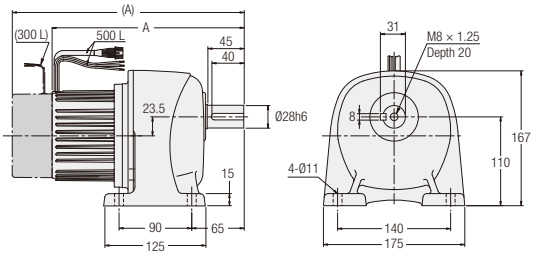

Power	Voltage	Part Number	Reduction Ratio	Figure Number	Brake	Approx. Weight (kg)	A
0.2 kW	24 VDC	VGLC28-∗∗∗N200L2A	120, 160, 200	1	No	7.0	213.5
		VGLD28-∗∗∗N200L2A			Yes	7.5	255
0.2 kW	48 VDC	VGLC28-∗∗∗N200L4A	120, 160, 200	1	No	7.0	213.5
		VGLD28-∗∗∗N200L4A			Yes	7.5	255
0.4 kW	24 VDC	VGLC28-∗∗∗N400L2A	40, 50, 60, 80, 100	1	No	8.0	239
		VGLD28-∗∗∗N400L2A			Yes	8.5	285
0.4 kW	48 VDC	VGLC28-∗∗∗N400L4A	40, 50, 60, 80, 100	1	No	8.0	239
		VGLD28-∗∗∗N400L4A			Yes	8.5	285

Note: A reduction ratio will be indicated as ∗∗∗ in the nomenclature.
Note: Please refer to page 664 for the performance table.

VG Type Parallel Shaft | Shaft Diameter 32 | Foot Mounting

<Figure 2>

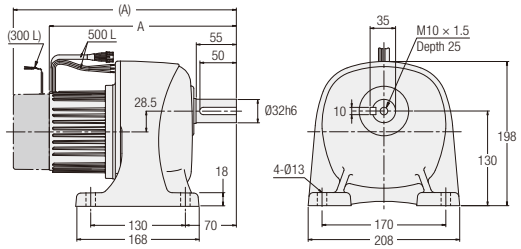

Power	Voltage	Part Number	Reduction Ratio	Figure Number	Brake	Approx. Weight (kg)	A
0.4 kW	24 VDC	VGLC32-∗∗∗N400L2A	120, 160, 200	2	No	11.5	258
		VGLD32-∗∗∗N400L2A			Yes	12.0	304
0.4 kW	48 VDC	VGLC32-∗∗∗N400L4A	120, 160, 200	2	No	11.5	258
		VGLD32-∗∗∗N400L4A			Yes	12.0	304

Note: A reduction ratio will be indicated as ∗∗∗ in the nomenclature.
Note: Please refer to page 664 for the performance table.

VG Type Parallel Shaft | Shaft Diameter **12** | **Small Flange** Mounting

The values in parentheses ( ) are the indications for gearmotors with brake.

<Figure 1>

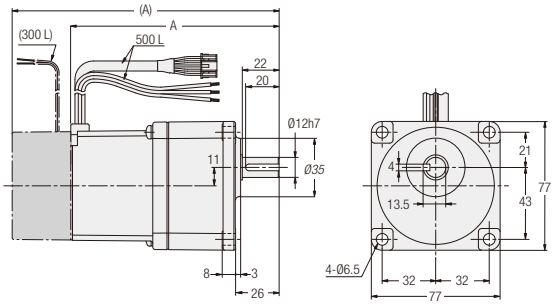

Note: The italic dimension indicates areas with remaining casting surface. Please add 0.5 mm or more to the italic dimension for the diameter of the mating hole.

Power	Voltage	Part Number	Reduction Ratio	Figure Number	Brake	Approx. Weight (kg)	A
50 W	12 VDC	VGKC12-***N50L1A	5, 10, 15, 20, 25, 30, 40, 50, 60	1	No	1.1	126.5
		VGKD12-***N50L1A			Yes	1.5	159.5
50 W	24 VDC	VGKC12-***N50L2A	5, 10, 15, 20, 25, 30, 40, 50, 60	1	No	1.1	126.5
		VGKD12-***N50L2A			Yes	1.5	159.5

Note: A reduction ratio will be indicated as *** in the nomenclature.
Note: Please refer to page 664 for the performance table.

VG Type Parallel Shaft | Shaft Diameter **15** | **Small Flange** Mounting

<Figure 2>

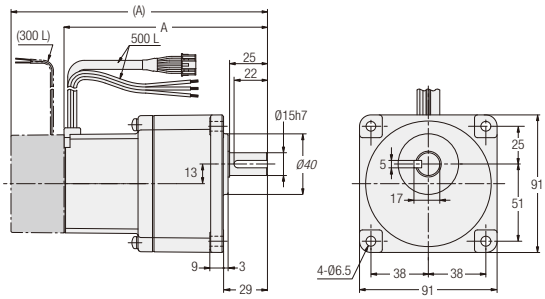

<Figure 3>

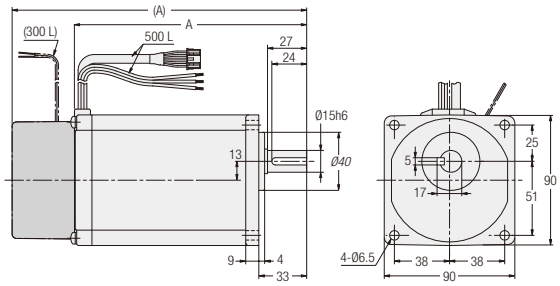

Note: The italic dimension indicates areas with remaining casting surface. Please add 0.5 mm or more to the italic dimension for the diameter of the mating hole.

Power	Voltage	Part Number	Reduction Ratio	Figure Number	Brake	Approx. Weight (kg)	A
50 W	12 VDC	VGKC15-***N50L1A	80, 100, 120, 160, 200	2	No	1.5	136.5
		VGKD15-***N50L1A			Yes	1.9	169.5
50 W	24 VDC	VGKC15-***N50L2A	80, 100, 120, 160, 200	2	No	1.5	136.5
		VGKD15-***N50L2A			Yes	1.9	169.5
0.1 kW	12 VDC	VGKC15-***N100L1A	5, 10, 15, 20, 25, 30, 40, 50, 60	3	No	2.3	162
		VGKD15-***N100L1A			Yes	2.8	203
0.1 kW	24 VDC	VGKC15-***N100L2A	5, 10, 15, 20, 25, 30, 40, 50, 60	3	No	2.3	162
		VGKD15-***N100L2A			Yes	2.8	203
0.1 kW	48 VDC	VGKC15-***N100L4A	5, 10, 15, 20, 25, 30, 40, 50, 60	3	No	2.3	162
		VGKD15-***N100L4A			Yes	2.8	203

Note: A reduction ratio will be indicated as *** in the nomenclature.
Note: Please refer to page 664 for the performance table.

VG Type Parallel Shaft | Shaft Diameter 18 | Small Flange Mounting

The values in parentheses ( ) are the indications for gearmotors with brake.

<Figure 1>

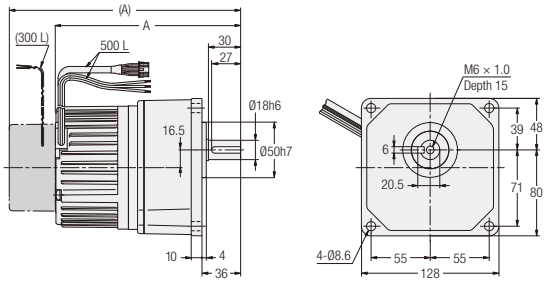

Power	Voltage	Part Number	Reduction Ratio	Figure Number	Brake	Approx. Weight (kg)	A
0.2 kW	24 VDC	VGKC18-∗∗∗N200L2A	5, 10, 15, 20, 25, 30	1	No	4.5	174.5
		VGKD18-∗∗∗N200L2A			Yes	5.0	216
0.2 kW	48 VDC	VGKC18-∗∗∗N200L4A	5, 10, 15, 20, 25, 30	1	No	4.5	174.5
		VGKD18-∗∗∗N200L4A			Yes	5.0	216

Note: A reduction ratio will be indicated as ∗∗∗ in the nomenclature.
Note: Please refer to page 664 for the performance table.

VG Type Parallel Shaft | Shaft Diameter 22 | Small Flange Mounting

<Figure 2>

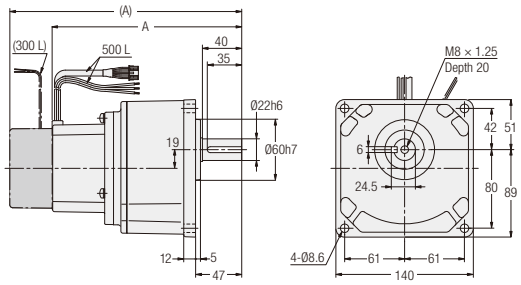

<Figure 3>

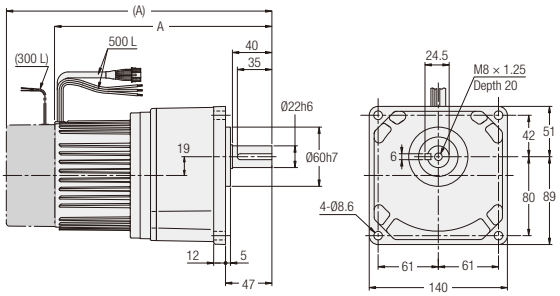

Power	Voltage	Part Number	Reduction Ratio	Figure Number	Brake	Approx. Weight (kg)	A
0.1 kW	12 VDC	VGKC22-∗∗∗N100L1A	80, 100, 120, 160, 200	2	No	4.5	195
		VGKD22-∗∗∗N100L1A			Yes	5.0	236
0.1 kW	24 VDC	VGKC22-∗∗∗N100L2A	80, 100, 120, 160, 200	2	No	4.5	195
		VGKD22-∗∗∗N100L2A			Yes	5.0	236
0.1 kW	48 VDC	VGKC22-∗∗∗N100L4A	80, 100, 120, 160, 200	2	No	4.5	195
		VGKD22-∗∗∗N100L4A			Yes	5.0	236
0.2 kW	24 VDC	VGKC22-∗∗∗N200L2A	40, 50, 60, 80, 100	3	No	5.0	200.5
		VGKD22-∗∗∗N200L2A			Yes	5.5	242
0.2 kW	48 VDC	VGKC22-∗∗∗N200L4A	40, 50, 60, 80, 100	3	No	5.0	200.5
		VGKD22-∗∗∗N200L4A			Yes	5.5	242
0.4 kW	24 VDC	VGKC22-∗∗∗N400L2A	5, 10, 15, 20, 25, 30	3	No	6.0	223
		VGKD22-∗∗∗N400L2A			Yes	6.5	269
0.4 kW	48 VDC	VGKC22-∗∗∗N400L4A	5, 10, 15, 20, 25, 30	3	No	6.0	223
		VGKD22-∗∗∗N400L4A			Yes	6.5	269

Note: A reduction ratio will be indicated as ∗∗∗ in the nomenclature.
Note: Please refer to page 664 for the performance table.

VG Type Parallel Shaft | Shaft Diameter **28** | **Small Flange** Mounting

The values in parentheses ( ) are the indications for gearmotors with brake.

<Figure 1>

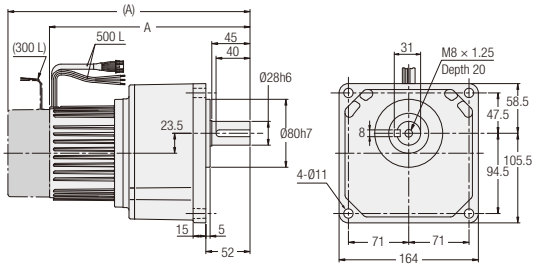

Power	Voltage	Part Number	Reduction Ratio	Figure Number	Brake	Approx. Weight (kg)	A
0.2 kW	24 VDC	VGKC28-∗∗∗N200L2A	120, 160, 200	1	No	7.0	213.5
		VGKD28-∗∗∗N200L2A			Yes	7.5	255
0.2 kW	48 VDC	VGKC28-∗∗∗N200L4A	120, 160, 200	1	No	7.0	213.5
		VGKD28-∗∗∗N200L4A			Yes	7.5	255
0.4 kW	24 VDC	VGKC28-∗∗∗N400L2A	40, 50, 60, 80, 100	1	No	8.0	239
		VGKD28-∗∗∗N400L2A			Yes	8.5	285
0.4 kW	48 VDC	VGKC28-∗∗∗N400L4A	40, 50, 60, 80, 100	1	No	8.0	239
		VGKD28-∗∗∗N400L4A			Yes	8.5	285

Note: A reduction ratio will be indicated as ∗∗∗ in the nomenclature.
Note: Please refer to page 664 for the performance table.

VG Type Parallel Shaft | Shaft Diameter **32** | **Small Flange** Mounting

<Figure 2>

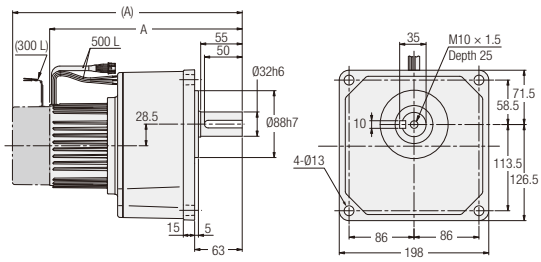

Power	Voltage	Part Number	Reduction Ratio	Figure Number	Brake	Approx. Weight (kg)	A
0.4 kW	24 VDC	VGKC32-∗∗∗N400L2A	120, 160, 200	2	No	11.5	258
		VGKD32-∗∗∗N400L2A			Yes	12.0	304
0.4 kW	48 VDC	VGKC32-∗∗∗N400L4A	120, 160, 200	2	No	11.5	258
		VGKD32-∗∗∗N400L4A			Yes	12.0	304

Note: A reduction ratio will be indicated as ∗∗∗ in the nomenclature.
Note: Please refer to page 664 for the performance table.

APG Type Parallel Shaft | Shaft Diameter 22 | Flange Mounting

The values in parentheses ( ) are the indications for gearmotors with brake.

<Figure 1>

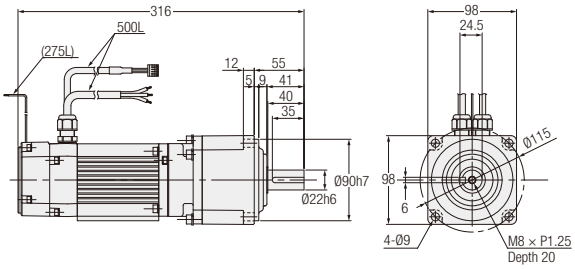

<Figure 2>

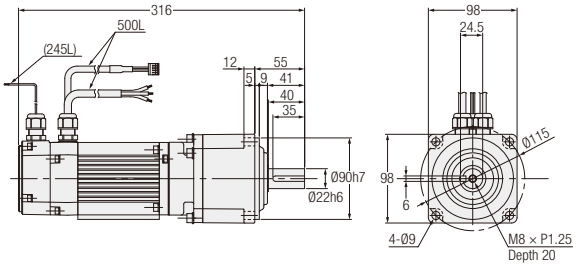

Power	Supply Voltage	Frame Size	Part Number	Motor Specifications	Reduction Ratio	Figure Number	Brake	Approx. Weight (kg)
0.75 kW	48 VDC	22	APG22N∗∗∗-SDM080L4AN	IP44	15, 20, 30	1	No	7.0
			APG22N∗∗∗-SDM080L4AB	IP44			Yes	7.7
			APG22N∗∗∗-SDW080L4AN	IP65			No	7.0
			APG22N∗∗∗-SDW080L4AB	IP65		2	Yes	7.7

Note: A reduction ratio will be indicated as ∗∗∗ in the nomenclature.
Note: Please refer to page 665 for the performance table.
Note: It is a time rated product. Refer to page 706.

APG Type Parallel Shaft | Shaft Diameter 28 | **Flange** Mounting

The values in parentheses ( ) are the indications for gearmotors with brake.

<Figure 1>

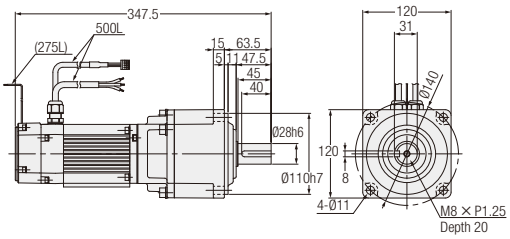

<Figure 2>

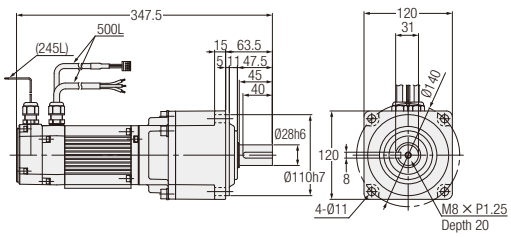

Power	Supply Voltage	Frame Size	Part Number	Motor Specifications	Reduction Ratio	Figure Number	Brake	Approx. Weight (kg)
0.75 kW	48 VDC	28	APG28N***-SDM080L4AN	IP44	40, 50, 60	1	No	9.8
			APG28N***-SDM080L4AB	IP44			Yes	10.5
			APG28N***-SDW080L4AN	IP65			No	9.8
			APG28N***-SDW080L4AB	IP65		2	Yes	10.5

Note: A reduction ratio will be indicated as *** in the nomenclature.
Note: Please refer to page 665 for the performance table.
Note: It is a time rated product. Refer to page 706.

MEMO

VH Type

Right Angle Shaft

Model and Type Codes
Standard Model Lineup

P.678 BATTERY POWERED GEARMOTORS
1. Battery Powered Gearmotors
1-1. Performance Tables
1-2. Drawings

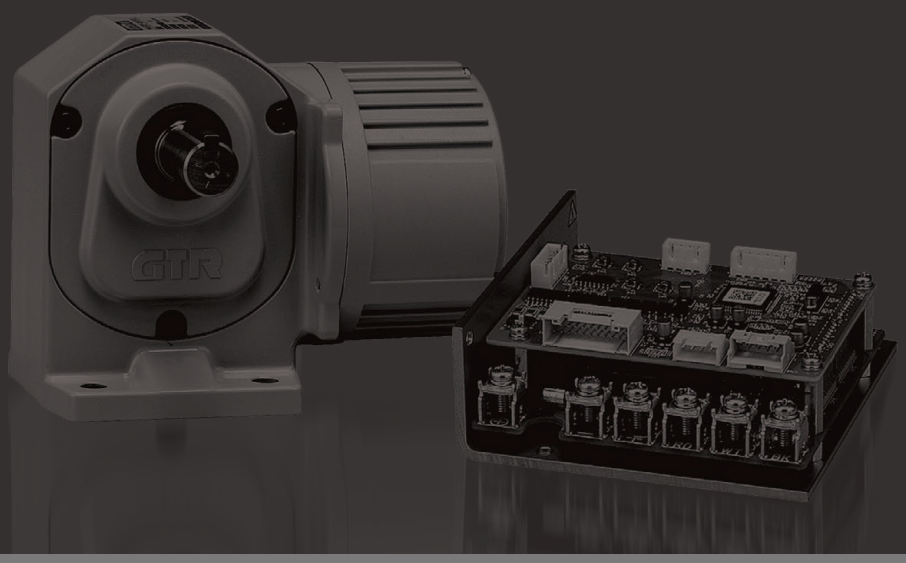

Model and Type Codes

VH Type Battery Powered Gearmotors

Mounting Type	Brake Type	Frame Size	Shaft Arrangement		Reduction Ratio	Common Code	Motor Power	Supply Voltage	Option
VHL	C	18	R	–	30	N	100	L1A	
VHL	D	32	L	–	100	N	400	L4A	X
①	②	③	④		⑤	⑥	⑦	⑧	⑨

①Mounting Type	VHL : Right Angle Shaft Foot Mount		
②Brake Type	C : No Brake		
	D : Brakemotor		
③Frame Size and Output Shaft Diameter	Output Shaft Diameter		
④Shaft Arrangement	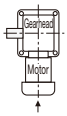 Output shaft on the left side when viewed from the input shaft side (↑)	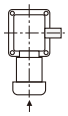 Output shaft on the right side when viewed from the input shaft side (↑)	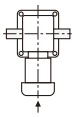 Output shaft on both sides when viewed from the input shaft side (↑)
	L	R	T
⑤Reduction Ratio	5:1/5 to 240:1/240		
⑥Common Code	N : Common Code		
⑦Motor Power	100 : 0.1 kW		
	200 : 0.2 kW		
	400 : 0.4 kW		
⑧Supply Voltage (Note 1)	L1A : 12 VDC		
	L2A : 24 VDC		
	L4A : 48 VDC		
⑨Option	Blank : Standard Specification		
	X : Special Specification Code		

Note 1: 48 VDC is CCC-certified Product.

Standard Model Lineup

VH Type Battery Powered Gearmotors

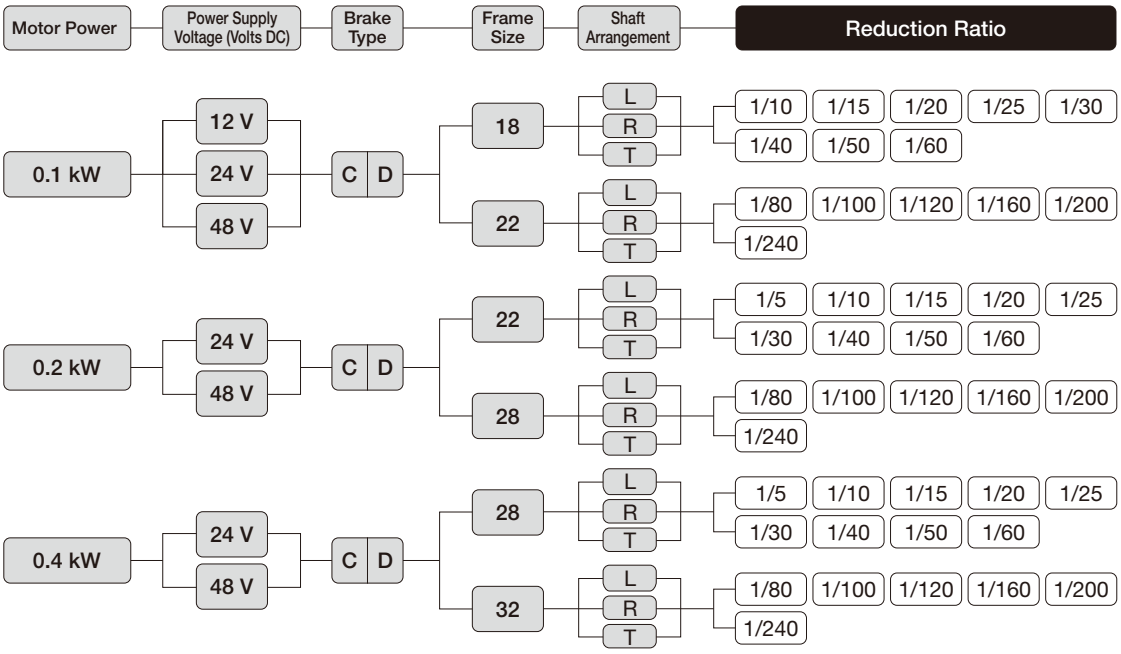

1. Battery Powered Gearmotors

1-1. Performance Tables

VH Type Battery Powered Gearmotors

[Notes]

- The values in parentheses ( ) in the drawings are the indications for gearmotors with brake.
- ▭ in the performance table indicates that the L shaft rotates clockwise with a drive CW command and the R and T shafts rotate counterclockwise when viewed from the output shaft side under the conditions shown in the figure on the right. To change the rotational direction, switch the CW and CCW commands.
- The performance table shows two reduction ratios: reduction ratio and actual reduction ratio.
- The key dimensions and tolerances for output shafts conform to the normal type specified in JIS B 1301-1996 plain form.
- Allowable output shaft O.H.L. is the value at the middle of the output shaft. For other cases, see page 741.
- The output shaft speed is the variable speed range shown (100 to 3000r/min) calculated from the actual reduction ratio.

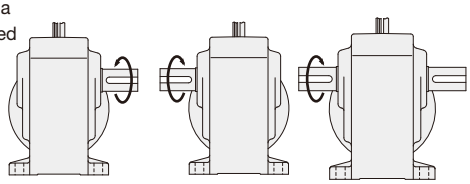

Series	Motor Power	Power Supply	Frame Size	Nominal Reduction Ratio	Actual Reduction Ratio	Output Shaft Speed	Allowable Output Shaft Torque (Continuous)	Allowable Output Shaft O.H.L.	Drawings
		V				r/min	N·m	N	
V	0.1 kW	12 VDC 24 VDC 48 VDC	18	1/10	4/41	9.8 to 292	2.94	390	P.679
				1/15	8/123	6.6 to 195	4.80	540	
				1/20	2/41	4.9 to 146	6.57	690	
				1/25	8/205	4.0 to 117	8.53	780	
				1/30	4/123	3.3 to 97	9.80	880	
				1/40	1/41	2.5 to 73	12.7	980	
				1/50	4/205	2.0 to 58	16.7	1080	
				1/60	2/123	1.7 to 48	19.6	1080	
			22	1/80	1/80	1.3 to 37	25.5	1570	P.680
				1/100	1/100	1.0 to 30	32.3	1570	
				1/120	1/120	0.9 to 25	39.2	1570	
				1/160	1/160	0.7 to 18	51.9	1570	
				1/200	1/200	0.5 to 15	64.7	1570	
				1/240	1/236	0.5 to 12	77.4	1570	
	0.2 kW	24 VDC 48 VDC	22	1/5	1/5	20.0 to 600	2.45	590	P.680
				1/10	1/10	10.0 to 300	5.49	930	
				1/15	1/15	6.7 to 200	8.82	1030	
				1/20	1/20	5.0 to 150	11.8	1180	
				1/25	1/25	4.0 to 120	14.7	1270	
				1/30	1/30	3.4 to 100	18.6	1370	
				1/40	1/40	2.5 to 75	24.5	1570	
				1/50	1/50	2.0 to 60	30.4	1720	
				1/60	1/59	1.7 to 50	35.3	1810	
			28	1/80	1/80	1.3 to 37	47.0	2450	P.681
				1/100	1/100	1.0 to 30	58.8	2650	
				1/120	1/120	0.9 to 25	70.6	2740	
				1/160	1/160	0.7 to 18	94.1	2840	
				1/200	1/200	0.5 to 15	118	2840	
				1/240	1/236	0.5 to 12	137	2840	
	0.4 kW	24 VDC 48 VDC	28	1/5	1/5	20.0 to 600	5.40	930	P.681
				1/10	1/10	10.0 to 300	10.8	1470	
				1/15	1/15	6.7 to 200	17.6	1670	
				1/20	1/20	5.0 to 150	23.5	1860	
				1/25	1/25	4.0 to 120	30.4	2010	
				1/30	1/30	3.4 to 100	36.3	2210	
				1/40	1/40	2.5 to 75	49.0	2450	
				1/50	1/50	2.0 to 60	60.8	2650	
				1/60	1/59	1.7 to 50	70.6	2740	
			32	1/80	1/80	1.3 to 37	90.2	3430	P.682
				1/100	1/100	1.0 to 30	118	3820	
				1/120	1/120	0.9 to 25	137	4120	
				1/160	1/160	0.7 to 18	186	4120	
				1/200	1/200	0.5 to 15	235	4120	
				1/240	1/236	0.5 to 12	284	4120	

1-2. Drawings

VH Type Right Angle Shaft | Shaft Diameter **18** | **Foot** Mounting

The values in parentheses ( ) are the indications for gearmotors with brake.

<Figure 1>

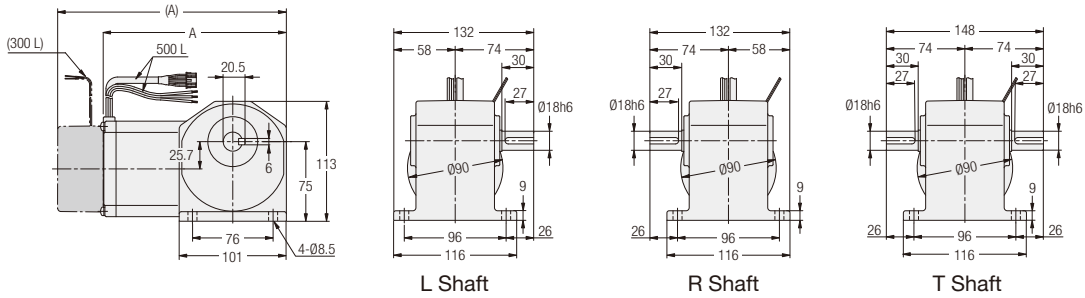

Power	Voltage	Part Number	Reduction Ratio	Figure Number	Brake	Approx. Weight (kg)	A
0.1 kW	12 VDC	VHLC18#-***N100L1A	10, 15, 20, 25, 30, 40, 50, 60	1	No	3.5	174.5
		VHLD18#-***N100L1A			Yes	4.0	215.5
0.1 kW	24 VDC	VHLC18#-***N100L2A	10, 15, 20, 25, 30, 40, 50, 60	1	No	3.5	174.5
		VHLD18#-***N100L2A			Yes	4.0	215.5
0.1 kW	48 VDC	VHLC18#-***N100L4A	10, 15, 20, 25, 30, 40, 50, 60	1	No	3.5	174.5
		VHLD18#-***N100L4A			Yes	4.0	215.5

Note: A shaft arrangement (L, R, T) will be indicated as # in the nomenclature. A reduction ratio will be indicated as ***.
Note: Please refer to page 678 for the performance table.

VH Type Right Angle Shaft | Shaft Diameter 22 | **Foot** Mounting

The values in parentheses ( ) are the indications for gearmotors with brake.

<Figure 1>

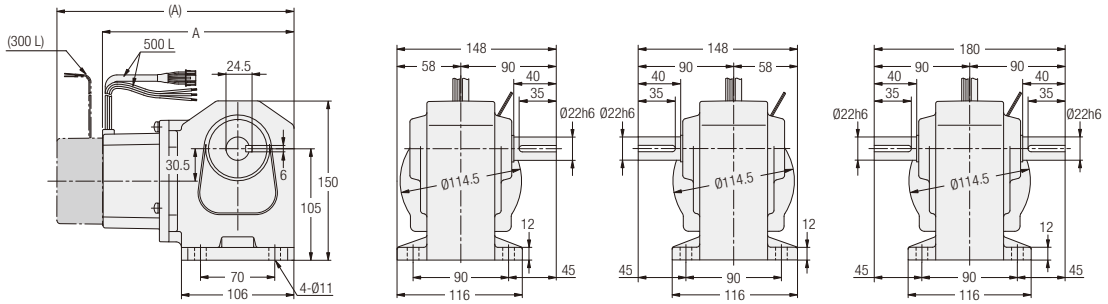

<Figure 2>

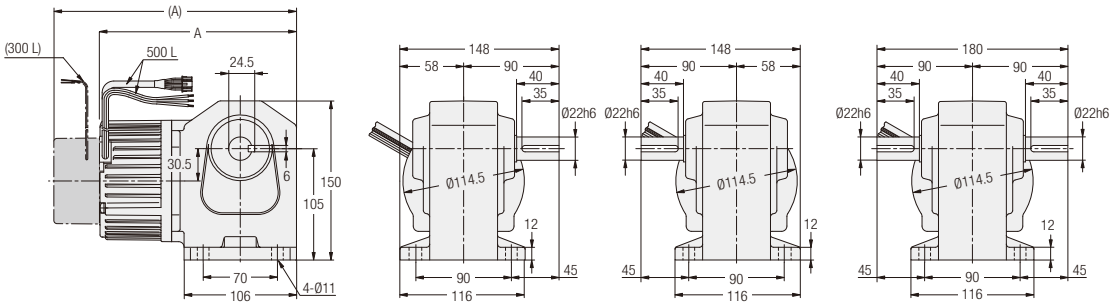

L Shaft R Shaft T Shaft

Power	Voltage	Part Number	Reduction Ratio	Figure Number	Brake	Approx. Weight (kg)	A
0.1 kW	12 VDC	VHLC22#-***N100L1A	80, 100, 120, 160, 200, 240	1	No	4.5	182.5
		VHLD22#-***N100L1A			Yes	5.0	223.5
0.1 kW	24 VDC	VHLC22#-***N100L2A	80, 100, 120, 160, 200, 240	1	No	4.5	182.5
		VHLD22#-***N100L2A			Yes	5.0	223.5
0.1 kW	48 VDC	VHLC22#-***N100L4A	80, 100, 120, 160, 200, 240	1	No	4.5	182.5
		VHLD22#-***N100L4A			Yes	5.0	223.5
0.2 kW	24 VDC	VHLC22#-***N200L2A	5, 10, 15, 20, 25, 30, 40, 50, 60	2	No	5.0	188
		VHLD22#-***N200L2A			Yes	5.5	229.5
0.2 kW	48 VDC	VHLC22#-***N200L4A	5, 10, 15, 20, 25, 30, 40, 50, 60	2	No	5.0	188
		VHLD22#-***N200L4A			Yes	5.5	229.5

Note: A shaft arrangement (L, R, T) will be indicated as # in the nomenclature. A reduction ratio will be indicated as ***.
Note: Please refer to page 678 for the performance table.

VH Type Right Angle Shaft | Shaft Diameter **28** | **Foot** Mounting

The values in parentheses ( ) are the indications for gearmotors with brake.

<Figure 1>

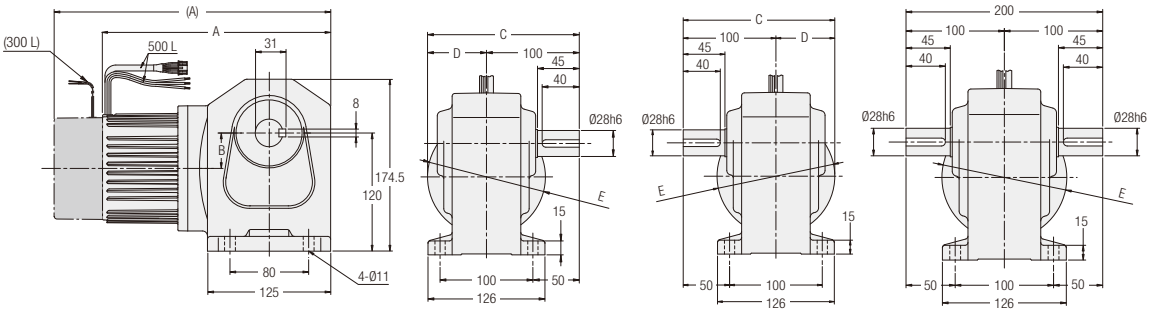

L Shaft R Shaft T Shaft

Power	Voltage	Part Number	Reduction Ratio	Figure Number	Brake	Approx. Weight (kg)	A	B	C	D	E
0.2 kW	24 VDC	VHLC28#-***N200L2A	80, 100, 120, 160, 200, 240	1	No	6.5	200.5	39	163	63	Ø114.5
		VHLD28#-***N200L2A			Yes	7.5	242	39	163	63	Ø114.5
0.2 kW	48 VDC	VHLC28#-***N200L4A	80, 100, 120, 160, 200, 240	1	No	6.5	200.5	39	163	63	Ø114.5
		VHLD28#-***N200L4A			Yes	7.5	242	39	163	63	Ø114.5
0.4 kW	24 VDC	VHLC28#-***N400L2A	5, 10, 15, 20, 25, 30, 40, 50, 60	1	No	8.0	234.5	36	163.5	63.5	Ø127
		VHLD28#-***N400L2A			Yes	8.5	280.5	36	163.5	63.5	Ø127
0.4 kW	48 VDC	VHLC28#-***N400L4A	5, 10, 15, 20, 25, 30, 40, 50, 60	1	No	8.0	234.5	36	163.5	63.5	Ø127
		VHLD28#-***N400L4A			Yes	8.5	280.5	36	163.5	63.5	Ø127

Note: A shaft arrangement (L, R, T) will be indicated as # in the nomenclature. A reduction ratio will be indicated as ***.
Note: Please refer to page 678 for the performance table.

VH Type Right Angle Shaft | Shaft Diameter **32** | **Foot** Mounting

The values in parentheses ( ) are the indications for gearmotors with brake.

<Figure 1>

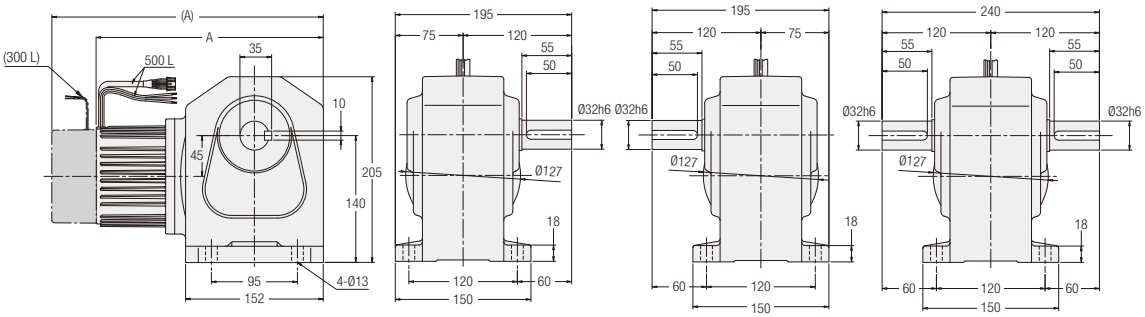

L Shaft R Shaft T Shaft

Power	Voltage	Part Number	Reduction Ratio	Figure Number	Brake	Approx. Weight (kg)	A
0.4 kW	24 VDC	VHLC32#-***N400L2A	80, 100, 120, 160, 200, 240	1	No	11.5	253.5
		VHLD32#-***N400L2A			Yes	12.0	299.5
0.4 kW	48 VDC	VHLC32#-***N400L4A	80, 100, 120, 160, 200, 240	1	No	11.5	253.5
		VHLD32#-***N400L4A			Yes	12.0	299.5

Note: A shaft arrangement (L, R, T) will be indicated as # in the nomenclature. A reduction ratio will be indicated as ***.
Note: Please refer to page 678 for the performance table.

VF3S/ VF3F Type

Concentric Right Angle Hollow Bore/ Concentric Right Angle Shaft

F3S Type

Right Angle Shaft

Model and Type Codes
Standard Model Lineup

P.688 BATTERY POWERED GEARMOTORS
1. Battery Powered Gearmotors
1-1. Performance Tables
1-2. Drawings

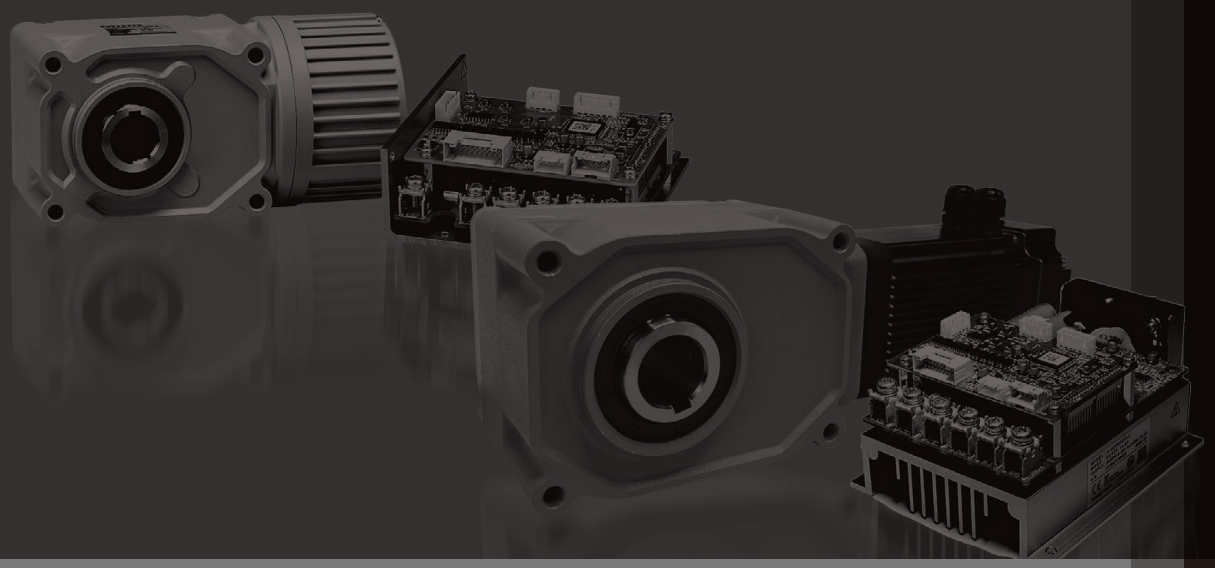

Model and Type Codes

VF Type Battery Powered Gearmotors

Mounting Type	Brake Type	Frame Size	Shaft Arrangement		Reduction Ratio	Common Code	Motor Power	Supply Voltage	Option
VF3S	C	25		–	30	N	200	L2A	
VF3F	D	32	T	–	240	N	400	L4A	
①	②	③	④		⑤	⑥	⑦	⑧	⑨

①Mounting Type	VF3S : Concentric Right Angle Hollow Bore			
	VF3F : Concentric Right Angle Shaft			
②Brake Type	C : No Brake			
	D : Brakemotor			
③Frame Size and Output Shaft Diameter	Output Shaft Diameter (internal diameter for right angle hollow bore types, and outer diameter for other types)			
④Shaft Arrangement	Concentric Right Angle Hollow Bore	Concentric Right Angle Shaft		
	Blank	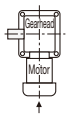 Output shaft on the left side when viewed from the input shaft side (↑)	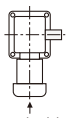 Output shaft on the right side when viewed from the input shaft side (↑)	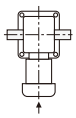 Output shaft on both sides when viewed from the input shaft side (↑)
		L	R	T
⑤Reduction Ratio	5:1/5 to 240:1/240			
⑥Common Code	N : Common Code			
⑦Motor Power	100 : 0.1 kW			
	200 : 0.2 kW			
	400 : 0.4 kW			
⑧Supply Voltage (Note 1)	L1A : 12 VDC			
	L2A : 24 VDC			
	L4A : 48 VDC			
⑨Option	Blank : Standard Specification			
	X : Special Specification Code			

Note 1: 48 VDC is CCC-certified Product.

F3 Type Battery Powered Gearmotors

Mounting Type	Frame Size	Shaft Arrangement	Reduction Ratio		Motor Type	Motor Specifications	Motor Power	Supply Voltage	Standard	Brake Type	Option
F3S	30	N	20	–	SD	M	080	L4	A	N	
①	②	③	④		⑤	⑥	⑦	⑧	⑨	⑩	⑪

①Mounting Type	F3S : Right Angle Shaft Flange mount on both sides	
②Frame Size	Output Shaft Diameter	
③Shaft Arrangement	Material	Shaft Arrangement
		Right Angle Hollow Bore
	Carbon Steel	N
	Stainless Steel	S
④Reduction Ratio	10:1/10 to 60:1/60	
⑤Motor Type	SD : Brushless Motor SD Series	
⑥Motor Specifications	M : IP44	
	W : IP65	
⑦Motor Power	080 : 0.75 kW	
⑧Supply Voltage	L4 : 48 VDC	
⑨Standard	A : CCC	
⑩Brake Type	N : No Brake	
	B : Brakemotor	
⑪Option	Blank : Standard Specification	
	X : Special Specification Code	

Standard Model Lineup

Concentric Right Angle Hollow Bore/VF3S Type Battery Powered Gearmotors

Motor Power	Power Supply Voltage (Volts DC)	Brake Type	Frame Size	Reduction Ratio
0.1 kW	12 V, 24 V, 48 V	C, D	15	1/10, 1/15, 1/20, 1/25, 1/30, 1/40, 1/50, 1/60, 1/80, 1/100, 1/120, 1/160
0.2 kW	24 V, 48 V	C, D	25	1/10, 1/15, 1/20, 1/25, 1/30, 1/40, 1/50, 1/60
			30	1/80, 1/100, 1/120, 1/160, 1/200, 1/240
0.4 kW	24 V, 48 V	C, D	30	1/10, 1/15, 1/20, 1/25, 1/30, 1/40, 1/50, 1/60
			35	1/80, 1/100, 1/120, 1/160, 1/200, 1/240

Right Angle Shaft/F3 Type Battery Powered Gearmotors

Motor Power	Power Supply Voltage (Volts DC)	Brake Type	Motor Specifications	Frame Size	Reduction Ratio
0.75 kW	48 V	N, B	M, W	30	1/10, 1/15, 1/20, 1/25, 1/30, 1/40, 1/50, 1/60

Concentric Right Angle Shaft/VF3F Type Battery Powered Gearmotors

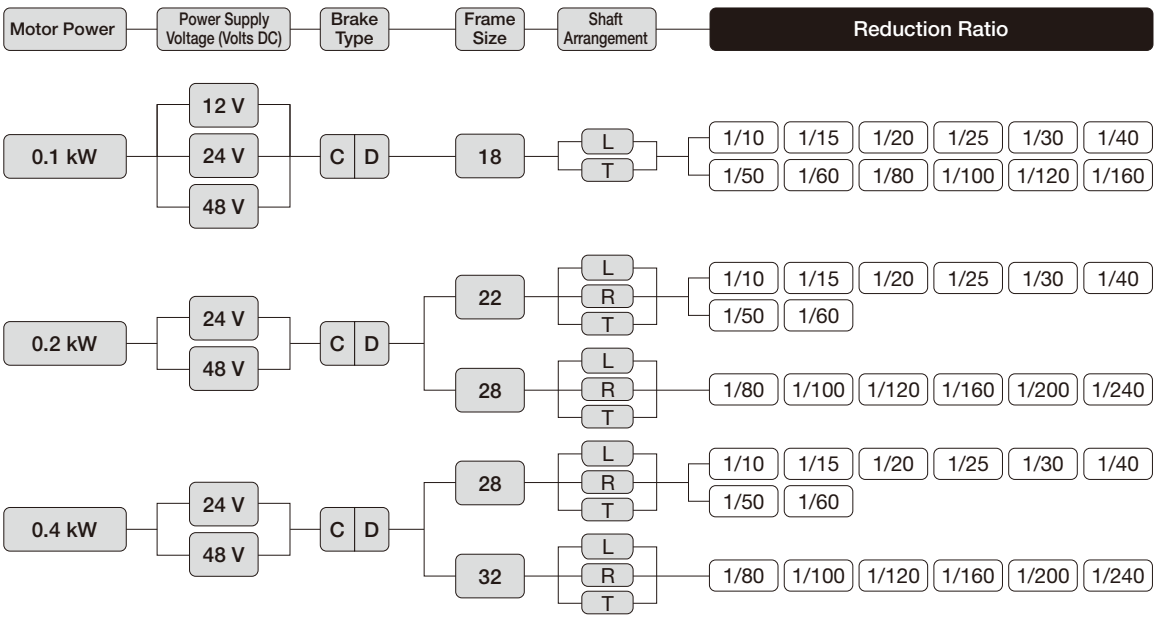

Note 1: Shaft arrangement code “R” is not set for frame size 18.
A gearmotor of shaft arrangement code “L” with the same frame size can be used as an R type by rotating the gearmotor 180 °.

■ Shaft Arrangement of VF3F (Concentric Right Angle Shaft) Frame Size 18

Shaft arrangement code “R shaft” is not available for VF3F (concentric right angle shaft) frame size 18.
The L shaft is the standard shaft for single shaft types.
[Figure-1] The VF3F type is designed for concentric flange mount on both sides, and the output shaft can therefore be positioned on the right side by rotating the gearmotor to 180 °. [Figure-2] In this case, however, the lead wires will be on the upper side.
If you want to set the lead wires on the lower side for convenience of use, it is necessary to change the lead wires to the upper side with the L shaft in the state as shown in [Figure-1]. In this case, use option “TZ” when placing an order.

<Figure when viewed from the motor side>

When the output shaft is an L shaft, it is on the left side when viewed from the motor side with the lead wires on the lower side.

[Figure-1] [Figure-2]

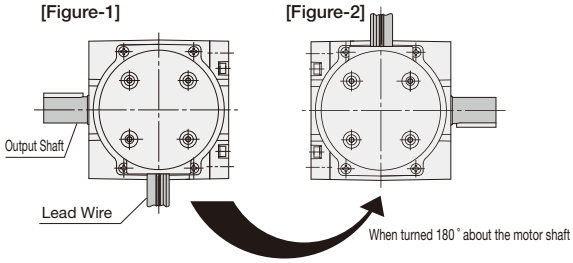

1. Battery Powered Gearmotors

1-1. Performance Tables

Concentric Right Angle Hollow Bore/VF3S Type Battery Powered Gearmotors

[Notes]

- The values in parentheses ( ) in the drawings are the indications for gearmotors with brake.
- ▭ in the performance table indicates that the shaft rotates clockwise with a drive CW command when viewed from the output shaft side under the conditions shown in the figure on the right.
- Change the signal from the drive to CCW in order to change the rotational direction.
- The performance table shows two reduction ratios: reduction ratio and actual reduction ratio.
- The key dimensions and tolerances for output shafts conform to the normal type specified in JIS B 1301-1996.
- The output shaft key is not included.
- Allowable output shaft O.H.L. is the value at the middle of the output shaft. For other cases, see page 741.
- The output shaft speed is the variable speed range shown (100 to 3000r/min) calculated from the actual reduction ratio.

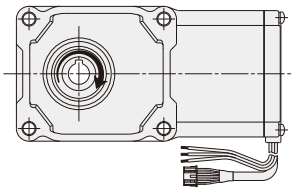

Series	Motor Power	Power Supply	Frame Size	Nominal Reduction Ratio	Actual Reduction Ratio	Output Shaft Speed	Allowable Output Shaft Torque (Continuous)	Allowable Output Shaft O.H.L.	Allowable Output Shaft Thrust Load	Drawings
		V				r/min	N·m	N	N	
V	0.1 kW	12 VDC 24 VDC 48 VDC	15	1/10	4/41	9.8 to 292	2.45	340	108	P.691
				1/15	8/123	6.6 to 195	4.51	440	147	
				1/20	2/41	4.9 to 146	6.37	540	186	
				1/25	8/205	4.0 to 117	8.33	640	226	
				1/30	4/123	3.3 to 97	9.80	740	245	
				1/40	1/41	2.5 to 73	12.7	830	275	
				1/50	4/205	2.0 to 58	16.7	930	294	
				1/60	2/123	1.7 to 48	19.6	930	294	
				1/80	1/82	1.3 to 36	25.5	1030	324	
				1/100	2/205	1.0 to 29	32.3	1030	324	
				1/120	1/123	0.9 to 24	39.2	1030	343	
				1/160	1/164	0.7 to 18	51.9	1030	343	
	0.2 kW	24 VDC 48 VDC	25	1/10	1/10	10.0 to 300	4.90	1520	380	P.691
				1/15	1/15	6.7 to 200	8.33	1720	429	
				1/20	1/20	5.0 to 150	11.8	1860	466	
				1/25	19/470	4.1 to 121	14.7	2010	502	
				1/30	1/30	3.4 to 100	18.6	2110	527	
				1/40	1/40	2.5 to 75	24.5	2300	576	
				1/50	1/50	2.0 to 60	30.4	2450	613	
				1/60	1/60	1.7 to 50	35.3	2550	637	
			30	1/80	1/80	1.3 to 37	47.0	3090	775	P.692
				1/100	19/1880	1.1 to 30	58.8	3140	785	
				1/120	1/120	0.9 to 25	70.6	3140	785	
				1/160	1/160	0.7 to 18	94.1	3140	785	
				1/200	1/200	0.5 to 15	118	3140	785	
				1/240	1/240	0.5 to 12	137	3140	785	
	0.4 kW	24 VDC 48 VDC	30	1/10	1/10	10.0 to 300	9.40	1910	475	P.692
				1/15	1/15	6.7 to 200	15.6	2160	539	
				1/20	1/20	5.0 to 150	20.5	2400	600	
				1/25	19/470	4.1 to 121	27.4	2550	637	
				1/30	1/30	3.4 to 100	33.3	2650	662	
				1/40	1/40	2.5 to 75	44.1	2840	711	
				1/50	1/50	2.0 to 60	53.9	2990	747	
				1/60	1/60	1.7 to 50	64.6	3090	767	
			35	1/80	1/80	1.3 to 37	88.2	3480	873	P.693
				1/100	19/1880	1.1 to 30	108	3530	883	
				1/120	1/120	0.9 to 25	127	3530	883	
				1/160	1/160	0.7 to 18	176	3630	912	
				1/200	1/200	0.5 to 15	225	3630	912	
				1/240	1/240	0.5 to 12	270	3630	912	

Concentric Right Angle Shaft/VF3F Type Battery Powered Gearmotors

[Notes]

- ▭ in the performance table indicates that the L shaft rotates clockwise with a drive CW command and the R and T shafts rotate counterclockwise when viewed from the output shaft side under the conditions shown in the right figure.
- Change the signal from the drive to CCW in order to change the rotational direction.
- The performance table shows two reduction ratios: reduction ratio and actual reduction ratio.
- The key dimensions and tolerances for output shafts conform to the normal type specified in JIS B 1301-1996.
- Allowable output shaft O.H.L. is the value at the middle of the output shaft. For other cases, see page 741.
- The output shaft speed is the variable speed range shown on page 711 calculated from the actual reduction ratio.

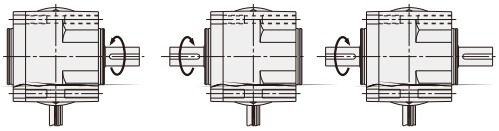

L Shaft R Shaft T Shaft

Series	Motor Power	Power Supply	Frame Size	Nominal Reduction Ratio	Actual Reduction Ratio	Output Shaft Speed	Allowable Output Shaft Torque (Continuous)	Allowable Output Shaft O.H.L.	Drawings
		V				r/min	N·m	N	
V	0.1 kW	12 VDC 24 VDC 48 VDC	18	1/10	4/41	9.8 to 292	2.45	340	P.694
				1/15	8/123	6.6 to 195	4.51	440	
				1/20	2/41	4.9 to 146	6.37	540	
				1/25	8/205	4.0 to 117	8.33	640	
				1/30	4/123	3.3 to 97	9.80	740	
				1/40	1/41	2.5 to 73	12.7	830	
				1/50	4/205	2.0 to 58	16.7	930	
				1/60	2/123	1.7 to 48	19.6	930	
				1/80	1/82	1.3 to 36	25.5	1030	
				1/100	2/205	1.0 to 29	32.3	1030	
				1/120	1/123	0.9 to 24	39.2	1030	
				1/160	1/164	0.7 to 18	51.9	1030	
	0.2 kW	24 VDC 48 VDC	22	1/10	1/10	10.0 to 300	4.90	1520	P.695
				1/15	1/15	6.7 to 200	8.33	1720	
				1/20	1/20	5.0 to 150	11.8	1910	
				1/25	19/470	4.1 to 121	14.7	2060	
				1/30	1/30	3.4 to 100	18.6	2160	
				1/40	1/40	2.5 to 75	24.5	2400	
				1/50	1/50	2.0 to 60	30.4	2550	
				1/60	1/60	1.7 to 50	35.3	2550	
			28	1/80	1/80	1.3 to 37	47.0	3090	P.696
				1/100	19/1880	1.1 to 30	58.8	3140	
				1/120	1/120	0.9 to 25	70.6	3140	
				1/160	1/160	0.7 to 18	94.1	3140	
				1/200	1/200	0.5 to 15	118	3140	
				1/240	1/240	0.5 to 12	137	3140	
	0.4 kW	24 VDC 48 VDC	28	1/10	1/10	10.0 to 300	9.4	1810	P.696
				1/15	1/15	6.7 to 200	15.6	2060	
				1/20	1/20	5.0 to 150	20.5	2300	
				1/25	19/470	4.1 to 121	27.4	2450	
				1/30	1/30	3.4 to 100	33.3	2600	
				1/40	1/40	2.5 to 75	44.1	2790	
				1/50	1/50	2.0 to 60	53.9	2990	
				1/60	1/60	1.7 to 50	64.6	3090	
			32	1/80	1/80	1.3 to 37	88.2	3330	P.697
				1/100	19/1880	1.1 to 30	108	3380	
				1/120	1/120	0.9 to 25	127	3380	
				1/160	1/160	0.7 to 18	176	3580	
				1/200	1/200	0.5 to 15	225	3630	
				1/240	1/240	0.5 to 12	270	3630	

Right Angle Shaft/F3 Type Battery Powered Gearmotors

[Notes]

- The allowable output shaft O.H.L. is the value at the load point of the O.H.L. shown on page 741.
- The output shaft rotates clockwise with a drive CW command when viewed from the output shaft side under the conditions shown in the figure on the right.
- The key dimensions and tolerances for output shafts conform to the normal type specified in JIS B 1301-1996.
- Adjust the speed control proportional gain so that the inertial load on the output shaft side does not vibrate during acceleration and deceleration.
- The output shaft key is not included.
- It is a time rated product. Refer to page 706.

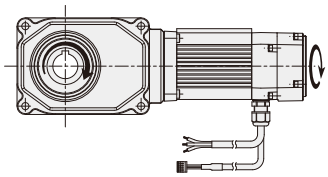

Series	Motor Power	Power Supply	Frame Size	Reduction Ratio	Output Shaft Speed	Allowable Output Shaft Torque	Allowable Output Shaft O.H.L.	Allowable Output Shaft Thrust Load	Drawings
		V			r/min	N·m	N	N	
SD	0.75 kW	48 VDC	30	1/10	8.0 to 400	21.5	1910	475	P.698
				1/15	5.5 to 270	32.2	2160	539	
				1/20	4.0 to 200	43.0	2400	600	
				1/25	3.2 to 160	53.7	2550	637	
				1/30	2.7 to 130	64.5	2650	662	P.698
				1/40	2.0 to 100	85.9	2840	711	
				1/50	1.6 to 80	107.4	2990	747	
				1/60	1.3 to 67	128.9	3090	767	

1-2. Drawings

VF3S Type Concentric Right Angle Hollow Bore | Shaft Diameter **15** | **Flange** Mounting

The values in parentheses ( ) are the indications for gearmotors with brake.

<Figure 1>

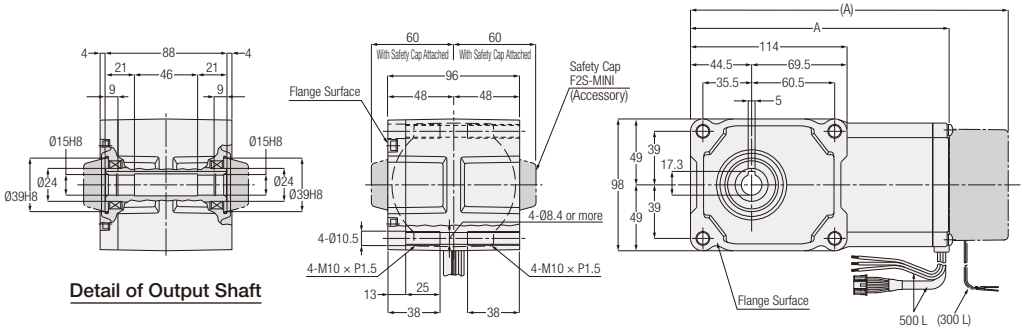

Power	Voltage	Part Number	Reduction Ratio	Figure Number	Brake	Approx. Weight (kg)	A
0.1 kW	12 VDC	VF3SC15-∗∗∗N100L1A	10, 15, 20, 25, 30, 40, 50, 60, 80, 100, 120, 160	1	No	3.5	190.5
		VF3SD15-∗∗∗N100L1A			Yes	4.0	231.5
0.1 kW	24 VDC	VF3SC15-∗∗∗N100L2A	10, 15, 20, 25, 30, 40, 50, 60, 80, 100, 120, 160	1	No	3.5	190.5
		VF3SD15-∗∗∗N100L2A			Yes	4.0	231.5
0.1 kW	48 VDC	VF3SC15-∗∗∗N100L4A	10, 15, 20, 25, 30, 40, 50, 60, 80, 100, 120, 160	1	No	3.5	190.5
		VF3SD15-∗∗∗N100L4A			Yes	4.0	231.5

Note: A reduction ratio will be indicated as ∗∗∗ in the nomenclature.
Note: Please refer to page 688 for the performance table.

VF3S Type Concentric Right Angle Hollow Bore | Shaft Diameter **25** | **Flange** Mounting

<Figure 2>

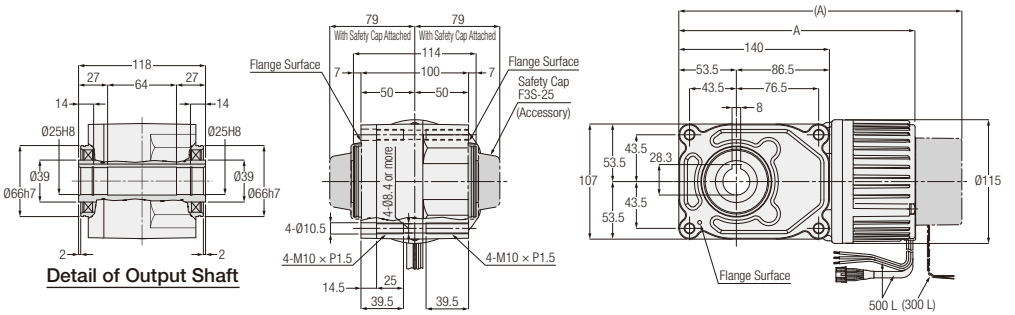

Power	Voltage	Part Number	Reduction Ratio	Figure Number	Brake	Approx. Weight (kg)	A
0.2 kW	24 VDC	VF3SC25-∗∗∗N200L2A	10, 15, 20, 25, 30, 40, 50, 60	2	No	6.0	222.5
		VF3SD25-∗∗∗N200L2A			Yes	6.5	264
0.2 kW	48 VDC	VF3SC25-∗∗∗N200L4A	10, 15, 20, 25, 30, 40, 50, 60	2	No	6.0	222.5
		VF3SD25-∗∗∗N200L4A			Yes	6.5	264

Note: A reduction ratio will be indicated as ∗∗∗ in the nomenclature.
Note: Please refer to page 688 for the performance table.

VF3S Type Concentric Right Angle Hollow Bore | Shaft Diameter 30 | **Flange** Mounting

The values in parentheses ( ) are the indications for gearmotors with brake.

<Figure 1>

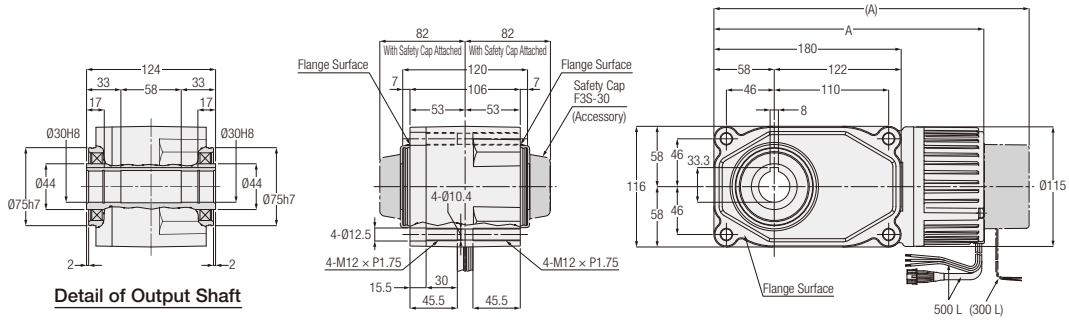

<Figure 2>

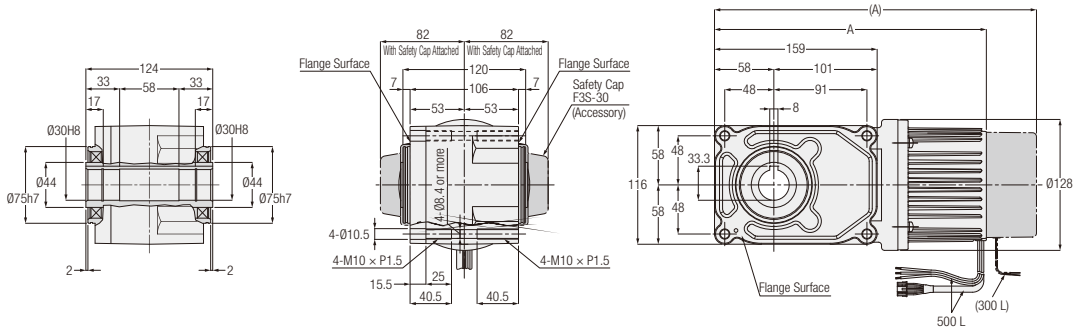

Power	Voltage	Part Number	Reduction Ratio	Figure Number	Brake	Approx. Weight (kg)	A
0.2 kW	24 VDC	VF3SC30-***N200L2A	80, 100, 120, 160, 200, 240	1	No	7.5	262
		VF3SD30-***N200L2A			Yes	8.0	303.5
0.2 kW	48 VDC	VF3SC30-***N200L4A	80, 100, 120, 160, 200, 240	1	No	7.5	262
		VF3SD30-***N200L4A			Yes	8.0	303.5
0.4 kW	24 VDC	VF3SC30-***N400L2A	10, 15, 20, 25, 30, 40, 50, 60	2	No	8.5	269
		VF3SD30-***N400L2A			Yes	9.0	315
0.4 kW	48 VDC	VF3SC30-***N400L4A	10, 15, 20, 25, 30, 40, 50, 60	2	No	8.5	269
		VF3SD30-***N400L4A			Yes	9.0	315

Note: A reduction ratio will be indicated as *** in the nomenclature.
Note: Please refer to page 688 for the performance table.

VF3S Type Concentric Right Angle Hollow Bore | Shaft Diameter 35 | **Flange** Mounting

The values in parentheses ( ) are the indications for gearmotors with brake.

<Figure 1>

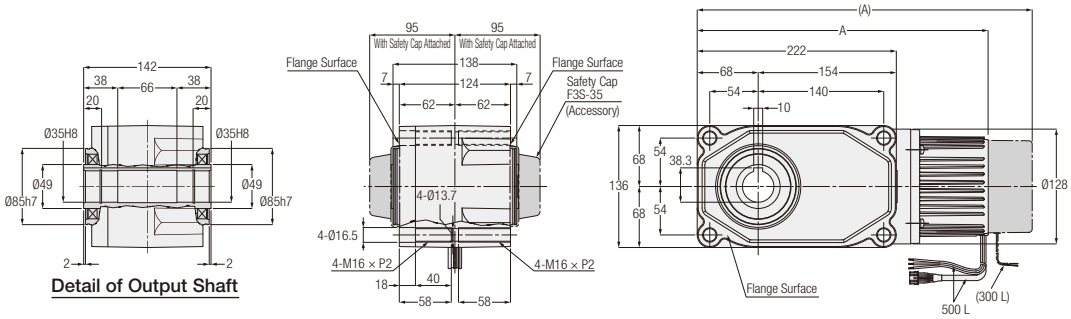

Power	Voltage	Part Number	Reduction Ratio	Figure Number	Brake	Approx. Weight (kg)	A
0.4 kW	24 VDC	VF3SC35-∗∗∗N400L2A	80, 100, 120, 160, 200, 240	1	No	12.0	327.5
		VF3SD35-∗∗∗N400L2A			Yes	12.5	373.5
0.4 kW	48 VDC	VF3SC35-∗∗∗N400L4A	80, 100, 120, 160, 200, 240	1	No	12.0	327.5
		VF3SD35-∗∗∗N400L4A			Yes	12.5	373.5

Note: A reduction ratio will be indicated as ∗∗∗ in the nomenclature.
Note: Please refer to page 688 for the performance table.

VF3F Type Concentric Right Angle Shaft | Shaft Diameter 18 | **Flange** Mounting

The values in parentheses ( ) are the indications for gearmotors with brake.

<Figure 1>

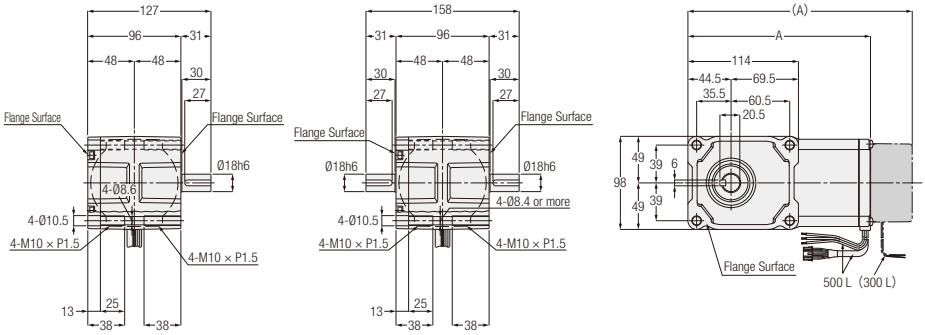

L Shaft T Shaft

Power	Voltage	Part Number	Reduction Ratio	Figure Number	Brake	Approx. Weight (kg)	A
0.1 kW	12 VDC	VF3FC18#-∗∗∗N100L1A	10, 15, 20, 25, 30, 40, 50, 60, 80, 100, 120, 160	1	No	3.5	190.5
		VF3FD18#-∗∗∗N100L1A			Yes	4.0	231.5
0.1 kW	24 VDC	VF3FC18#-∗∗∗N100L2A	10, 15, 20, 25, 30, 40, 50, 60, 80, 100, 120, 160	1	No	3.5	190.5
		VF3FD18#-∗∗∗N100L2A			Yes	4.0	231.5
0.1 kW	48 VDC	VF3FC18#-∗∗∗N100L4A	10, 15, 20, 25, 30, 40, 50, 60, 80, 100, 120, 160	1	No	3.5	190.5
		VF3FD18#-∗∗∗N100L4A			Yes	4.0	231.5

Note: A shaft arrangement code (L, T) will be indicated as # in the nomenclature. A reduction ratio will be indicated as ∗∗∗.
Note: Please refer to page 689 for the performance table.

■ Shaft Arrangement of VF3F (Concentric Right Angle Shaft) Frame Size 18

Shaft arrangement code “R shaft” is not available for VF3F (concentric right angle shaft) frame size 18.
The L shaft is the standard shaft for single shaft types.
[Figure-1] The VF3F type is designed for concentric flange mount on both sides, and the output shaft can therefore be positioned on the right side by rotating the gearmotor to 180 °. [Figure-2] In this case, however, the lead wires will be on the upper side.
If you want to set the lead wires on the lower side for convenience of use, it is necessary to change the lead wires to the upper side with the L shaft in the state as shown in [Figure-1]. In this case, use option “TZ” when placing an order.

<Figure when viewed from the motor side>

When the output shaft is an L shaft, it is on the left side when viewed from the motor side with the lead wires on the lower side.

[Figure-1] [Figure-2]

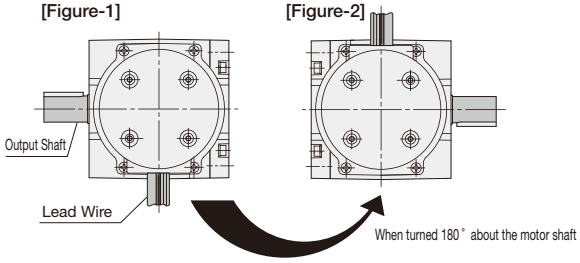

VF3F Type Concentric Right Angle Shaft | Shaft Diameter 22 | Flange Mounting

The values in parentheses ( ) are the indications for gearmotors with brake.

<Figure 1>

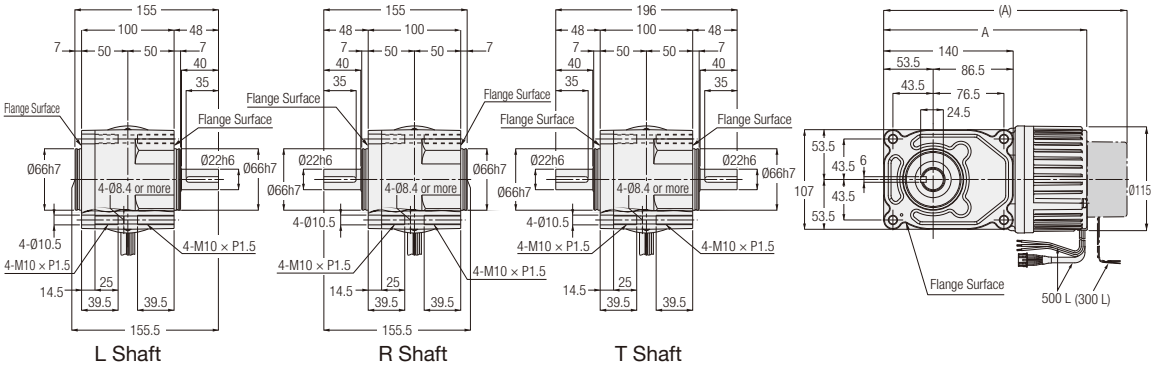

Power	Voltage	Part Number	Reduction Ratio	Figure Number	Brake	Approx. Weight (kg)	A
0.2 kW	24 VDC	VF3FC22#-∗∗∗N200L2A	10, 15, 20, 25, 30, 40, 50, 60	1	No	7.0	222.5
		VF3FD22#-∗∗∗N200L2A			Yes	7.5	263.5
0.2 kW	48 VDC	VF3FC22#-∗∗∗N200L4A	10, 15, 20, 25, 30, 40, 50, 60	1	No	7.0	222.5
		VF3FD22#-∗∗∗N200L4A			Yes	7.5	263.5

Note: A shaft arrangement (L, R, T) will be indicated as # in the nomenclature. A reduction ratio will be indicated as ∗∗∗.
Note: Please refer to page 689 for the performance table.

VF3F Type Concentric Right Angle Shaft | Shaft Diameter 28 | **Flange** Mounting

The values in parentheses ( ) are the indications for gearmotors with brake.

<Figure 1>

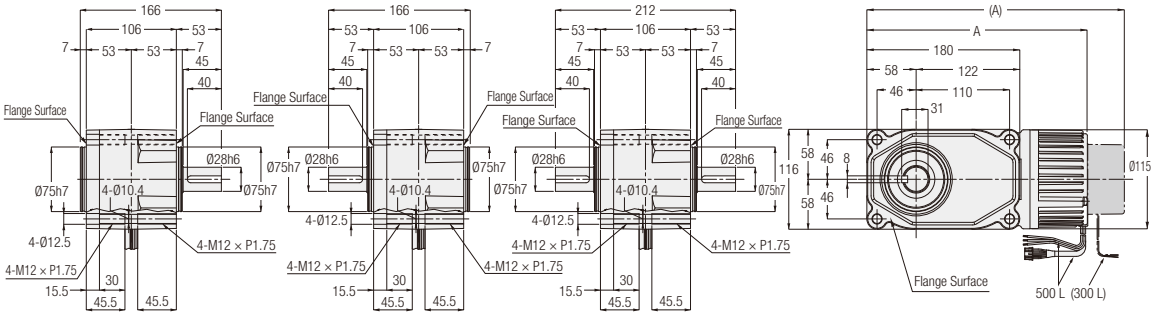

<Figure 2>

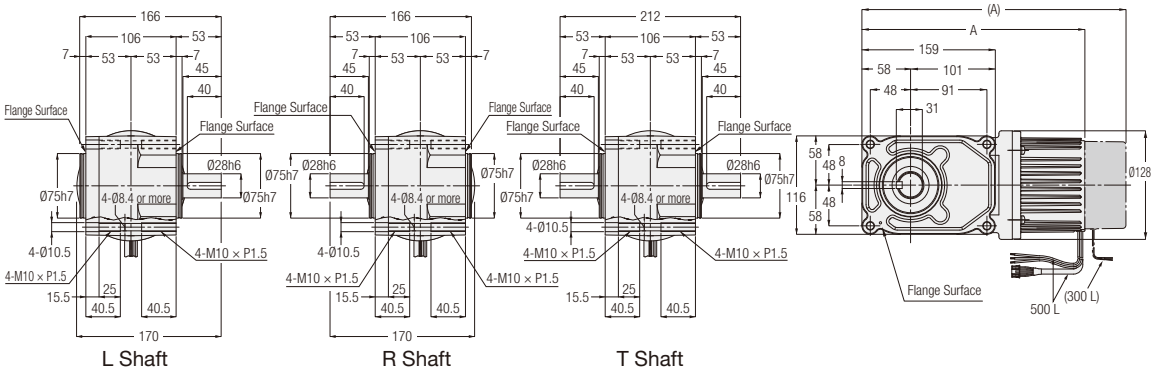

Power	Voltage	Part Number	Reduction Ratio	Figure Number	Brake	Approx. Weight (kg)	A
0.2 kW	24 VDC	VF3FC28#-∗∗∗N200L2A	80, 100, 120, 160, 200, 240	1	No	8.5	262
		VF3FD28#-∗∗∗N200L2A			Yes	9.0	303
0.2 kW	48 VDC	VF3FC28#-∗∗∗N200L4A	80, 100, 120, 160, 200, 240	1	No	8.5	262
		VF3FD28#-∗∗∗N200L4A			Yes	9.0	303
0.4 kW	24 VDC	VF3FC28#-∗∗∗N400L2A	10, 15, 20, 25, 30, 40, 50, 60	2	No	9.5	269
		VF3FD28#-∗∗∗N400L2A			Yes	10.0	315
0.4 kW	48 VDC	VF3FC28#-∗∗∗N400L4A	10, 15, 20, 25, 30, 40, 50, 60	2	No	9.5	269
		VF3FD28#-∗∗∗N400L4A			Yes	10.0	315

Note: A shaft arrangement (L, R, T) will be indicated as # in the nomenclature. A reduction ratio will be indicated as ∗∗∗.
Note: Please refer to page 689 for the performance table.

VF3F Type Concentric Right Angle Shaft | Shaft Diameter 32 | Flange Mounting

The values in parentheses ( ) are the indications for gearmotors with brake.

<Figure 1>

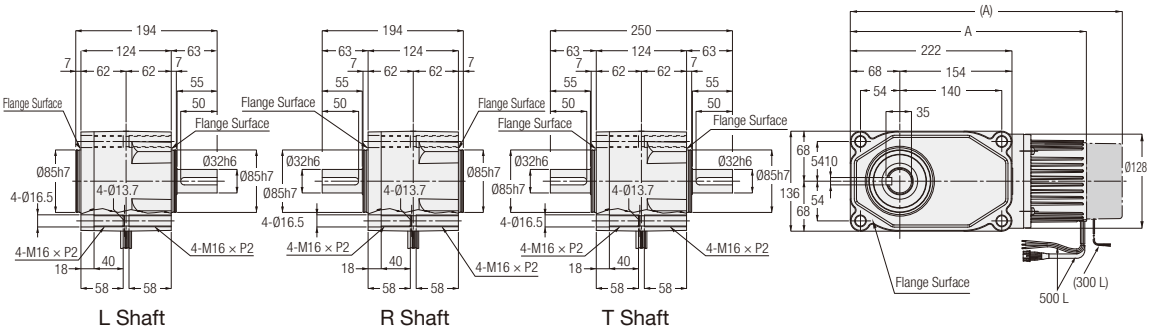

Power	Voltage	Part Number	Reduction Ratio	Figure Number	Brake	Approx. Weight (kg)	A
0.4 kW	24 VDC	VF3FC32#-∗∗∗N400L2A	80, 100, 120, 160, 200, 240	1	No	13.5	327.5
		VF3FD32#-∗∗∗N400L2A			Yes	14.0	373.5
0.4 kW	48 VDC	VF3FC32#-∗∗∗N400L4A	80, 100, 120, 160, 200, 240	1	No	13.5	327.5
		VF3FD32#-∗∗∗N400L4A			Yes	14.0	373.5

Note: A shaft arrangement (L, R, T) will be indicated as # in the nomenclature. A reduction ratio will be indicated as ∗∗∗.
Note: Please refer to page 689 for the performance table.

F3 Type Right Angle Shaft | Shaft Diameter 30 | **Flange** Mounting

<Figure 1>

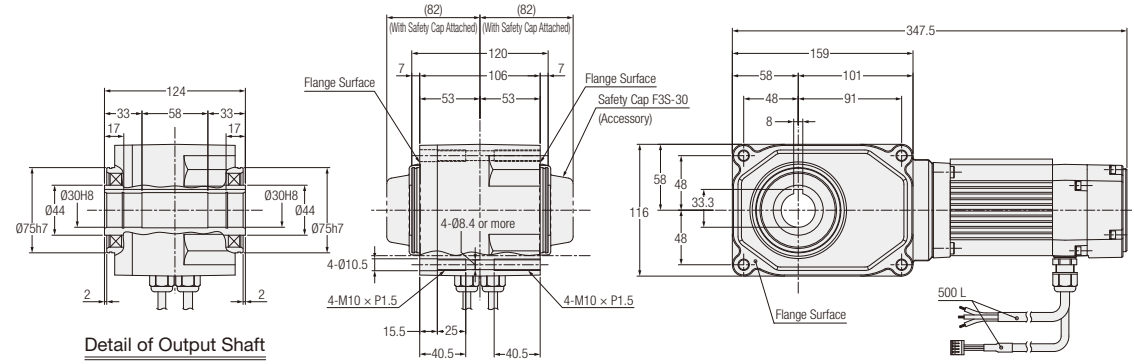

<Figure 2>

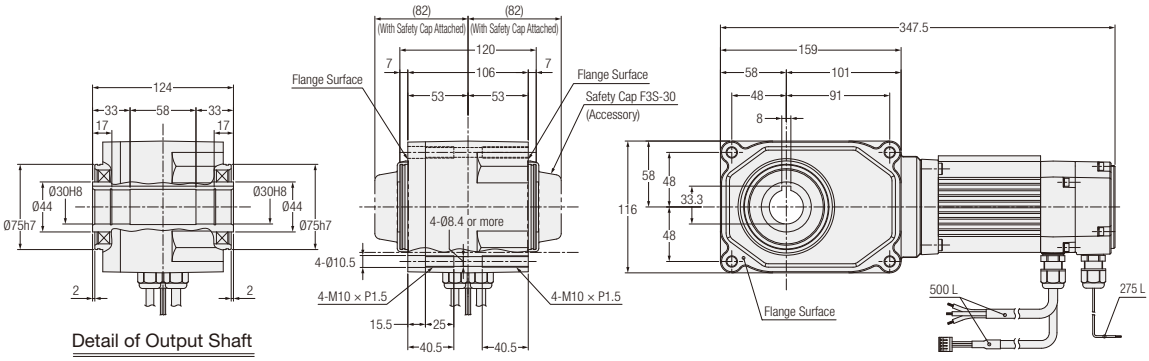

Power	Supply Voltage	Frame Size	Part Number	Reduction Ratio	Motor Specifications	Figure Number	Brake	Approx. Weight (kg)
0.75 kW	48 VDC	30	F3S30N***-SDM080L4AN	10, 15, 20, 25, 30, 40, 50, 60	IP44	1	No	8.1
			F3S30N***-SDM080L4AB			2	Yes	8.5
			F3S30S***-SDW080L4AN		IP65	1	No	8.1
			F3S30S***-SDW080L4AB			2	Yes	8.5

Note: A reduction ratio will be indicated as *** in the nomenclature.
Note: Please refer to page 690 for the performance table.
Note: It is a time rated product. Refer to page 706.

Control Unit Specification

BATTERY POWERED GEARMOTORS

P.700 Gearmotor Specifications and Electromagnetic Brake Specifications

P.702 Gearmotors Characteristics and Specifications

P.707 Dedicated Drive (Sold Separately)

P.711 Control Unit Specification

P.712 Wiring Diagrams

P.718 Explanation of Terminals

P.719 I/O Terminal Wiring

P.723 Parameter List

P.728 Safeguard Function List

P.729 Connection Method and Installation

P.731 Precautions for Installation

P.732 Accessories

P.733 Options

Gearmotor Specifications and Electromagnetic Brake Specifications

Motor Specifications

Series	V									SD	
Power	50 W		0.1 kW			0.2 kW		0.4 kW		0.75 kW	
Voltage (V)	12	24	12	24	48	24	48	24	48	48	
Rated Current (A)	5.9	2.7	12.4	5.8	2.7	9.8	5.1	20.1	9.9	19.5	
Time Rating	S1 (Continuous)									S3 25 %	
Motor Lead Wire (mm^2)	0.9(AWG18)		2(AWG14)							2(AWG15)	
Maximum Extension Length (m)	5									5	
Frequency of Startup/ Stop	30 times/min (when using our drive)									—	
Application Ambient Temperature (°C)	0 °C to 40 °C									0 °C to 40 °C	
Application Ambient Humidity (%RH)	IP30		85 % RH max (No Condensation)							IP40/ IP44	85 % RH max (No Condensation)
										IP65	100 % RH max (No Condensation)
Storage Ambient Temperature (°C)	-10 °C to 60 °C (Not to freeze)									-10 °C to 60 °C (Not to freeze)	
Storage Ambient Humidity (% RH)	85 % RH max (No Condensation)									IP40/ IP44	85 % RH max (No Condensation)
										IP65	100 % RH max (No Condensation)
Vibration Resistance	0.5 G or less									0.2 G or less	
Altitude	1,000 m max									1,000 m max	
Installation Environment	A place free from corrosive gas and/or explosive gas. Well ventilated place with no dust.									IP40/ IP44	A place free from corrosive gas, explosive gas, and/or vapor. Well ventilated place with no dust.
										IP65	A place free from corrosive gas, explosive gas, and/or vapor. Not to be used underwater or in places where high water pressure is applied.
Installation Place	Indoors									IP40/ IP44	Indoors
										IP65	Indoors/Outdoors

Note: The rated current value shown in the table above is a reference value for a motor without a gearhead (motor alone).
For gearmotors, refer to the load co-efficient current characteristics on pages 702 to 706.

Electromagnetic Brake Specifications

Series	V									SD
Power	50 W		0.1 kW			0.2 kW		0.4 kW		0.75 kW
Brake Type	Power-Off (Spring Close)									
Holding Torque (N·m) (motor shaft)	0.20		0.57			0.95		1.76		3.0
Excitation Voltage (V) (±10 %)	12	24	12	24	48	24	48	24	48	48
Current Consumption (A) (20 °C)	0.44	0.25	0.65	0.36	0.17	0.58	0.28	0.58	0.31	0.21
Power Consumption (W) (20 °C)	5.3	6.0	7.8	8.6	8.3	13.9	13.2	13.9	15.1	10.0
Lead Wire (mm^2)	0.5 (AWG20)									0.3 (AWG22)

Note: The electro-magnetic brake is for holding. It cannot be used for braking.
Note: In order to protect the equipment from surges voltage when the electromagnetic brake is turned ON or OFF, use the supplied varistor (82 V, 1J or above) or supplied diode (100 V, 1A or above).
Note: Due to the structure of the brake, the disc produces friction noise during motor operation. However, this does not affect the performance of the brake.

Nameplate

V Series

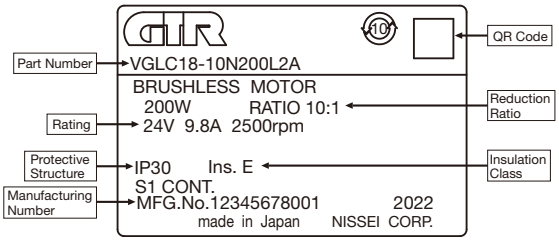

SD Series

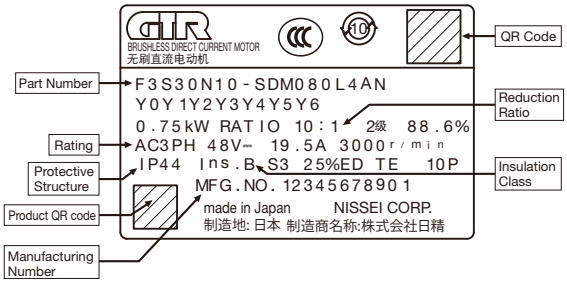

Electromagnetic Brake V Series

■ Structure

<50 W>

❶Field
❷Hex Head Cap Screw
❸Friction Disk Assembly
❹Hexagon Socket Set Screw
❺Brake Cover
❻Armature
❼Spring
❽Brake Cover Fixing Screw
g: Gap

Note: The brake is a holding brake. In normal use, the gap does not need to be adjusted. However, if the brake is repeatedly used for emergency stops, the friction disc may get worn and the gap may become wider. If the gap has become wider, it may prevent the brake from releasing. In this case, please adjust the gap.
Suitable gap g = 0.2±0.1

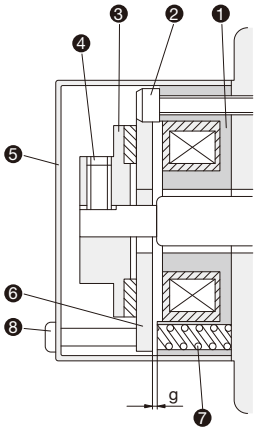

<0.1 kW, 0.2 kW, 0.4 kW>

❶Field
❷Armature
❸Outer Disk
❹Spring 1
❺Spring 2
❻Shake-proof Washer Nut
❼Key
❽Hex Head Cap Screw
❾Brake Cover
❿Brake Cover Fixing Screw
g: Gap

Note: The brake is a holding brake. In normal use, the gap does not need to be adjusted. However, if the brake is repeatedly used for emergency stops, the friction disc may get worn and the gap may become wider. If the gap has become wider, it may prevent the brake from releasing. In this case, please adjust the gap.
Suitable gap g = 0.4±0.1

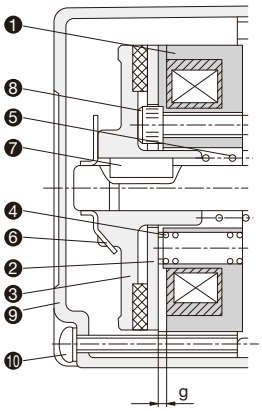

Gearmotors Characteristics and Specifications

Gearmotors Characteristics

V Series

Note: These characteristics are representative of gearmotors. Customer can refer to this graph when using their own drives.

[Notes]

Below graphs explain relation between load co-efficient with rotational speed (motor shaft) as well of current.

The rating range defined by speed from 100 to 2500 r/min with 100 % load co-efficient.

Guidelines for use (with cold starts) at time ratings (5 minutes, 30 minutes) are also shown. However, please check the actual rating range with an actual unit.

1. The speed in the graphs below corresponds to the speed of the motor shaft. Consider the gear ratio when calculating the output shaft speed.
2. In the graphs below, 100 % corresponds to the allowable output shaft torque shown in the performance tables.
3. If a gearmotor is used outside the rating range, the life of the gearmotor may become shorter or problem may arise with the electro-magnetic brake. For details, please contact us.
4. Please make sure to maintain the surface temperature of the motor below 90 °C.

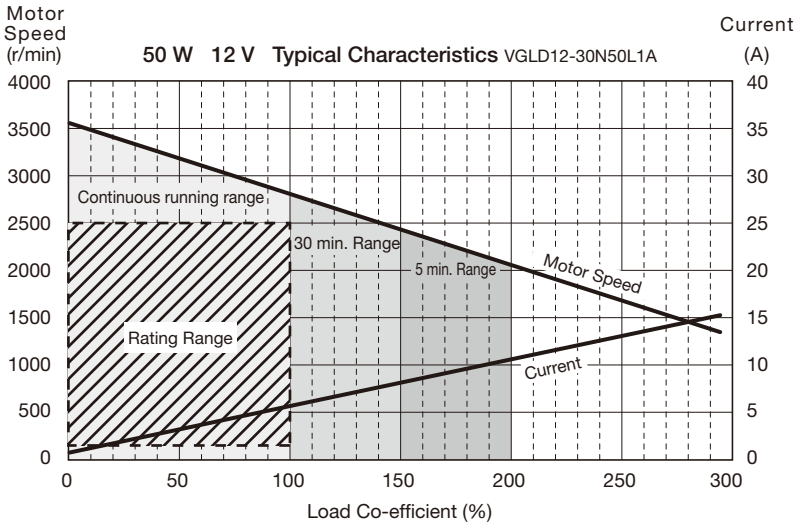

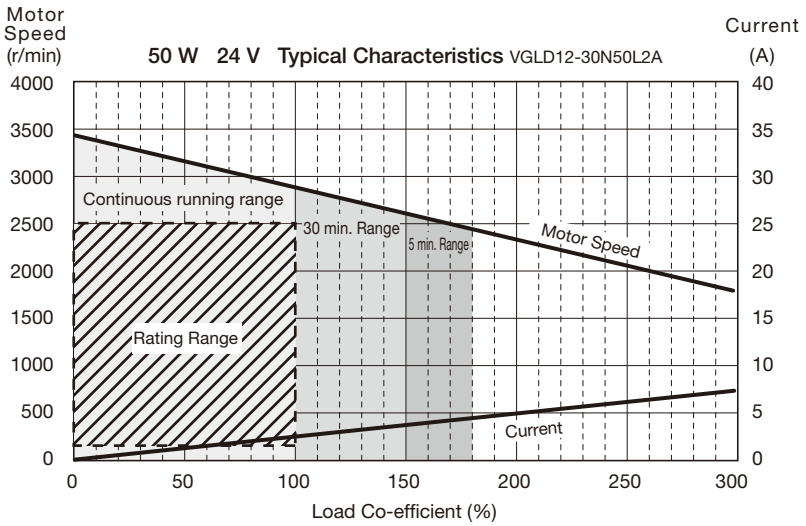

Gearmotors Characteristics and Specifications

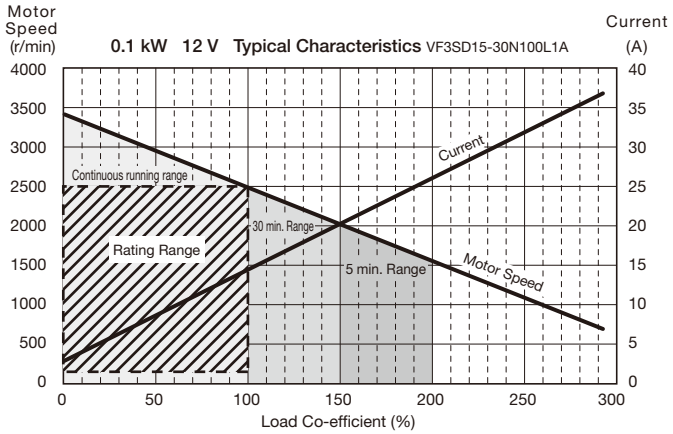

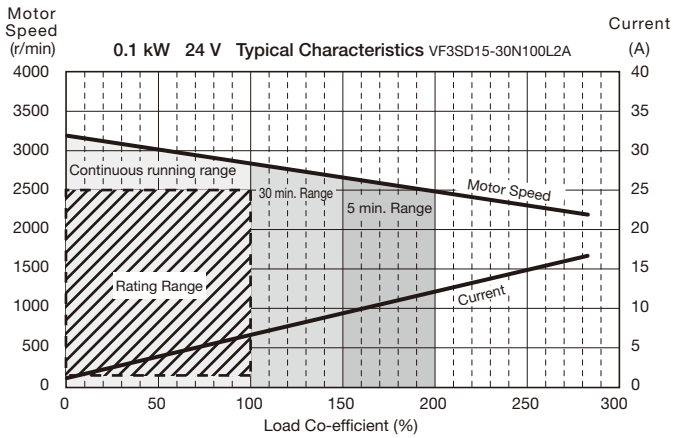

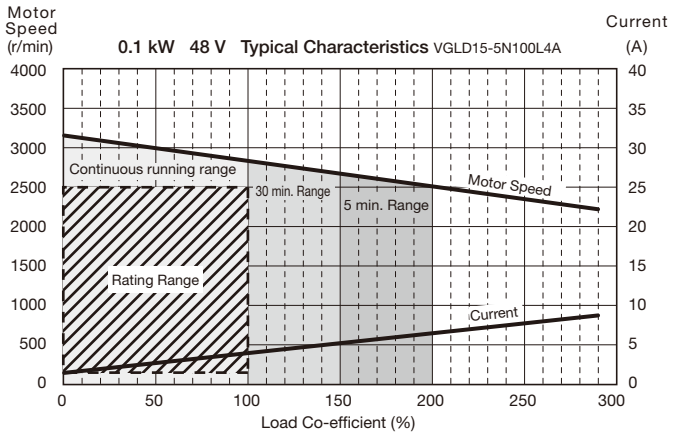

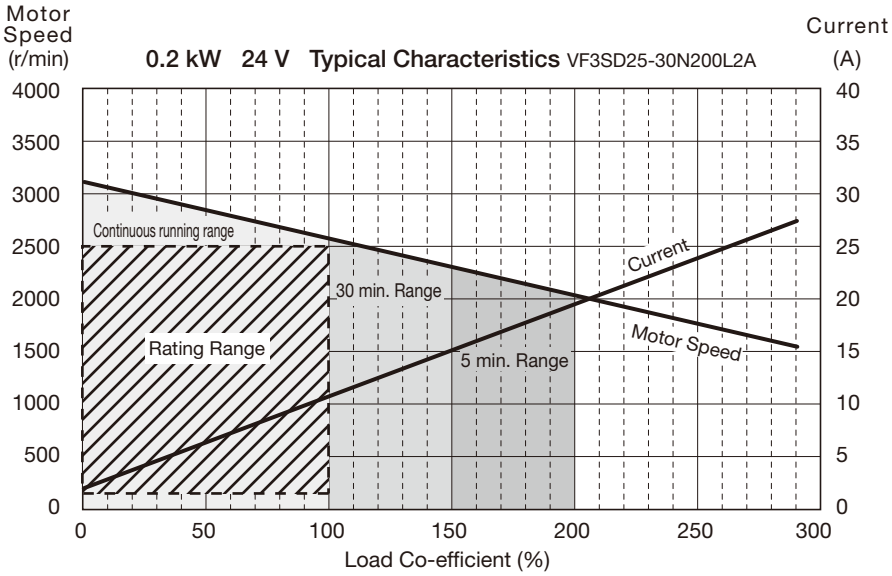
Motor Speed (r/min)
0.2 kW 24 V Typical Characteristics VF3SD25-30N200L2A
Current (A)
4000
3500
3000
2500
2000
1500
1000
500
0
40
35
30
25
20
15
10
5
0
Continuous running range
30 min. Range
Rating Range
5 min. Range
Current
Motor Speed
0
50
100
150
200
250
300
Load Co-efficient (%)

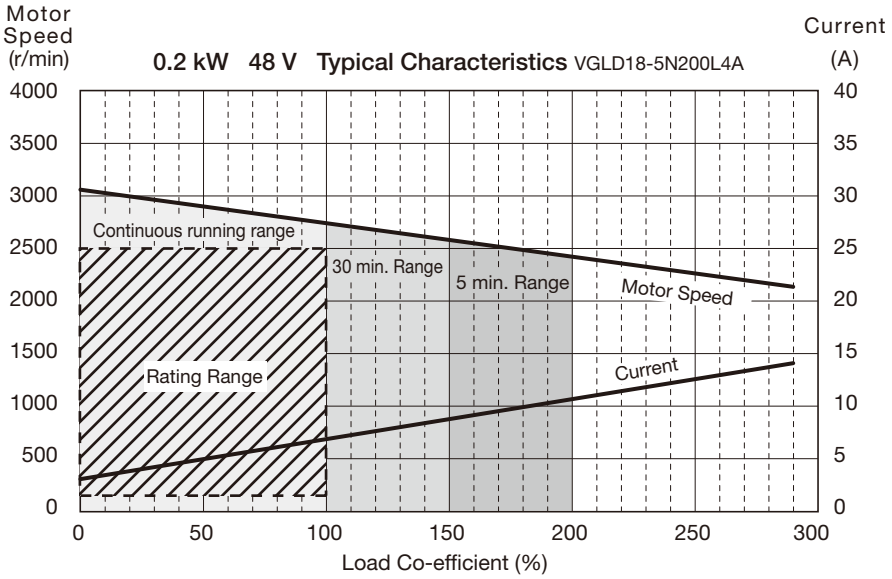
Motor Speed (r/min)
0.2 kW 48 V Typical Characteristics VGLD18-5N200L4A
Current (A)
4000
3500
3000
2500
2000
1500
1000
500
0
40
35
30
25
20
15
10
5
0
Continuous running range
30 min. Range
5 min. Range
Motor Speed
Rating Range
Current
0
50
100
150
200
250
300
Load Co-efficient (%)

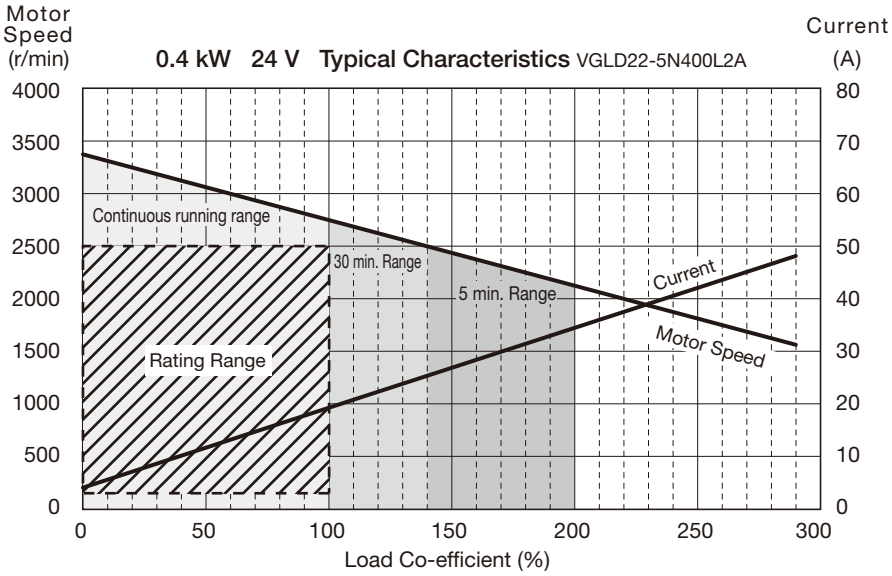
Motor Speed (r/min)
0.4 kW 24 V Typical Characteristics VGLD22-5N400L2A
Current (A)
4000
3500
3000
2500
2000
1500
1000
500
0
80
70
60
50
40
30
20
10
0
Continuous running range
30 min. Range
5 min. Range
Rating Range
Current
Motor Speed
0
50
100
150
200
250
300
Load Co-efficient (%)

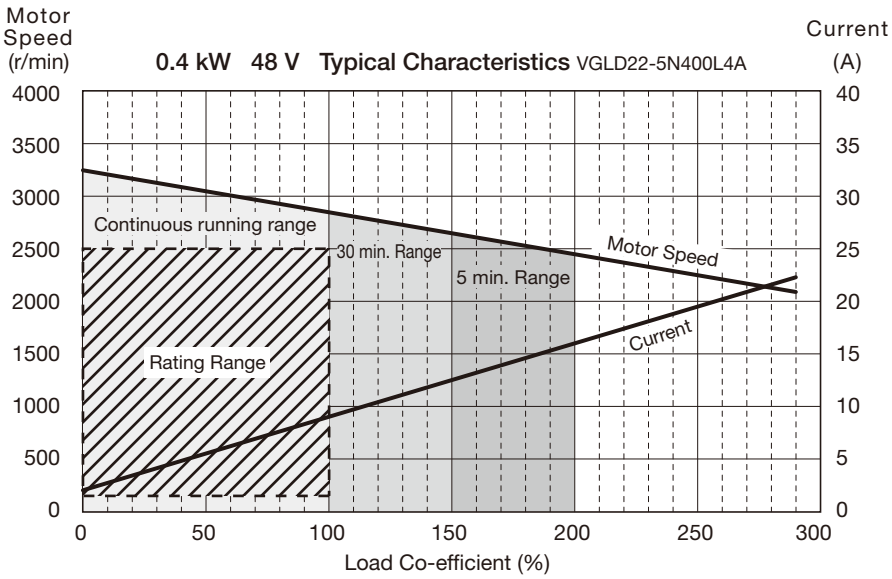
Motor Speed (r/min)
0.4 kW 48 V Typical Characteristics VGLD22-5N400L4A
Current (A)
4000
3500
3000
2500
2000
1500
1000
500
0
40
35
30
25
20
15
10
5
0
Continuous running range
30 min. Range
5 min. Range
Rating Range
Motor Speed
Current
0
50
100
150
200
250
300
Load Co-efficient (%)

SD Series

Note: These characteristics are representative characteristics of gearmotors Refer to these graphs if the customer wishes to design a drive of their own.

[Notes]

Below graphs explain relation between load co-efficient with rotational speed (motor shaft) as well of current.

The rating range defined by speed from 80 to 3000 r/min with 100 % load co-efficient.

Guidelines for use (with cold starts) at time ratings (5 minutes, 30 minutes) are also shown. However, please check the actual rating range with an actual unit.

1. The speed in the graphs below corresponds to the speed of the motor shaft. Consider the gear ratio when calculating the output shaft speed.
2. In the graphs below, 100 % corresponds to the allowable output shaft torque shown in the performance tables.
3. If a gearmotor is used outside the rating range, the life of the gearmotor may become shorter or problem may arise with the electro-magnetic brake. For details, please contact us.
4. Take care to keep the surface temperature of the motor below 90 °C.

0.75 kW 48 V Typical Characteristics

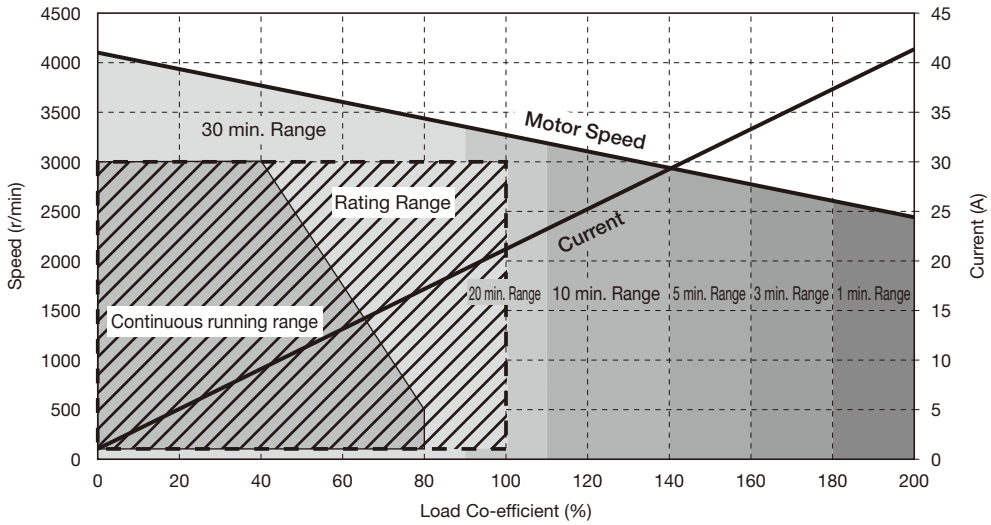

The rating class of this product is the intermittent periodic rating (S3 25 %).

The intermittent periodic rating (S3) is the specification of repeating a cycle consisting of an operation period under a constant load and a deactivation period with no voltage applied.

The duty factor of this product is 25 %.

$$\text{Duty Factor} = \frac{\Delta t_P}{\Delta t_P + \Delta t_R} \times 100$$

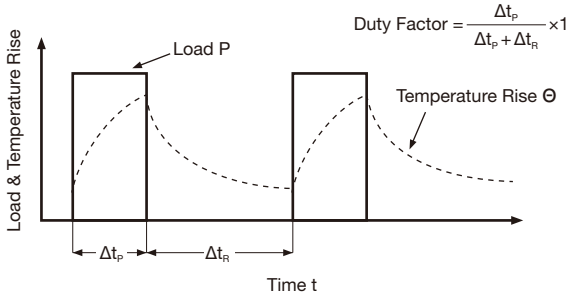

Dedicated Drives (Sold Separately)

Type Code

Series		Motor Type	Brake Type	Power	Supply Voltage	Option
A	–	BL	CD	010	L2	X
A	–	SD	NB	080	L4	X
①		②	③	④	⑤	⑥

①Series	A	:GTR-AR
②Motor Type	BL	: Brushless Motor V Series
	SD	: Brushless Motor SD Series
③Brake Type	CD	: V Series common to gearmotors with a brake and gearmotors without a brake
	NB	: SD Series common to gearmotors with a brake and gearmotors without a brake
④Power	005	: 50 W
	010	: 0.1 kW
	020	: 0.2 kW
	040	: 0.4 kW
	080	: 0.75 kW
⑤Supply Voltage	L1	: 12 V
	L2	: 24 V
	L4	: 48 V
⑥Option	Blank	: Standard Specification
	X	: Special Specification Code

Model Lineup

The combinations of supply voltages and powers are as follows:

		Supply Voltage		
Series	Power	12 V	24 V	48 V
V	50 W	A-BLCD005L1	A-BLCD005L2	—
	0.1 kW	A-BLCD010L1	A-BLCD010L2	A-BLCD010L4
	0.2 kW	—	A-BLCD020L2	A-BLCD020L4
	0.4 kW	—	A-BLCD040L2	A-BLCD040L4
SD	0.75 kW	—	—	A-SDNB080L4

Nameplate

V Series

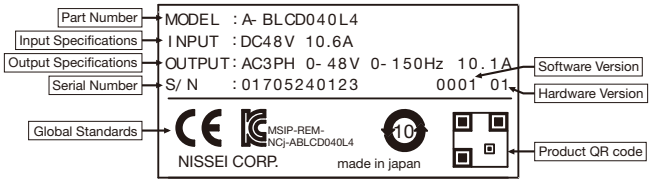

SD Series

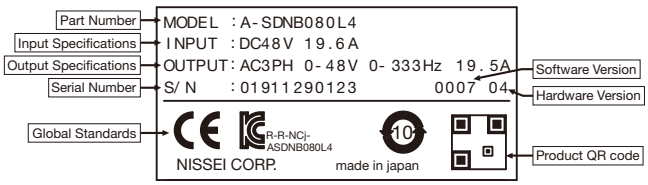

Dimension Diagrams

<Figure 1>

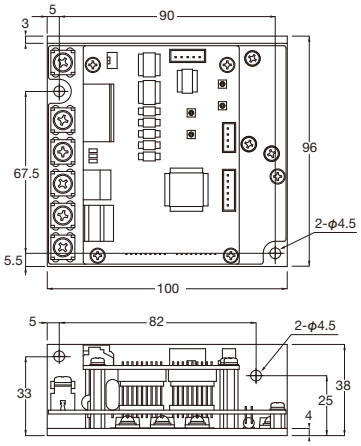

<Figure 2>

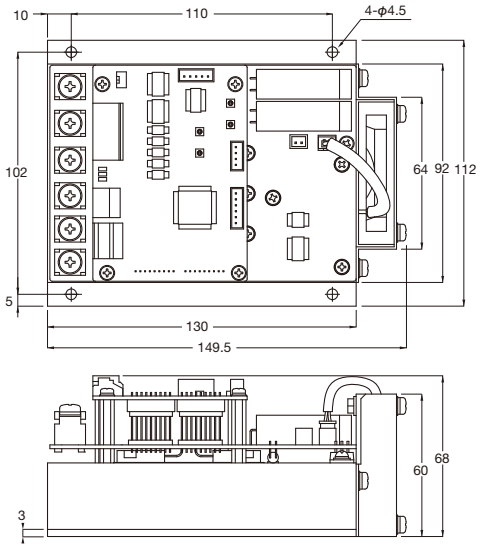

Series	Power	Voltage	Part Number	Figure Number	Approx. Weight (kg)
V	50 W	12 VDC	A-BLCD005L1	1	0.29
		24 VDC	A-BLCD005L2	1	0.29
	0.1 kW	12 VDC	A-BLCD010L1	1	0.29
		24 VDC	A-BLCD010L2	1	0.29
		48 VDC	A-BLCD010L4	1	0.29
	0.2 kW	24 VDC	A-BLCD020L2	1	0.29
		48 VDC	A-BLCD020L4	1	0.29
	0.4 kW	24 VDC	A-BLCD040L2	2	0.73
		48 VDC	A-BLCD040L4	1	0.29
SD	0.75 kW	48 VDC	A-SDNB080L4	2	0.73

Names of Parts

A-BLCD005L1 / A-BLCD005L2 / A-BLCD010L1 / A-BLCD010L2 / A-BLCD010L4 /A-BLCD020L2 / A-BLCD020L4 / A-BLCD040L4

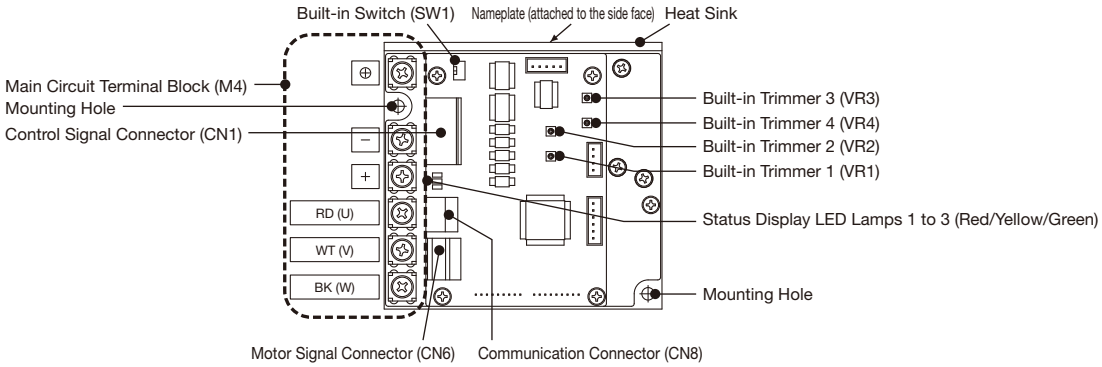

A-BLCD040L2 / A-SDNB080L4

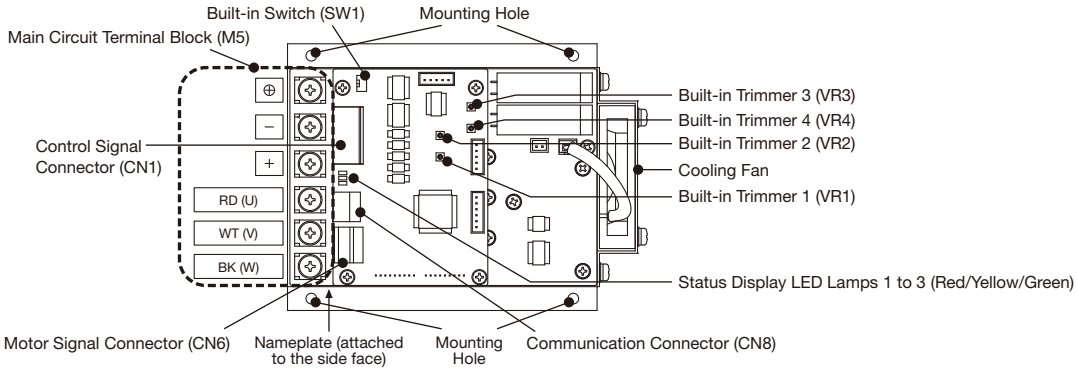

Built-in Switch

When inputting a control signal, choose to use the built-in power supply (+15 V) of the drive or an external power supply.

Code	Setting	Description	
SW1	In case of using an external power supply (Default)	The gearmotor will be disconnected from the built-in power supply of the drive.	
	In case of using the built-in power supply	V Series	IN-COM (CN1-1) will be shorted with GND inside the drive. A voltage of 15 V will be applied to each of the input terminals I1 to I8.
		SD Series	A voltage of 15 V will be applied to each of the input terminals I1 to I8.

Note: For the internal circuit, refer to page 719.

■ Built-in Switch Setting

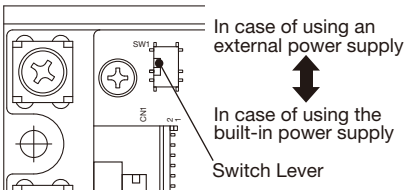

Status Display LED Lamps

This function displays the status of the drive with LED lamps. The LED lamps light up according to the specifications described below.

Code	Color	Specification
LED1	Red	This LED lamp lights up when an alarm occurs.
LED2	Yellow	This LED lamp lights up during overload operation (operation above the rated current of the motor) and goes off when the overload state is cleared. In addition it goes off where as there is a overload alarm.
LED3	Green	This LED lamp lights up when the control power supply is turned on. It also lights up or blinks when an alarm occurs. The number of blinks indicates the type of alarm.

■ LED Lamp Layout

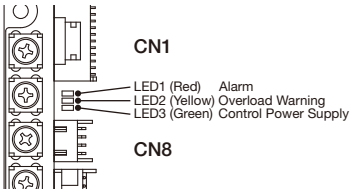

Built-in Trimmer

The drive is provided with four built-in trimmers. The following settings can be made by adjusting the trimmers.

Code	Function Name	Description	Default
VR1	Built-in Trimmer 1 (Speed Setting Device)	The command speed increases by turning the trimmer clockwise. (Note 1) The setting ranges are as follows: V Series: 0 to 3000 r/min SD Series: 0 to 4000 r/min The maximum value of the speed setting by the trimmer can be changed with Pn040. (Note 2)	Clockwise MAX
VR2	Built-in Trimmer 2 (Acceleration/Deceleration Time Setting Device)	The acceleration/deceleration time increases by turning the trimmer clockwise. Setting Range: 0.00 to 5.00 s The standard speed of the acceleration/deceleration time setting by the trimmer can be changed with Pn025. The default values of the standard speed are as follows: V Series: 2500 r/min SD Series: 3000 r/min	Counterclockwise MAX
VR3	Built-in Trimmer 3 (Torque Limit Setting Device)	The torque limit value increases by turning the trimmer clockwise. Setting Range: 0 to 200 %	Clockwise MAX
VR4	Built-in Trimmer 4	Not used	—

Note 1: The function of built-in trimmer 1 is disabled upon shipment. To enable built-in trimmer 1, change the user parameter (Pn000) to “4.” The default setting is set to an external analog command.
Note 2: The speed can be set to up to 5000 r/min with the trimmer, but the speeds at which motors can rotate are as follows:
V Series: Up to 3000 r/min
SD Series: Up to 4000 r/min

■ Rotational Directions of Trimmers

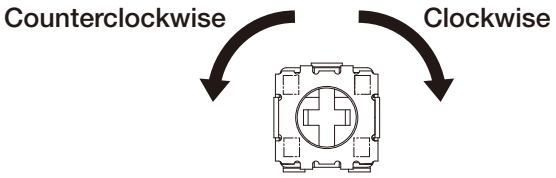

Control Unit Specification

Series			V				SD
Applicable Motor Power			50 W	0.1 kW	0.2 kW	0.4 kW	0.75 kW
Output Current (Rated/Maximum)		12 V	5.9 A/11.8 A	12.4 A/24.8 A	—	—	—
		24 V	2.7 A/5.4 A	5.8 A/11.6 A	9.8 A/19.6 A	20.1 A/40.2 A	—
		48 V	—	2.7 A/5.4 A	5.1 A/10.2 A	9.9 A/19.8 A	19.5 A/39 A
Input Supply Power (Rated Current/ Maximum Current)		12 V	6.4 A/15.4 A	13.1 A/31.4 A	—	—	—
		24 V	3.4 A/8.2 A	6.1 A/14.6 A	10.9 A/26.2 A	23.1 A/55.4 A	—
		48 V	—	3.0 A/7.2 A	5.4 A/13.0 A	10.6 A/25.4 A	19.6 A/52.3 A
Main Circuit/Control Circuit Input Voltage Range			For 12 V: 10 to 15 VDC For 24 V: 20 to 30 VDC For 48 V: 40 to 60 VDC				
Rated Speed			2500 r/min				3000 r/min
Function	Control	Variable Speed Range	100 to 3000 r/min				80 to 4000 r/min
		Speed Command Method	External analog command, PWM speed command, pulse frequency speed command, built-in trimmer 1, speed commands 1 to 8				
		Acceleration/ Deceleration Time	Built-in trimmer 2, acceleration times 1 and 2, deceleration times 1 and 2				Built-in trimmer 2, acceleration times 1 and 2, deceleration times 1 and 2, external analog command
		Torque Limit	External analog command, built-in trimmer 3, torque limit values 1 to 4				
	Input	Number of input points	Sequence Input: 8 points Analog Input: 1 point				
		Input Function	CW, CCW, speed command selection, acceleration/deceleration time selection, torque limit value selection, alarm reset/emergency stop, brake control signal forced ON command, DC lock, load inertia switch, PWM speed command, pulse frequency speed command				
	Output	Number of output points	Sequence Output: 4 points Analog Output: 1 point				
		Output Function	Abnormality detection, operation, rotation pulse, CW rotation pulse, CCW rotation pulse, rotational direction, rotating, over rated torque, over designated torque, brake control signal, voltage drop warning (Note 2)				
	Safeguard Function		Overload, over-voltage, voltage drop, drive overheat, over-speed, overcurrent, sensor error, system error				
Environment	Application Ambient Temperature		–10 °C to 50 °C				
	Storage Ambient Temperature		–25 °C to 70 °C				
	Application Ambient Humidity		95 %RH max (No condensation)				
	Altitude		1,000 m max				
	Vibration		2.0 G or less				
Global Standards Conformance			CE Marking (EMC Command), KC Mark				
Protective Structure			IP00				
RoHS Directive			Conformance				
Motor-Drive Wiring Length			Maximum Extension Length: 5 m				

Note 1: Regenerative energy will be fed to the power supply unit through this drive.
Note 2: 18 pulses will be output for 50 W to 0.4 kW and 30 pulses will be output for 0.75 kW per motor rotation. The ON time is fixed to 240 [μs].

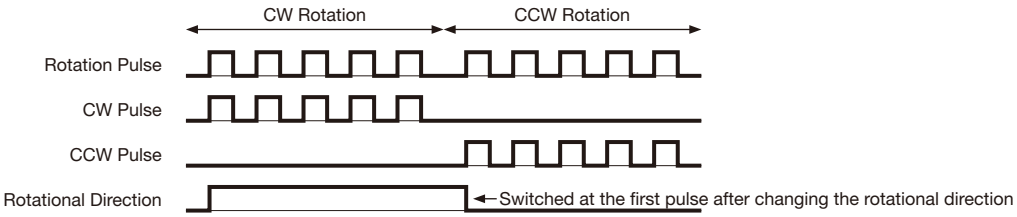

***About pulse waveform**

The specification of the output pulse is as shown in the right figure.
Select a counter according to the specification.

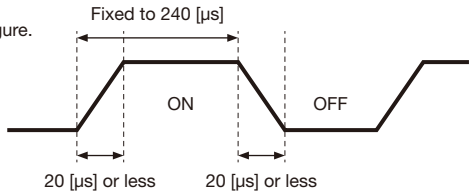

Note: The duty ratio differs depending on the frequency.

Wiring Diagrams

V Series: 50 W to 0.4 kW

■ Sink Connection Example (When Using an External Power Supply)

When using an external power supply, set the built-in switch (SW1) of the drive as shown in the figure on the right.

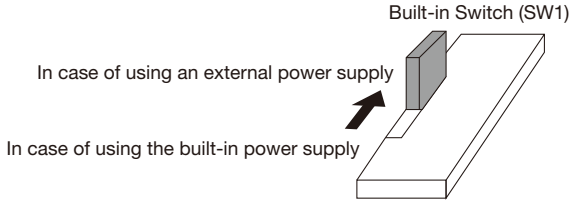

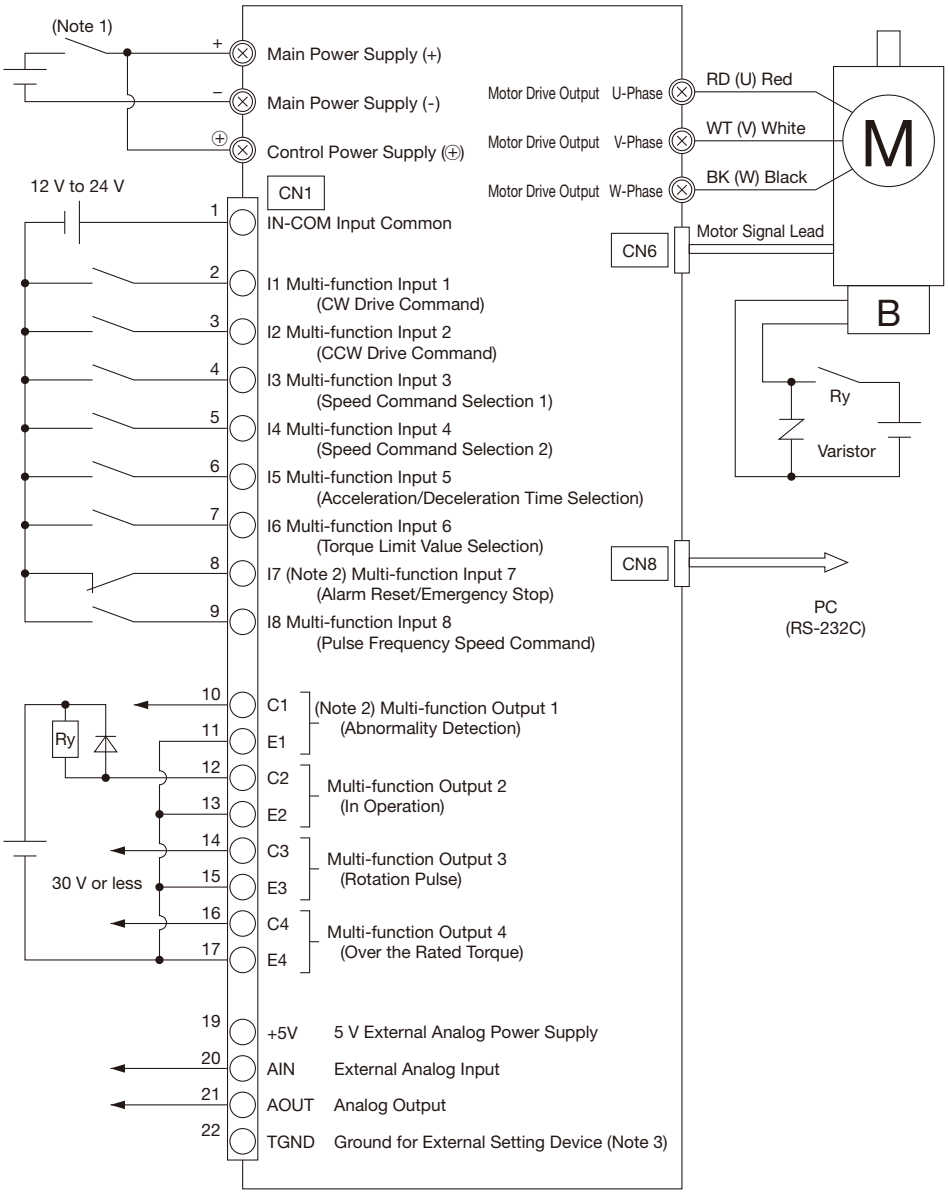

Note 1: During regenerative operation, such as lifting operation or deceleration, do not disconnect the motor from the battery in a state where the main power supply (+) and the control power supply (⊕) are connected.
Use a one-pole type switch when turning the power supply ON/OFF.The drive may be damaged if a double pole type switch is used.
Note 2: For safety reasons, the polarity is reversed under the default settings.
Note 3: Draw the reference analog voltage from the main power supply (-) terminal.

V Series: 50 W to 0.4 kW

■ Source Connection Example (When Using an External Power Supply)

When using an external power supply, set the built-in switch (SW1) of the drive as shown in the figure on the right.

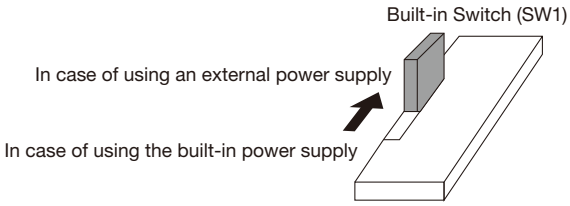

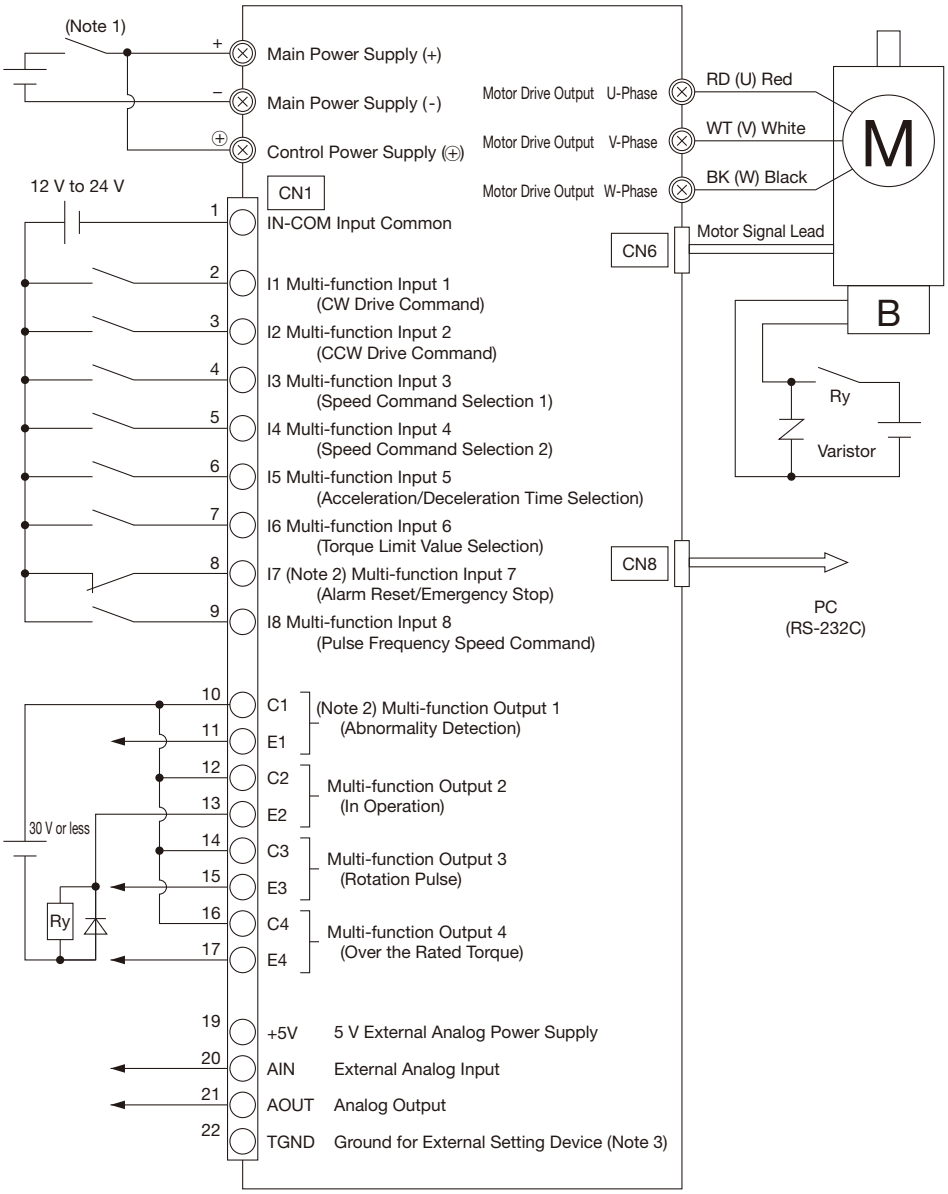

Note 1: During regenerative operation, such as lifting operation or deceleration, do not disconnect the motor from the battery in a state where the main power supply (+) and the control power supply (⊕) are connected.
Use a one-pole type switch when turning the power supply ON/OFF.The drive may be damaged if a double pole type switch is used.
Note 2: For safety reasons, the polarity is reversed under the default settings.
Note 3: Draw the reference analog voltage from the main power supply (-) terminal.

V Series: 50 W to 0.4 kW

■ Sink Connection Example (When Using the Built-in Power Supply)

When using the built-in power supply, set the built-in switch (SW1) of the drive as shown in the figure on the right.

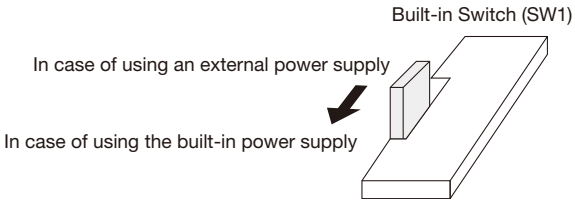

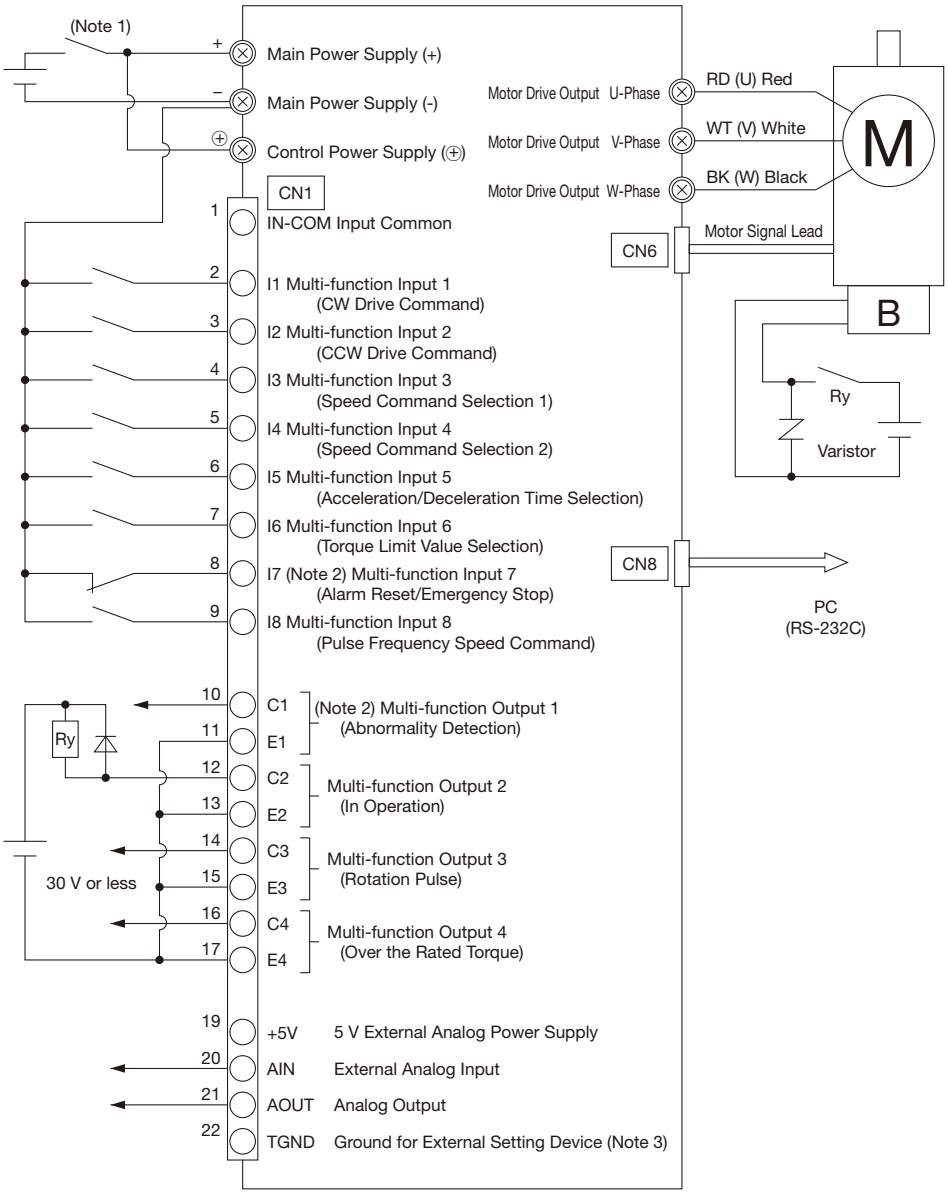

Note 1: During regenerative operation, such as lifting operation or deceleration, do not disconnect the motor from the battery in a state where the main power supply (+) and the control power supply (⊕) are connected.
Use a one-pole type switch when turning the power supply ON/OFF.The drive may be damaged if a double pole type switch is used.
Note 2: For safety reasons, the polarity is reversed under the default settings.
Note 3: Draw the reference analog voltage from the main power supply (-) terminal.

SD Series 0.75 kW

■ Sink Connection Example (When Using an External Power Supply)

When using an external power supply, set the built-in switch (SW1) of the drive as shown in the figure on the right.

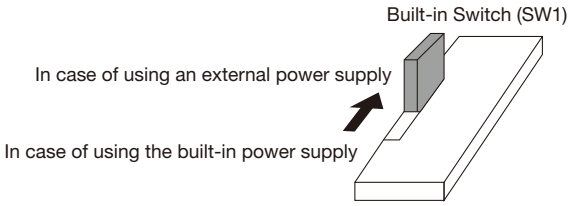

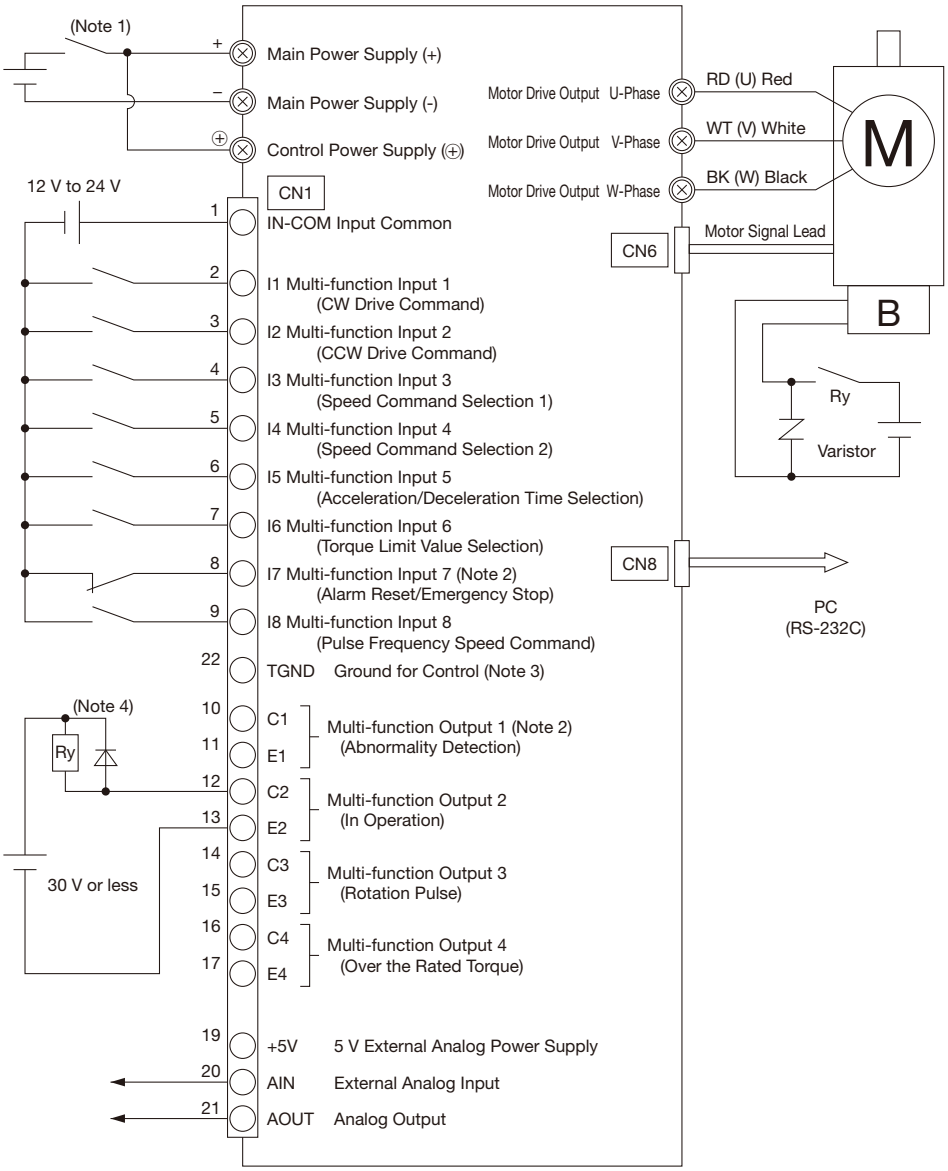

Note 1: During regenerative operation, such as lifting operation or deceleration, do not disconnect the motor from the battery in a state where the main power supply (+) and the control power supply (⊕) are connected.
Note 2: For safety reasons, the polarity is reversed under the default settings.
Note 3: Perform wiring by referring to “Precautions for wiring” on page 722.
Note 4: This figure is a wiring example for using a brake.

SD Series 0.75 kW

■ Source Connection Example (When Using an External Power Supply)

When using an external power supply, set the built-in switch (SW1) of the drive as shown in the figure on the right.

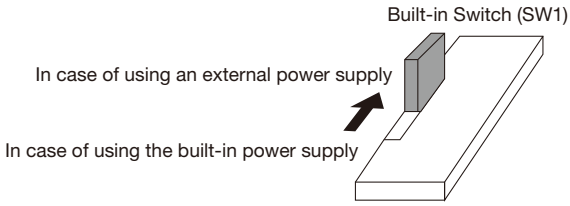

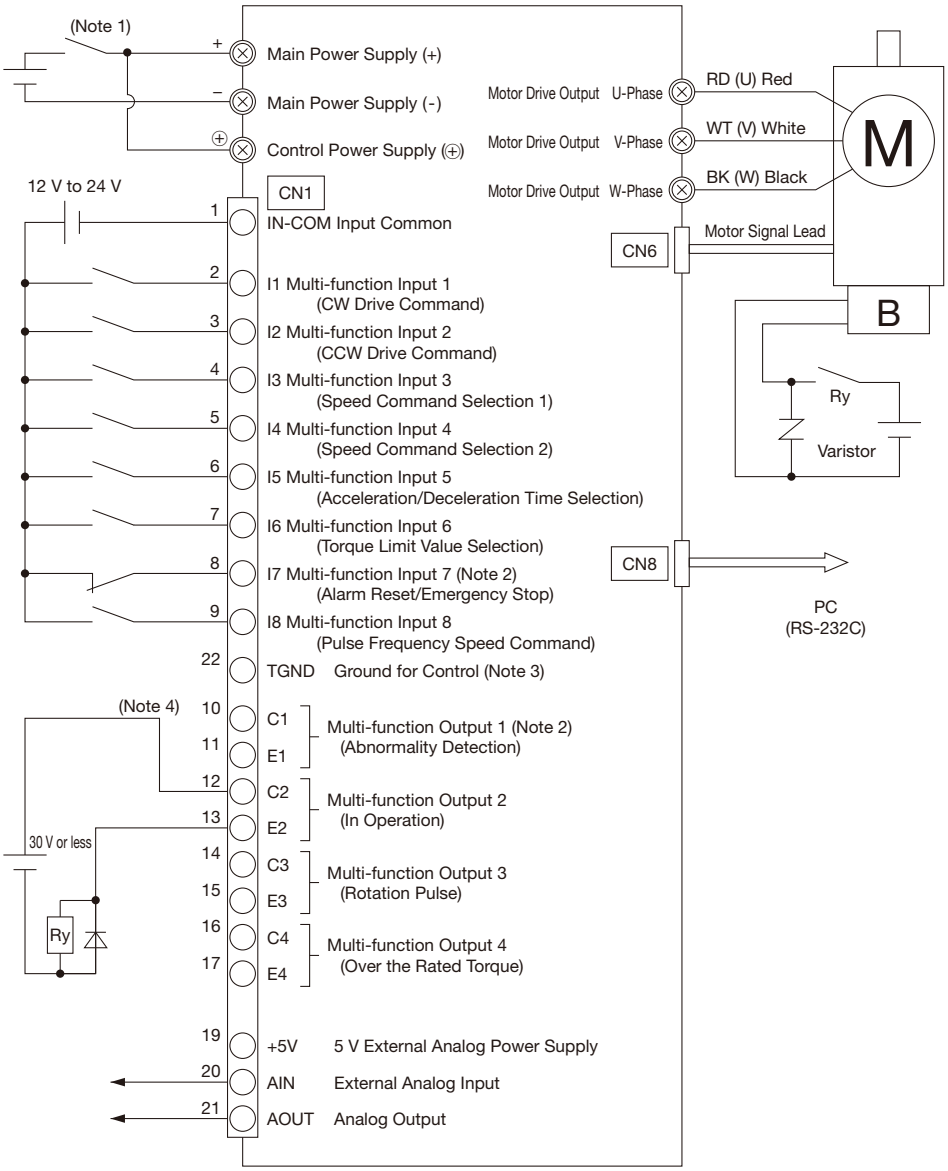

Note 1: During regenerative operation, such as lifting operation or deceleration, do not disconnect the motor from the battery in a state where the main power supply (+) and the control power supply (⊕) are connected.
Note 2: For safety reasons, the polarity is reversed under the default settings.
Note 3: Perform wiring by referring to “Precautions for wiring” on page 722.
Note 4: This figure is a wiring example for using a brake.

SD Series 0.75 kW

■ Sink Connection Example (When Using the Built-in Power Supply)

When using the built-in power supply, set the built-in switch (SW1) of the drive as shown in the figure on the right.

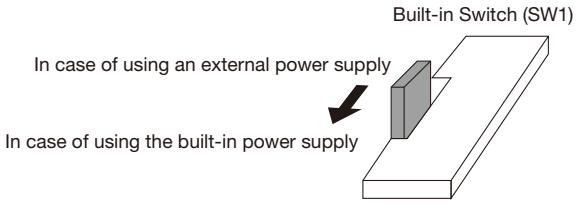

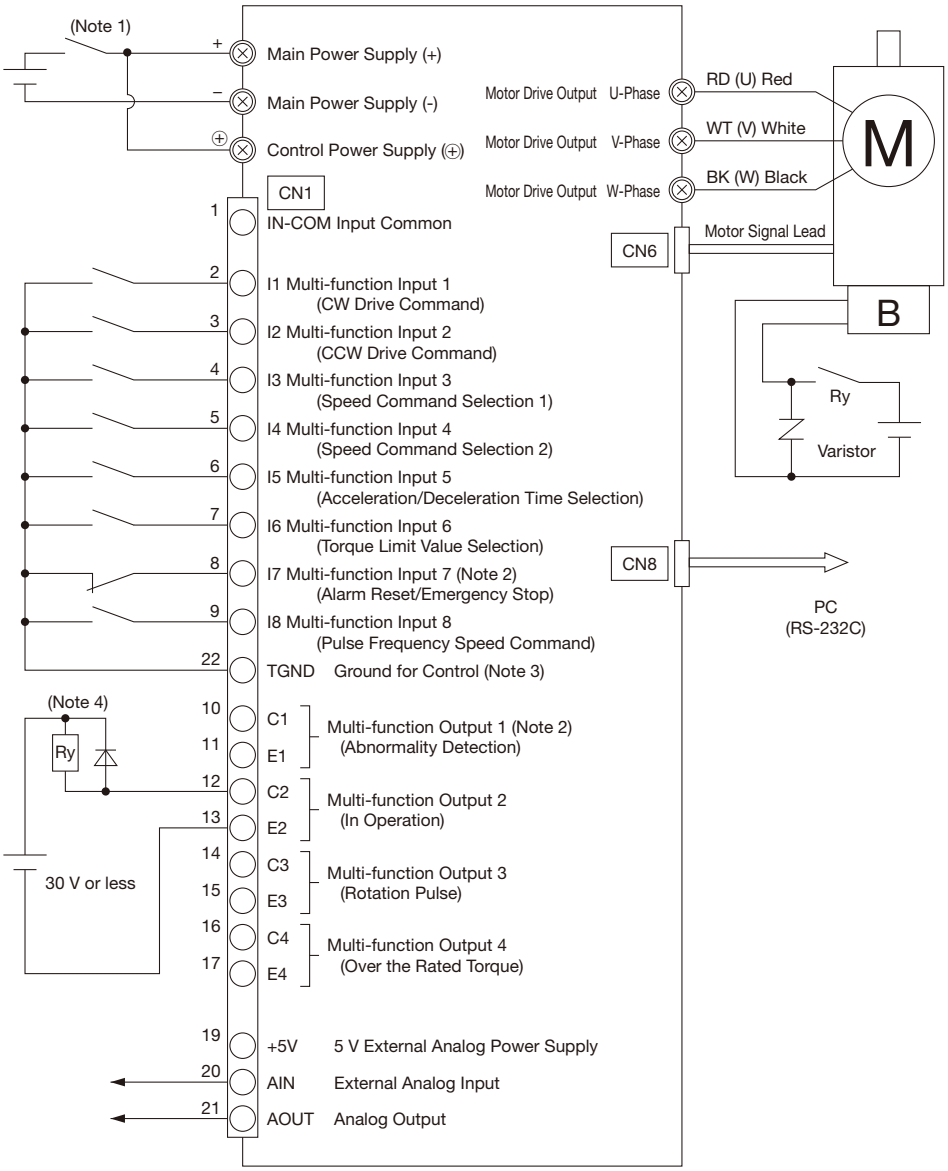

Note 1: During regenerative operation, such as lifting operation or deceleration, do not disconnect the motor from the battery in a state where the main power supply (+) and the control power supply (⊕) are connected.
Note 2: For safety reasons, the polarity is reversed under the default settings.
Note 3: Perform wiring by referring to “Precautions for wiring” on page 722.
Note 4: This figure is a wiring example for using a brake.

Explanation of Terminals

Since the I/F is not isolated from the main power supply, perform wiring with care.

Connector Specifications

Code	Manufacturer	Part Number	Remarks
Terminal Block (TM1 to 6)	—	—	Tightening torque: 0.8 to 1.2 N·m (M4)
			Tightening torque: 1.6 to 2.0 N·m (M5)
CN1	J.S.T.MFG.CO.,LTD.	S22B-PUDSS-1	Compatible Housing: PUDP-22V-S
			Adaptable Terminal: SPUD-001T-P0.5
CN6	J.S.T.MFG.CO.,LTD.	S05B-XASK-1	Compatible Housing: XAP-05V-1
			Adaptable Terminal: SXA-001T-P0.6
CN8	J.S.T.MFG.CO.,LTD.	S4B-XH-A	Compatible Housing: XHP-4
			Adaptable Terminal: SXH-001T-P0.6N

Layout of Terminal Block

Terminal Number	Function Name	Description	
⊕	Control Power Supply (+)	The positive side of the control power supply.	
–	Main Power Supply (-)	V Series	The negative side of the main power supply. This is also the negative side of the control power supply.
		SD Series	The negative side of the control power supply and the main power supply.
+	Main Power Supply (+)	The negative side of the main power supply.	
RD(U)	Motor Drive Output U-Phase	Connect the terminal to the motor. (Note 1)	
WT(V)	Motor Drive Output V-Phase		
BK(W)	Motor Drive Output W-Phase		

Note 1: Pay attention to the connection of the motor drive output. If the connection is incorrect, the motor will not operate.

I/O Connector Layout (CN1)

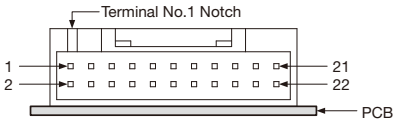

Terminal No.	Terminal Name	Function Name	Default
1	IN_COM	Input Common (Note 1)	—
2	I1	Multi-function Input 1	CW drive command
3	I2	Multi-function Input 2	CCW drive command
4	I3	Multi-function Input 3	Speed Command Selection 1
5	I4	Multi-function Input 4	Speed Command Selection 2
6	I5	Multi-function Input 5	Acceleration/Deceleration time selection
7	I6	Multi-function Input 6	Torque Limit Value Selection 1
8	I7	Multi-function Input 7	Alarm Reset/Emergency Stop (Note 2)
9	I8	Multi-function Input 8	Pulse Frequency Speed Command
10	C1	Multi-function Output 1	Abnormality Detection (Note 2)
11	E1		
12	C2	Multi-function Output 2	In Operation
13	E2		
14	C3	Multi-function Output 3 (Compatible with high-speed pulse output) (Note 3)	Rotation Pulse
15	E3		
16	C4	Multi-function Output 4 (Compatible with high-speed pulse output) (Note 3)	Over Rated Torque
17	E4		
18	—	Not used	—
19	+5V	5 V External Analog Power Supply (Note 4)	—
20	AIN	External Analog Input Terminal	Speed Command
21	AOUT	Analog Output Terminal	Speed (outputting actual speed of motor)
22	TGND	Ground for External Setting Device (Note 5)	—

Note 1: When the built-in switch is set to use the built-in power supply, the terminal will be shorted with TGND inside.
Note 2: The I/O polarity is reversed by default.
Note 3: Multi-function outputs 3 and 4 are compatible with high-speed pulse output. When selecting rotation pulse, CW rotation pulse, or CCW rotation pulse among the output functions, assign the function to multi-function outputs 3 and 4.
Note 4: This is the power supply output terminal. Do not connect an external power supply.
Note 5: Connect the terminal only when using an external setting device. Do not connect it to another terminal when no external setting device is used.

Layout of Motor Signal Connector (CN6) (Note 1)

Terminal No.	Terminal Name	Function Name
1	+15V	Power supply 15 V
2	HALL_U	Hall sensor input U-Phase
3	HALL_V	Hall sensor input V-Phase
4	HALL_W	Hall sensor input W-Phase
5	GND	Ground (Note 2)

Note 1: The maximum extension length is 5 m.
Note 2: Do not connect the terminal to the main power supply (-).

Layout of Communication Connector (CN8)

Terminal No.	Terminal Name	Function Name
1	+5V	Power supply 5 V
2	TxD	Data transmission
3	RxD	Data receipt
4	GND	Ground (Note 1)

Note 1: Do not connect the terminal to the main power supply (-).

I/O Terminal Wiring

V Series: 50 W to 0.4 kW

■ Control Input

● When using the built-in power supply (Set SW1 to the CN1 side.)
<Sink Connection>

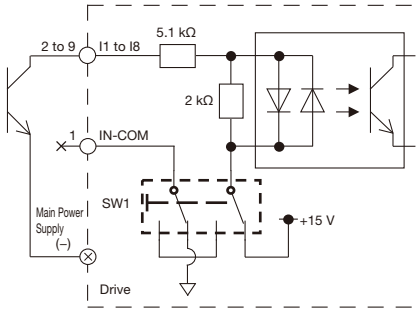

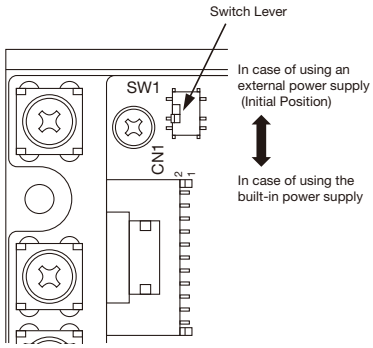

Note: Do not use CN1-1 (IN-COM) as shown in the figure above.

● When using an external power supply (Set SW1 to the opposite side of CN1.)
<Sink Connection>

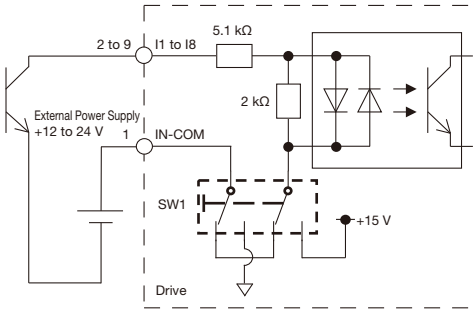

<Source Connection>

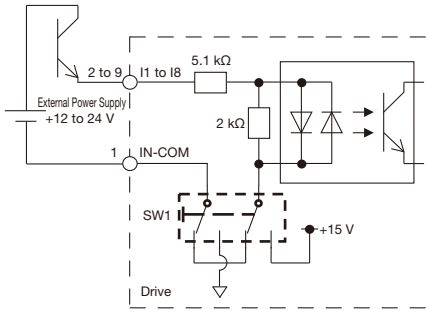

[Precautions for use of an external power supply]

If a sink connection is made using an external power supply with SW1 used as the built-in power supply and "-" of the input terminal power supply and "-" of the main and control power supplies are common, the power supplies may be shorted and the internal fuse may burn out. If the internal fuse is burned out, the drive needs to be replaced.

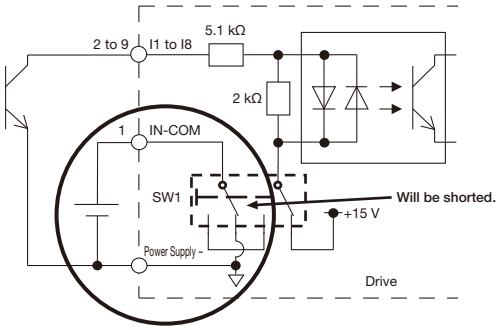

■ Control Output

● Maximum rated value of control output

Maximum voltage between C and E		30 V
Maximum current	C1/E1, C2/E2	100 mA
	C3/E3, C4/E4	50 mA

<Sink Connection>

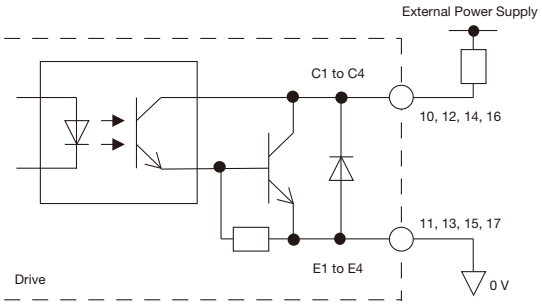

<Source Connection>

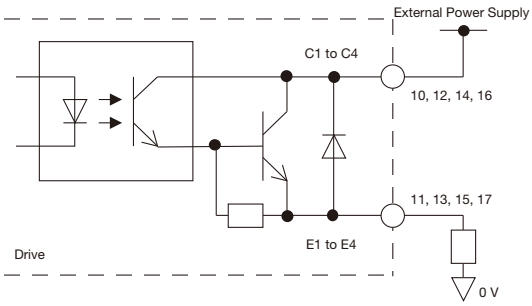

V Series: 50 W to 0.4 kW

■ External Analog Input

By inputting a DC voltage to the AIN terminal (external analog input terminal), a speed command value or torque limit value command can be enabled.
Note: The criterion for the DC voltage is different between the external speed setting device and the DC voltage control.
Connect the wires by referring to the following wiring examples:

● External speed setting device wiring example
An external speed setting device is available as an option.
If you prepare an external speed setting device from another vendor, select one within the range of 1 to 20 kΩ.
Do not connect TGND to any terminal other than terminal No. 1 of the external speed setting device.

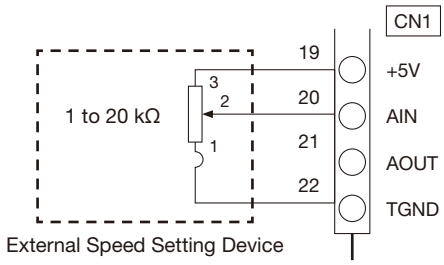

● DC voltage control wiring example
If you intend to use an analog output unit or the like, one having an insulated output is recommended.
Connect the - output terminal of the analog output unit directly to the drive main power supply (-).

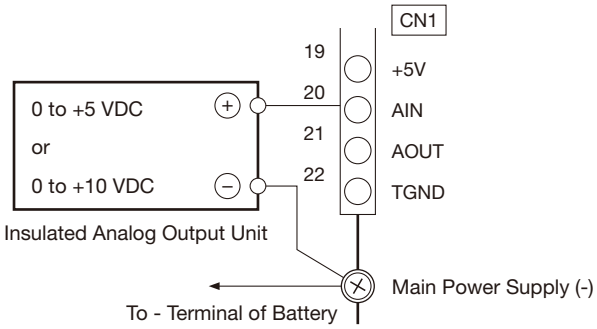

SD Series 0.75 kW

Control Input

● When using an external power supply (Set SW1 to the O side (default).)

<Sink Connection>

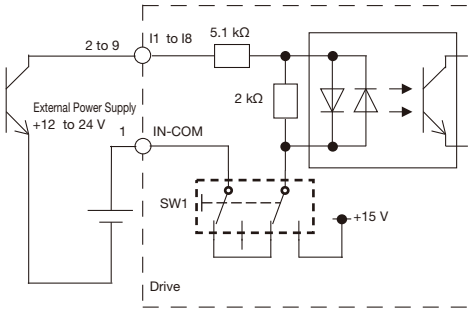

<Source Connection>

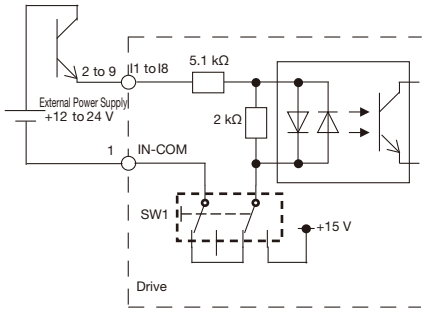

● When using the built-in power supply (Set SW1 to the I side.)

<Sink Connection>

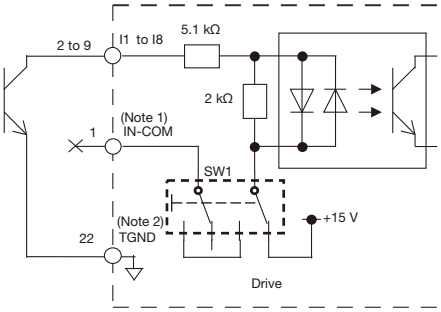

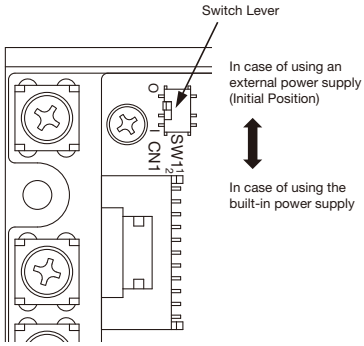

Note 1: IN-COM will not be used when using the built-in power supply
Note 2: Perform wiring by reference to Precautions for wiring on page 722.

Control Output

● Maximum rated value of control output

Maximum voltage between C and E		30 V
Maximum current	C1/E1, C2/E2	100 mA
	C3/E3, C4/E4	50 mA

<Sink Connection>

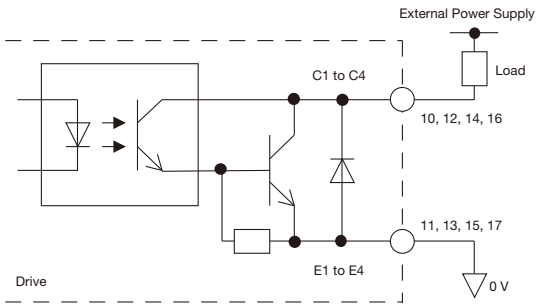

<Source Connection>

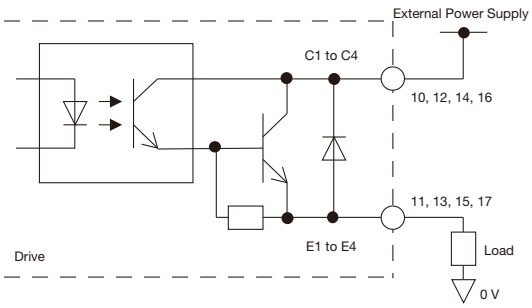

SD Series 0.75 kW

■ External Analog Input

By inputting a DC voltage to the AIN terminal (external analog input terminal), a speed command value or torque limit value command can be enabled.
Note: The criterion for the DC voltage is different between the external speed setting device and the DC voltage control.
Connect the wires by referring to the following wiring examples:

● External speed setting device wiring example
An external speed setting device is available as an option.
If you prepare an external speed setting device from another vendor, select one within the range of 1 to 20 kΩ.

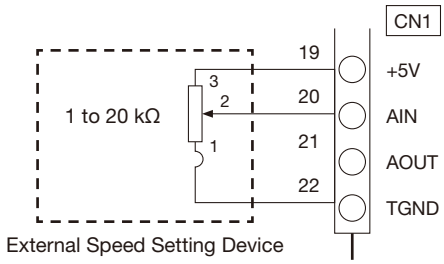

● DC voltage control wiring example
If you intend to use an analog output unit or the like, one having an insulated output is recommended.

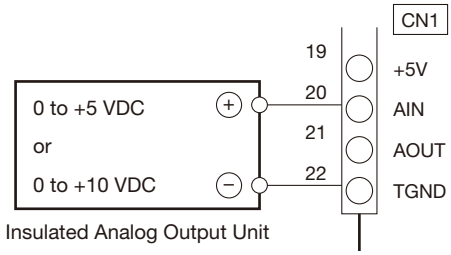

● Precautions for wiring
When TGND and the main power supply (-) are connected outside the drive, the current flowing through the main power supply (-) will be diverted to the TGND side. Each current value depends on the wiring resistance. If a current of 2 A or more flows to the TGND side, it may cause damage to the drive and control device. Perform wiring under the conditions shown below.

Wire to be connected to TGND: 0.4 mm (AWG26) or less in diameter
Wire to be Connected to main power supply (-): 1.6 mm (AWG14) or more in diameter

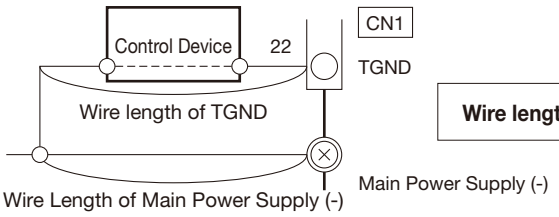

Wire length of TGND ≥ Wire length of main power supply (-)

Parameter List

User Parameters

■ How to Set Parameters

User parameters can be changed using the software “ACD-PSTool” for computer (hereinafter referred to as PC).
Note: “ACD-PSTool” can be downloaded from our website for free.
Note: The communication cable between a PC (RS-232C) and the drive is an optional item (sold separately).

● The operation check of “ACD-PSTool” is performed by any of the following operating systems: Windows7®, Windows8®, Windows8.1®, and Windows10®

■ Parameter List

● Attributes

Each parameter has an attribute. Read the descriptions below.

Attribute	Description
P	When the parameter is changed, the setting will become effective after rebooting The previous setting will remain effective until the power is rebooted.
S	When the parameter is changed, the setting will become effective after the motor stops or the power is rebooted. The previous setting will remain effective while the motor is operating.
D	As soon as the parameter is changed, the new setting will become effective.

Command Parameters: Parameters Related to Command Settings

No.	Name	Description	Unit	Setting Range		Default Value		Attribute
				V Series	SD Series	V Series	SD Series	
Pn000	Speed Command Source Selection	Used to select a speed command method. 1: External analog command 2: PWM speed command 3: Pulse frequency speed command 4: Built-in trimmer 1 5: Speed command 1 (Pn001)	—	1 to 5	1 to 5	1	1	S
Pn001	Speed Command 1	Used to set speed command 1.	r/min	100 to 3000	80 to 4000	2500	3000	D
Pn002	Speed Command 2	Used to set speed command 2.	r/min	100 to 3000	80 to 4000	2500	3000	D
Pn003	Speed Command 3	Used to set speed command 3.	r/min	100 to 3000	80 to 4000	2500	3000	D
Pn004	Speed Command 4	Used to set speed command 4.	r/min	100 to 3000	80 to 4000	2500	3000	D
Pn005	Speed Command 5	Used to set speed command 5.	r/min	100 to 3000	80 to 4000	2500	3000	D
Pn006	Speed Command 6	Used to set speed command 6.	r/min	100 to 3000	80 to 4000	2500	3000	D
Pn007	Speed Command 7	Used to set speed command 7.	r/min	100 to 3000	80 to 4000	2500	3000	D
Pn008	Speed Command 8	Used to set speed command 8.	r/min	100 to 3000	80 to 4000	2500	3000	D
Pn020	Acceleration/ Deceleration Time Command Source Selection	Used to select the command method for acceleration/deceleration time 1. 1: Built-in trimmer 2 2: Acceleration time 1, deceleration time 1	—	1 to 2	1 to 2	1	1	S
Pn021	Acceleration Time 1	Used to set acceleration time 1 from 0 r/min to the acceleration/deceleration time standard speed (Pn025).	s	0.00 to 5.00	0.00 to 5.00	0.1	0.1	D
Pn022	Deceleration Time 1	Used to set deceleration time 1 from the acceleration/deceleration time standard speed (Pn025) to 0 r/min.	s	0.00 to 5.00	0.00 to 5.00	0.1	0.1	D
Pn023	Acceleration Time 2	Used to set acceleration time 2 from 0 r/min to the acceleration/deceleration time standard speed (Pn025).	s	0.00 to 5.00	0.00 to 5.00	0.1	0.1	D
Pn024	Deceleration Time 2	Used to set deceleration time 2 from the acceleration/deceleration time standard speed (Pn025) to 0 r/min.	s	0.00 to 5.00	0.00 to 5.00	0.1	0.1	D
Pn025	Acceleration/ Deceleration Time Standard Speed	Used to set the acceleration/deceleration time standard speed. Acceleration time: Time from 0 r/min to this parameter Deceleration time: Time from this parameter to 0 r/min	r/min	1000 to 5000	1000 to 5000	2500	3000	S

Attribute S: The change will become applicable after the motor stops or the power is rebooted. D: The change will become applicable at any time.

No.	Name	Description	Unit	Setting Range	Default Value		Attribute
					V Series	SD Series	
Pn030	Torque Limit Value Command Source Selection	Used to select the command method for torque limit value 1. 1: External analog command 2: Built-in trimmer 3 3: Torque Limit Value 1	—	1 to 3	2	2	S
Pn031	Torque Limit Value 1	Used to set torque limit value 1.	%	0 to 200	150	150	D
Pn032	Torque Limit Value 2	Used to set torque limit value 2.	%	0 to 200	150	150	D
Pn033	Torque Limit Value 3	Used to set torque limit value 3.	%	0 to 200	150	150	D
Pn034	Torque Limit Value 4	Used to set torque limit value 4.	%	0 to 200	150	150	D
Pn040	Built-in Trimmer 1/ PWM Speed Command Standard Speed	Used to set the standard speed of the built-in trimmer and the PWM speed command (Duty 100 %).	r/min	100 to 5000	3000	4000	S
Pn041	Frequency Setting for Pulse Frequency Speed Command	Used to set the frequency of the pulse frequency speed command at the standard speed (Pn042).	×10Hz	1 to 9999	2500	3000	S
Pn042	Standard Speed for Pulse Frequency Speed Command	Used to set the standard speed of the pulse frequency speed command.	r/min	1 to 5000	2500	3000	S
Pn043	PWM Speed Command Frequency	Used to set the frequency of PWM signal to be input.	Hz	10 to 100000 (Note 1)	1000	1000	S
Pn050	External Analog Input Level	Used to set the voltage level of the external analog input. 1: 0 to 10 V 2: 0 to 5 V	—	1 to 2	2	2	S
Pn051	Analog Input Gain	Used to set the inclination of the external analog command.	(r/min) /V or %/V	–9.99 to 9.99	0.6	0.8	S
Pn052	Analog Input Offset	Used to set the offset of the external analog command.	r/min or V%	0 to 9999	0	0	S
Pn060	Analog Output Selection	Used to set the function to be outputted in analog form. 1: Speed (The actual speed of the motor will be outputted.) 2: Load co-efficient (The load co-efficient of the motor will be outputted.) 3: Commanded speed (The commanded speed of the drive will be outputted.)	—	1 to 3	1	1	D
Pn061	Analog Output Gain	Used to set the inclination of the analog output.	V/(r/min) or V/%	–99.99 to 99.99	1.00	1.00	D
Pn062	Analog Output Offset	Used to set the offset of the analog output.	V	0.00 to 5.00	0.00	0.00	D

Attribute S: The change will become applicable after the motor stops or the power is rebooted. D: The change will become applicable at any time.
Note 1: Frequencies of 10 to 1000 Hz can be set in increments of 1 Hz, and frequencies of 1000 to 100000 Hz can be set in increments of 10 Hz.

■ Pn030 Torque Limit Value Command Source Selection/Pn031 to Pn034 Torque Limit Value 1 to 4

These parameters are used to set motor output torque limit values.
Select a torque limit value using Multi-function Input: Torque Limit Value Selection 1 and 2.
The torque limit values corresponding to the combinations shown in the table below can be commanded by changing the ON/OFF state of the input terminals to which Torque Limit Value Selection 1 and 2 are assigned.
When both Torque Limit Value Selection 1 and 2 are set to OFF, change the setting of Torque Limit Value 1 Selection (Pn030) to select the command method for the torque limit value.

Torque Limit Value Selection 1	Torque Limit Value Selection 2	Torque Command	
OFF	OFF	Torque Limit Value Command Source Selection (Pn030)	1: External Analog Command 2: Built-in Trimmer 3 3: Torque Limit Value 1 (Pn031)
ON	OFF	Torque Limit Value 2 (Pn032)	
OFF	ON	Torque Limit Value 3 (Pn033)	
ON	ON	Torque Limit Value 4 (Pn034)	

Command parameters: Parameters related to command settings

No.	Name	Description	Unit	Setting Range	Default Value	Attribute
Pn100	I1 Input Function Selection	Used to select the function of input terminal 1.	—	1 to 12	1	P
Pn101	I2 Input Function Selection	Used to select the function of input terminal 2.	—	1 to 12	2	P
Pn102	I3 Input Function Selection	Used to select the function of input terminal 3.	—	1 to 12	3	P
Pn103	I4 Input Function Selection	Used to select the function of input terminal 4.	—	1 to 12	4	P
Pn104	I5 Input Function Selection	Used to select the function of input terminal 5.	—	1 to 12	6	P
Pn105	I6 Input Function Selection	Used to select the function of input terminal 6.	—	1 to 12	7	P
Pn106	I7 Input Function Selection	Used to select the function of input terminal 7.	—	1 to 12	9	P
Pn107	I8 Input Function Selection	Used to select the function of input terminal 8.	—	1 to 14	14	P
Pn110	I1 Input Polarity Selection	Used to select the polarity of input terminal 1.	—	0 to 1	0	P
Pn111	I2 Input Polarity Selection	Used to select the polarity of input terminal 2.	—	0 to 1	0	P
Pn112	I3 Input Polarity Selection	Used to select the polarity of input terminal 3.	—	0 to 1	0	P
Pn113	I4 Input Polarity Selection	Used to select the polarity of input terminal 4.	—	0 to 1	0	P
Pn114	I5 Input Polarity Selection	Used to select the polarity of input terminal 5.	—	0 to 1	0	P
Pn115	I6 Input Polarity Selection	Used to select the polarity of input terminal 6.	—	0 to 1	0	P
Pn116	I7 Input Polarity Selection	Used to select the polarity of input terminal 7.	—	0 to 1	1	P
Pn117	I8 Input Polarity Selection	Used to select the polarity of input terminal 8.	—	0 to 1	0	P
Pn120	C1-E1 Output Function Selection	Used to select the function of output terminal 1.	—	1 to 11	1	P
Pn121	C2-E2 Output Function Selection	Used to select the function of output terminal 2.	—	1 to 11	2	P
Pn122	C3-E3 Output Function Selection	Used to select the function of output terminal 3.	—	1 to 11	3	P
Pn123	C4-E4 Output Function Selection	Used to select the function of output terminal 4.	—	1 to 11	8	P
Pn125	C1-E1 Output Polarity Selection	Used to select the polarity of output terminal 1.	—	0 to 1	1	P
Pn126	C2-E2 Output Polarity Selection	Used to select the polarity of output terminal 2.	—	0 to 1	0	P
Pn127	C3-E3 Output Polarity Selection	Used to select the polarity of output terminal 3.	—	0 to 1	0	P
Pn128	C4-E4 Output Polarity Selection	Used to select the polarity of output terminal 4.	—	0 to 1	0	P

P: The change will become applicable after the power is rebooted.

■ Input Terminal Function List

Setting	Function
1	CW drive command
2	CCW drive command
3	Speed Command Selection 1
4	Speed Command Selection 2
5	Speed Command Selection 3
6	Acceleration/Deceleration time selection
7	Torque Limit Value Selection 1
8	Torque Limit Value Selection 2
9	Alarm reset/Emergency stop
10	Brake control signal forced ON command
11	Direct current lock
12	Load inertia switch
13	PWM speed command
14	Pulse Frequency Speed Command

■ Output Terminal Function List

Setting	Function
1	Error detection
2	In Operation
3	Rotation Pulse
4	CW rotation pulse
5	CCW rotation pulse
6	Rotational Direction
7	Rotating
8	Over Rated Torque
9	Over specified torque
10	Brake control signal
11	Voltage drop warning

Note 1: The brake control signal is available from software Ver. 0004. Do not use a drive of Ver. 0003 or older version.

Comparison Parameters: Parameters Related to Comparisons of Output Functions

No.	Name	Description	Unit	Setting Range	Default Value	Attribute
Pn151	Current Limit Value upon Direct Current Lock	Used to set the current value (rated current ratio) when the direct current lock is activated.	%	0 to 100	30	D
Pn160	Torque Detection Level	Used to set the current value (rated current ratio) at which the output of over specified torque will be turned ON.	%	0 to 200	80	S
Pn161	Torque Detection Hysteresis Width	Used to set the hysteresis width (rated current ratio) at which the output of over specified torque will be turned OFF.	%	0 to 50	10	S
Pn165	Rated Torque Detection Hysteresis Width	Used to set the hysteresis width (rated current ratio) of the torque at which the output of over rated torque will be turned OFF.	%	0 to 50	10	S

Mechanical Brake Parameters: Parameters Related to the Mechanical Brake

No.	Name	Description	Unit	Setting Range	Default Value		Attribute
					V Series	SD Series	
Pn170	Mechanical Brake Release Speed Level	Used to set the internal commanded speed value at which the brake control signal will be turned ON.	r/min	1 to 1000	20	20	S
Pn171	Mechanical Brake Operation Speed Level	Used to set the internal commanded speed at which the brake control signal will be turned OFF.	r/min	0 to 1000	20	20	S
Pn172	Mechanical Brake Release Standby Time	Used to set the delay time until the signal is actually turned ON after the internal commanded speed reaches or exceeds the brake control signal ON speed.	s	0.000 to 2.000	0.005	0.005	S
Pn173	Mechanical Brake Operation Standby Time	Used to set the delay time until the signal is actually turned OFF after the internal commanded speed reaches or exceeds the brake control signal OFF speed.	s	0.000 to 2.000	0.005	0.005	S
Pn175	Input Voltage Drop Warning Voltage	Used to set the voltage that will issue an input voltage drop warning alarm.	V	0.0 to 50.0	12 V:10.0 24 V:20.0 48 V:40.0	40.0	D
Pn180	Dynamic Brake Transition Speed	Used to set the speed of transition to the dynamic brake during a deceleration stop.	r/min	30 to 5000	50 W:3000 100 W:3000 200 W:500 400 W:500	4000	S

Attribute S: The change will become applicable after the motor stops or the power is rebooted. D: The change will become applicable at any time.

Gain Parameters: Parameters Related to Gains

No.	Name	Description	Unit	Setting Range		Default Value		Attribute
				V Series	SD Series	V Series	SD Series	
Pn200	Rigidity Table	Used to set a rigidity table. After the setting is completed, the following parameters will be changed to the set values in each table. - Speed Control Proportional Gain (Pn201) - Speed Control Integral Time (Pn202) - Torque Filter Time Constant (Pn203)	—	1 to 5	1 to 5	3	3	S
Pn201	Speed Control Proportional Gain	Used to set the proportional gain of speed control.	—	0 to 200	0 to 200	100	180	D
Pn202	Speed Control Integral Time	Used to set the integral time of speed control. Integral control will be disabled when “0” is set.	—	0 to 1000	0 to 1000	80	80	D
Pn203	Torque Filter Time Constant	Used to set the time constant of the torque filter.	ms	0.0 to 10.0	0.0 to 10.0	2.0	2.0	D
Pn204	Moment of Inertia Ratio 1	Used to set the moment of inertia ratio of the connected load. Set the percentage of the moment inertia to the motor rotor inertia as the motor shaft equivalent.	%	0 to 9999	0 to 9999	0	0	D
Pn205	Moment of Inertia Ratio 2	Used to set the moment of inertia ratio of the connected load. Set the percentage of the moment inertia to the motor rotor inertia as the motor shaft equivalent.	%	0 to 9999	0 to 9999	0	0	D
Pn250	Overload Selection	Used to select a method for detecting overload alarms. <V Series> 1: Detection based on the overload application time 2: Detection based on the electronic thermal. <SD Series> Cannot be changed.	—	1 to 2	2	2	2	S
Pn300	User Parameter reset	When “5” is set, the user parameters will reset, and this parameter will become “0.”	—	0 to 5	0 to 5	0	0	P

P: The change will become applicable after the power is rebooted.
S: The change will become applicable after the motor stops or the power is rebooted.
D: The change will become applicable at any time.

■ Rigidity Table List

Setting	Speed Control Proportional Gain		Speed Control Integral Time		Torque Filter Time Constant	
	V Series	SD Series	V Series	SD Series	V Series	SD Series
1	60	160	120	100	3.0	3.0
2	80	170	100	90	2.5	2.5
3	100	180	80	80	2.0	2.0
4	120	190	60	70	1.5	1.5
5	140	200	40	60	1.0	1.0

Safeguard Function List

When an error is detected, this drive will output an error detection signal and display the error state with an LED lamp. (LED1 (red) will light up, or LED3 (green) will light up or blink.)
Moreover, in case of an error, the motor will enter the emergency stop state (free run state), regardless of the operating state. In such a case, the brake control signal will be turned OFF, and the brake control signal forced ON command will become disabled.

To resolve the error detection state, eliminate all factors that caused the alarm, and reset the alarm.

The PC software “ACD-PSTool” enables you to check the history of errors that occurred in the past.
For details, refer to the instruction manual for “ACD-PSTool”.

Drives error list and display method

The following list shows the blinking patterns of LED3 (green) when errors are detected, and the conditions under which alarms will be issued.

Number of blinks of LED 3 (green)	Alarm Name	Alarm Issuing Condition
0 times (stays lit)	Overload	An alarm will be issued based on the operation time in overload operation. Two detection methods, detection based on the lapse of given time and detection by electronic thermal, are available. *Refer to the explanation of the user parameter Pn250 for details.
Once	Overvoltage	An alarm will be issued if the input voltage of the drive exceeds the maximum input voltage.
Twice	Voltage drop	An alarm will be issued if the input voltage of the drive drops below the minimum input voltage when the motor is in operation (including special lock).
Three times	Drive overheat	An alarm will be issued if the temperature of the drive heat sink exceeds 85 °C.
Four times	Overspeed	An alarm will be issued if the speed of the motor (including when the motor is rotated) exceeds 1.2 times the maximum speed.
Five times	Overcurrent	An alarm will be issued if a current 500 to 600 % or more of the rated current of the motor flows into the drive.
Six times	Sensor error	An alarm will be issued if the pattern of the hall signal pattern is HHH or LLL.
Ten times	System error	An alarm will be issued if there is an error inside the drive.

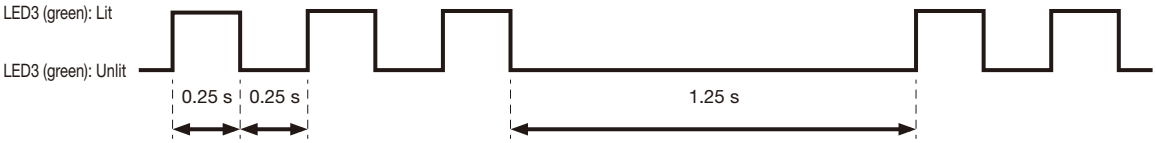

Connection Method and Installation

Connection Method

V Series: 50 W to 0.4 kW

Connect devices as shown in the figure below.

- The length of the cords from the gearmotor is 0.5 m.
- Use the optional extension cord if you need to extend the motor signal lead.
- When extending a cord by connecting optional extension cords, the overall length must not exceed 4.5 m (up to four extension cords).
- Extension cords are not available for the motor's power wire and the brake lead wires.
  Please use a cord with a wire diameter not smaller than the wire diameter specified on page 700 with length of 5 m or less. Minimize the length of the motor power wire. Otherwise the characteristics may be impaired

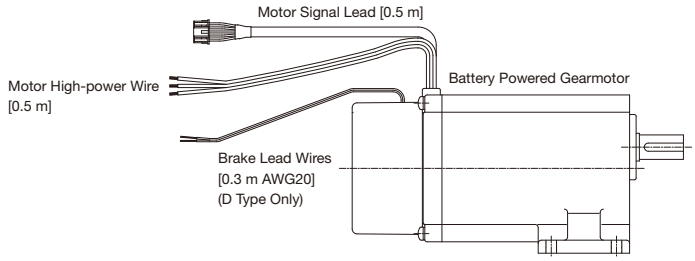

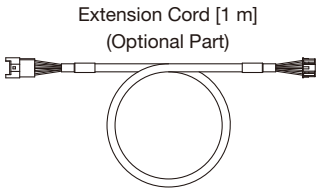

* The extension cord will be shipped with a connector provided at both ends.

■ Example of Connection to Our Drives

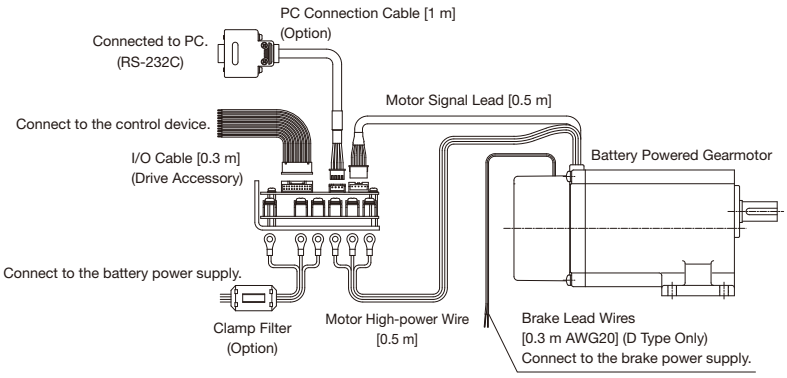

Motor Signal Lead and Power Wire

■ Signal Lead Colors and Signal Names

Color of Lead Wire	Function
Purple	Pole sensor power supply (15 V for our drive)
Orange	U-phase pole signal output (open collector)
Green	V-phase pole signal output (open collector)
Green/White	W-phase pole signal output (open collector)
Gray	GND

■ Motor Power Wire Colors and Signal Names

Color of Lead Wire	Description
Red	U-Phase
White	V-Phase
Black	W-Phase

■ Connector Pin Arrangement

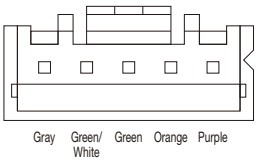

XAP-05V-1 manufactured by J.S.T.MFG.CO.,LTD.

■ Brake Lead Wire Colors and Voltage Specifications

Color of Lead Wire	Voltage
Yellow	12 V specification
White	24 V specification
Orange	48 V specification

SD Series 0.75 kW

Connect devices as shown in the figure below.

- The length of the cords from the gearmotor is 0.5 m.
- Use the optional extension cord if you need to extend the motor signal lead.
- When extending a cord by connecting optional extension cords, the overall length must not exceed 4.5 m (up to four extension cords).
- Extension cords are not available for the motor power lead and the brake lead wires. Please use a cord with a wire diameter not smaller than the wire diameter specified on page 700, with length of 5 m or less. Minimize the length of the motor power lead. Otherwise the characteristics may be impaired

Extension Cord [1 m]
(Optional Part)

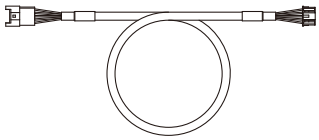

* The extension cord will be shipped with a connector provided at both ends.

■ Example of Connection to Our Drives

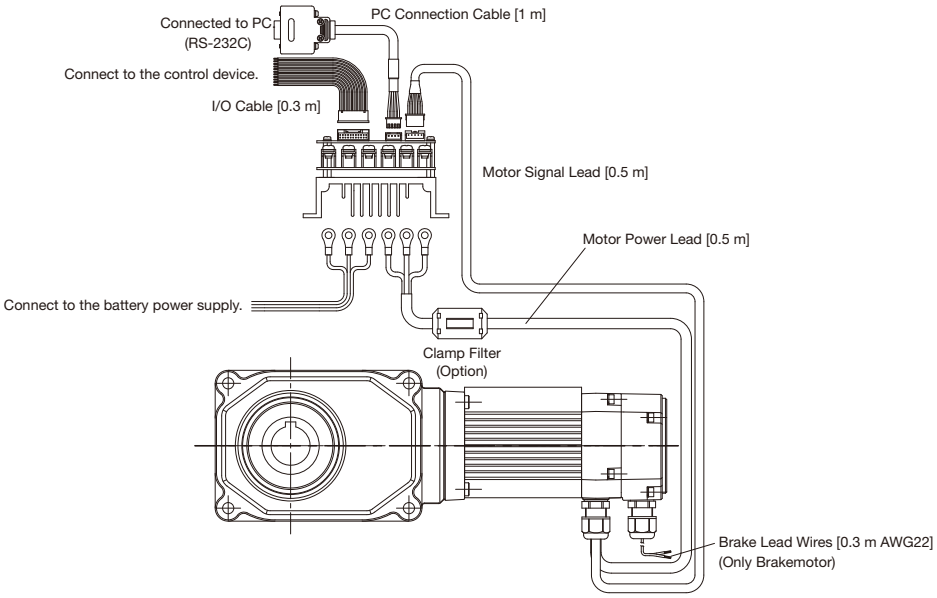

Motor Signal Lead and Power Lead

■ Signal Lead Colors and Signal Names

Color of Lead Wire	Function
Yellow	Pole sensor power supply (15 V for our drive)
Red	U-phase pole signal output (open collector)
White	V-phase pole signal output (open collector)
Black	W-phase pole signal output (open collector)
Green	GND

■ Motor Power Lead Colors and Signal Names

Color of Lead Wire	Description
Red	U-Phase
White	V-Phase
Black	W-Phase

■ Connector Pin Arrangement

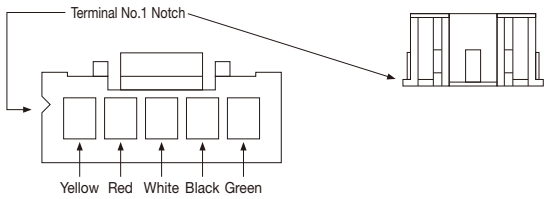

XAP-05V-1 manufactured by J.S.T.MFG.CO.,LTD.

■ Brake Lead Wire Colors and Voltage Specifications

Color of Lead Wire	Voltage
Brown	48 V specification

Precautions for Installation

When installing drives, keep the following precautions in mind:

■ Installation Environment

Ambient Temperature: -10 °C to 50 °C
Ambient Humidity: 95 % RH max (No condensation)
Altitude: 1000 m or lower
Environment: A place free from corrosive gas, explosive gas, and/or vapor. Well ventilated place with no dust.
Vibration: 2.0 G or less
Installation Place: Indoors

* When installing a drive, place it in a switchboard or take other measures to prevent foreign substances from entering it.
* There is no restriction on the mounting posture of the drive, but keep a clearance of 30 mm or more above and below the drive.

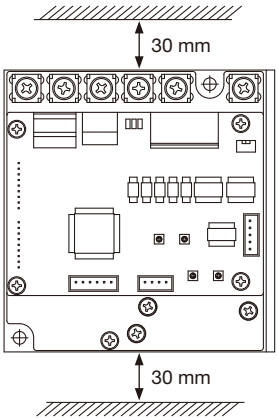

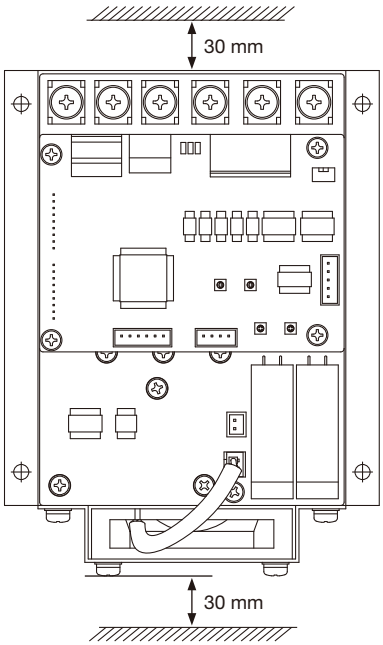

When installing drives side by side, keep an interval of 60 mm or more between them.

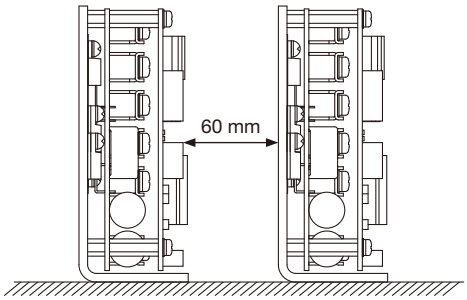

Accessories

I/O Cable (to Be Connected to CN1)

No.	Description	Color
1	IN-COM	Yellow
2	I1	
3	I2	
4	I3	
5	I4	
6	I5	
7	I6	
8	I7	
9	I8	
10	C1	Green
11	E1	
12	C2	
13	E2	
14	C3	
15	E3	
16	C4	
17	E4	
18	—	—
19	+5V	Orange
20	AIN	
21	AOUT	
22	TGND	

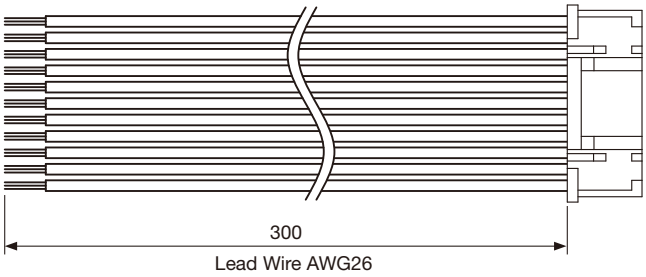

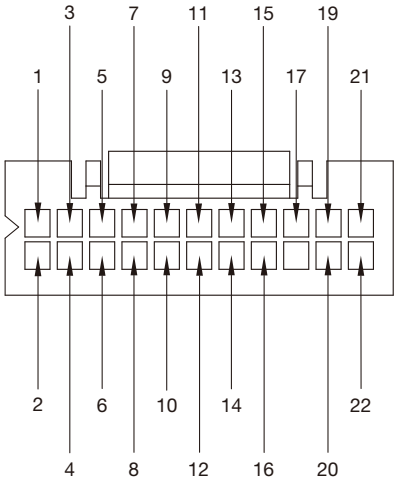

Code	Manufacturer	Type on Board Side	Type on I/O Cable Side
CN1	J.S.T.MFG.CO.,LTD.	S22B-PUDSS-1	Compatible Housing: PUDP-22V-S
			Adaptable Terminal: SPUD-001T-P0.5

Options

External Speed Setting Device/OP-RV-24B20K

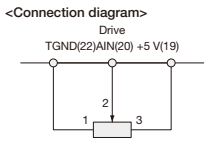

External Speed Setting Device
OP-RV-24B20K

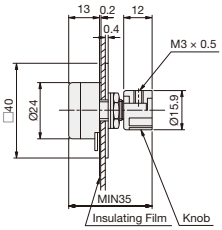

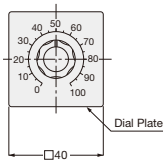

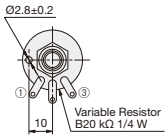

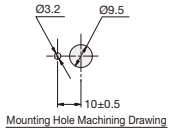

Mounting Hole Machining Drawing

Extension Cord/OP-ACDSG1 (for Signal)

Use this extension cord as a signal lead between a drive and a gearmotor.

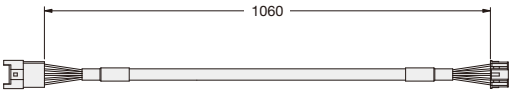

Part Name	Extension Cord Length
OP-ACDSG1	1 m

- The extension cord will be shipped with a connector provided at both ends.
- Only the signal lead from the motor can be extended.
- Extension cords are not available for the motor power wire and the brake lead wires. Please use a cord with a wire diameter not smaller than the wire diameter specified on the motor specification table on page 700, with length of 5 m or less.

Communication Cable: OP-ACDCOM1 (for Communication)

This is a communication cable for PC connection. For connection to the USB port, prepare an RS-232C-USB conversion cable. Using dedicated software, you can set speed commands, acceleration/deceleration times, and torque limits with numerical values.

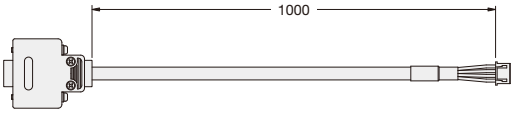

Part Name	Cable Length
OP-ACDCOM1	1 m

Clamp Filter/OP-ZCAT

Manufacturer: TDK Model: ZCAT2035-0930A

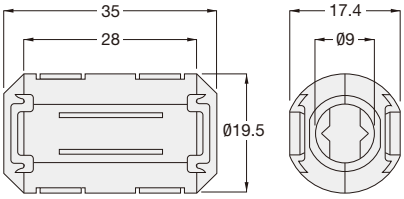

MEMO

Technical Documentation

BATTERY POWERD GEARMOTORS

P.736 Selection Process Steps and Examples

P.738 Service Factor (Sf)

P.739 Allowable Moment of Inertia/ Acceleration Torque, Braking Torque (Motor Shaft Equivalent) Tp

P.740 Method for Calculating the Moment of Inertia

P.741 Overhung Load (O.H.L.)

P.744 Conformance of Dedicated Drives to Global Standards

P.745 Precautions for Use

Selection Process Steps and Examples

Selection Examples Battery Powered Gearmotors (V Series)

Application ..... Cart Drive (four wheels)
Maximum Speed ..... 2 km/h
Outer Diameter of Tire ..... 200 mm
Total Weight ..... 100 kg
Load Point of O.H.L. ..... 150 mm from the flange surface (Refer to the figure on the right)
Operation Time ..... 10 hours or more/day
Frequency of Startup ..... 70 times or less/day
Drag coefficient of Wheel 0.1

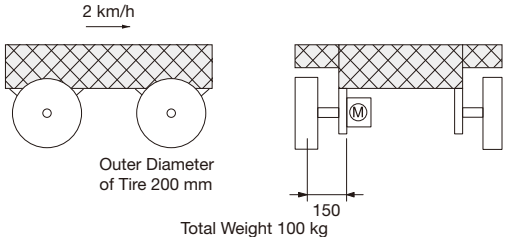

* The selection example shown here is an example when a dedicated drive separately sold is used.
Please utilize the calculation and selection tool on our website. (https://sentei.nissei-gtr.co.jp/english/calculation)
You may calculate the necessary power by inputting the usage conditions and the series on our website.

Selection Process Steps	Selection Examples
Determining the type (parallel shaft, right angle shaft, right angle hollow bore)	Decide on the VF3S (concentric right angle hollow bore) based on axle mounting.
Determining the reduction ratio	2 km/h = 33333 mm/min Calculate the speed of the drive shaft at the maximum speed. 33333 ÷ (200 × π) = 53.1 r/min Since the maximum speed of the motor shaft is 2500 r/min, 2500 ÷ 53.1 = 47.1 Since a variable speed motor is used, select a reduction ratio of 1/40, which is slightly smaller than the calculated value.
Verifying the torque and the motor power	100 kg × 0.1 × (200 mm ÷ 2 ÷ 1000) × Sf × 9.8 Assuming that the service factor (Sf) is 1.25, the value of the equation shown above is 12.25 N·m. * (For the service factor, refer to page 738.) A gearmotor with an allowable output shaft torque of 12.25 N·m or more at a reduction ratio of 1/40 has a power of 0.1 kW or more.
Verifying the converted load moment of inertia on motor shaft	100 kg × (200 mm ÷ 2 ÷ 1000)^2× i^2× C By substituting 1 into the correction coefficient (C) and 1/40 into i, the value of the equation shown above is 0.000625 kg·m^2. * (For the correction coefficient of the moment of inertia, refer to [Table-2] on page 739.) From the table of allowable moments of inertia, the tolerance of 100 W is 0.00125 kg,·m^{2}the value is within the tolerance. * (For the table of allowable moments of inertia, refer to [Table-3] on page 739.) * (The calculation shown above is a simple example and ignores the moment of inertia of the wheel, the shaft, etc.)
Verifying the O.H.L.	The O.H.L. by the load torques is: 12.25 ÷ (200 ÷ 2 ÷ 1000) The above formula is 122.5 N. In addition, a load of 25 kg (245 N), which is 1/4 of the weight of the cart, is applied directly to the shaft. Since two forces form an angle of 90 °, the resultant force is 274 N. From the performance table, the allowable O.H.L. of a 0.1 kW 1/40 right angle hollow bore type is 830 N. In the case of a right angle hollow bore gearmotor of a flange mount type (one end is not borne by a pillow), the allowable O.H.L. needs to be corrected. * Refer to page 742. In this case, (55 + 20) ÷ (55 + 150) × 830 = 303. Consequently, 303 > 274, which is within the tolerance. * Please add values as needed if there are other factors that may affect the O.H.L. of the product, such as belt tension.
Result of model selection	Assuming that the selected model is a gearmotor without a brake and with a supply voltage of 24 V, the model that should be selected is the VF3SC15-40N100L2A.

Selection Process Steps and Examples

Selection Examples Battery Powered Gearmotors (SD Series)

Application ..... Cart Drive (four wheels)
Maximum Speed ..... 2 km/h
Outer Diameter of Tire ..... 200 mm
Total Weight ..... 300 kg
Load Point of O.H.L. ..... 150 mm from the flange surface
(Refer to the figure on the right)
Operation Time ..... 10 hours or more/day
Frequency of Startup ..... 70 times or less/day
Drag coefficient of Wheel 0.1

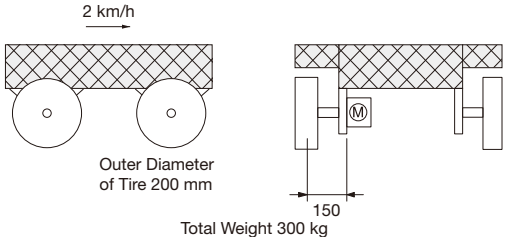

* The selection example shown here is an example when a dedicated drive separately sold is used.
Please utilize the calculation and selection tool on our website. (https://sentei.nissei-gtr.co.jp/english/calculation)
You may calculate the necessary power by inputting the usage conditions and the series on our website.

Selection Process Steps	Selection Examples
Determining the type (parallel shaft, right angle shaft)	Decide on the right angle shaft (F3S) based on axle mounting.
Determining the reduction ratio	2 km/h = 33333 mm/min Calculate the speed of the drive shaft at the maximum speed. 33333 ÷ (200 × π) = 53.1 r/min Since the rated speed of the motor shaft is 3000 r/min, 3000 ÷ 53.1 = 56.5 Since a variable speed motor is used, select a reduction ratio of 1/50, which is slightly smaller than the calculated value.
Checking the torque and the motor power	300 kg × 0.1 × (200 mm ÷ 2 ÷ 1000) × Sf × 9.8 Assuming that the service factor (Sf) is 1.25, the value of the equation shown above is 36.75 N·m. * (For the service factor, refer to page 738.) A gearmotor with an allowable output shaft torque of 36.75 N·m or more at a reduction ratio of 1/50 has a power of 0.4 kW or more.
Verifying the converted load moment of inertia on motor shaft	300 kg × (200 mm ÷ 2 ÷ 1000)^2× i^2× C By substituting 1 into the correction coefficient (C) and 1/50 into i, the value of the equation shown above is 0.0012 kg·m^2. * (For the correction coefficient of the moment of inertia, refer to [Table-2] on page 739.) From the table of allowable moments of inertia, the tolerance of 0.75 kW is 0.00138 kg·m^{2}the value is within the tolerance. * (For the table of allowable moments of inertia, refer to [Table-4] on page 739.) * (The calculation shown above is a simple example and ignores the moment of inertia of the wheel, the shaft, etc.)
Verifying the O.H.L.	The O.H.L. by the load torques is: 36.75 ÷ (200÷2÷1000) The above formula is 367.5 N. In addition, a load of 75 kg (735 N), which is 1/4 of the weight of the cart, is applied directly to the shaft. Since two forces form an angle of 90 °, the resultant force is 822 N. From the performance table, the allowable O.H.L. of a 0.75 kW, 1/50 right angle shaft (F3S) type is 2990 N. In the case of a right angle shaft gearmotor of a flange mount type (one end is not borne by a pillow), the allowable O.H.L. needs to be corrected. * Refer to page 743. In this case, (91 + 20) ÷ (91 + 150) × 2990 = 1377. Consequently, 1377 > 822, which is within the tolerance. * Please add values as needed if there are other factors that may affect the O.H.L. of the product, such as belt tension.
Result of model selection	Assuming that the selected model is a gearmotor without a brake and with a supply voltage of 48 V, Select the F3S30N50-SDM080L4AN.

Service Factor (Sf)

A gearmotor is designed under the condition of operating for ten hours/day under a light shock load. When you use a gearmotor under a condition of a longer operation time under a heavier shock load, correct the load torque based on the service factor shown in the table below.

[Table-1]

Load Condition	Service Factor (Sf)			Application Example
	Operating for less than three hours/ day	Operating for three to ten hours/day	Operating for more than ten hours/day	
Uniform load	1	1	1	Conveyors (uniform load), screens, agitators (low viscosity), water treatment machines (light load), machine tools (feed shafts), elevators, extruders, distillers
Light shock load	1	1	1.25	Conveyors (nonuniform or heavy load), agitators (high viscosity), machines for vehicles, water treatment machines (moderate load), hoists (light load), paper mills, feeders, food machines, pumps, sugar making machines, textile machines
Severe shock load	1	1.25	1.5	Hoists (heavy load), hammer mills, metal working machines, crushers, tumblers

Allowable Moment of Inertia/Acceleration Torque, Braking Torque (Motor Shaft Equivalent) Tp

Allowable Moment of Inertia J (J_A)

If a gearmotor with a high inertia load is operated intermittently, high torque may be instantaneously produced when it starts operating or stops, resulting in an unexpected accident.
Keep the level of the inertia of the application within the allowable value shown in the table below in accordance with the connection method and the frequency of startup.

■ Allowable Moment of Inertia J by Motor Power

(Motor shaft equivalent) [Table-1]

Power	Allowable Moment of Inertia J (kg·m²)
50 W	2×10^{-4}
0.1 kW	12.5×10^{-4}
0.2 kW	15×10^{-4}
0.4 kW	15×10^{-4}
0.75 kW	13.8×10^{-4}

Note: Converted equivalent moment of inertia on motor shaft
= moment of inertia of output shaft J x (reduction ratio)^2

■ Correction Coefficient of Allowable Moment of Inertia J According to Operating Conditions

[Table-2]

Connection Method	Frequency of Startup	Correction Coefficient
When no looseness occurs because of direct coupling etc.	70 times or less/day	1
	More than 70 times/day	1.5
When looseness occurs because of chain fastening etc.	70 times or less/day	2
	More than 70 times/day	3

Moment of Inertia (Motor Shaft Equivalent) of the Gearmotor by Power Jr

V Series <VG/VH/VF3 Types>

[Table-3]

Motor Type	Non-Brake				Brakemotor			
Motor Power	50 W	0.1 kW	0.2 kW	0.4 kW	50 W	0.1 kW	0.2 kW	0.4 kW
Moment of Inertia (kg·m²)	0.11×10^{-4}	0.65×10^{-4}	1.3×10^{-4}	2.5×10^{-4}	0.12×10^{-4}	0.77×10^{-4}	1.4×10^{-4}	3.0×10^{-4}

SD Series <APG/F3 Types>

[Table-4]

Motor Type	Non-Brake			Brakemotor		
Motor Power	0.75 kW			0.75 kW		
Frame Size	Parallel Shaft (APG)		Right Angle Shaft (F3)	Parallel Shaft (APG)		Right Angle Shaft (F3)
	22	28	30	22	28	30
Moment of Inertia (kg·m²)	1.0×10^{-4}		1.2×10^{-4}	1.1×10^{-4}		1.3×10^{-4}

Acceleration Torque, Braking Torque (Motor Shaft Equivalent) T_P

[Table-5]

Motor Type	Common to Motors with Brake and Motors without Brake				
Motor Power	50 W	0.1 kW	0.2 kW	0.4 kW	0.75 kW
Acceleration Torque (N·m)	0.32	0.66	1.24	2.61	4.77
Braking Torque (N·m)	0.32	0.66	1.24	2.61	4.77

Note: The values shown in the table above are those when a dedicated drive sold separately is used.

Method for Calculating the Moment of Inertia

■ Rotor's Moment of Inertia J

When the center of rotation is aligned with the center of gravity		When the center of rotation is not aligned with the center of gravity	
	SI Units		SI Units
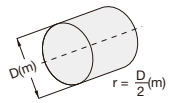 Weight M (kg)	$J = \frac{1}{2} Mr^2$ (kg·m²)	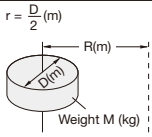 Weight M (kg)	$J = \frac{1}{2} Mr^2 + MR^2$ (kg·m²)
r1= D/2 (m) r2= d/2 (m) 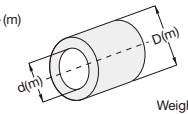 Weight M (kg)	$J = \frac{1}{2} M(r_1^2 + r_2^2)$ (kg·m²)	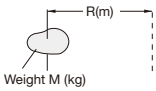 Weight M (kg)	(When the size is negligible) $J = MR^2$ (kg·m²)

■ Moment of Inertia J in Linear Motion

		SI Units
General case	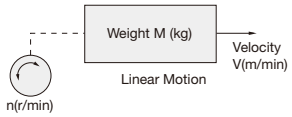	$J = \frac{1}{4} M \cdot \left(\frac{V}{\pi \cdot n}\right)^2$ (kg·m²)
In the case of horizontal linear motion (When moving an object with a lead screw)	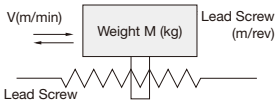	$J = \frac{1}{4} M \cdot \left(\frac{P}{\pi}\right)^2 = \frac{1}{4} M \cdot \left(\frac{V}{\pi \cdot n}\right)^2$ (kg·m²)
In the case of horizontal linear motion (Conveyor etc.)	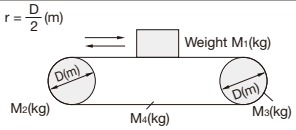	$J = M_1 r^2 + \frac{1}{2} M_2 r^2 + \frac{1}{2} M_3 r^2 + M_4 r^2$ (kg·m²)
In the case of vertical linear motion (Crane, winch, etc.)	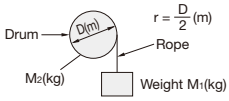	$J = M_1 r^2 + \frac{1}{2} M_2 r^2$ (kg·m²)

■ Conversion of the Moment of Inertia J When the Speed Ratio Is Available

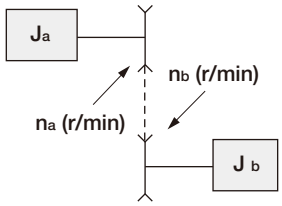

Convert the load's moment of inertia J_b into the equivalent value on the n_a shaft.

$$J = J_a + \left(\frac{n_b}{n_a}\right)^2 \times J_b$$

Overhung Load (O.H.L.)

An overhung load (O.H.L.) is a suspending load imposed on a shaft. When a chain, belt, gear, etc. is used to couple the gearbox shaft with the application, the resulting O.H.L. must be taken into consideration.

V Series <VG/VH/VF3 Types>

$$O.H.L. = \frac{T_{LE} \times K_1 \times K_2}{R} \ (N)$$

- T_{LE} : Equivalent output torque acting on the gearbox shaft (N·m)
- R : Pitch circle radius (m) of the sprocket, pulley, gear, etc. attached to gearbox shaft
- K_1 : Refer to the coefficient for the connection method [Table-1].
- K_2 : Refer to the coefficient for the load point [Table-2].

Be sure to make the O.H.L. value calculated from the equation shown above smaller than the allowable O.H.L. value listed in the performance table.

■ Coefficient K_1 [Table-1]

Connection method	K_1
Chain, timing belt	1.00
Gear	1.25
V-belt	1.50
Flat belt (with tension pulley)	2.25
Flat belt	3

■ Coefficient K_2 [Table-2]

Load Point	K_2
Base of the shaft	0.75
Middle of the shaft	1.00
End of Output Shaft	1.50

<Load Point>

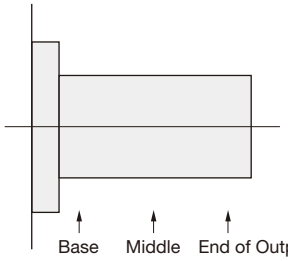

SD Series <APG Types>

$$O.H.L. = \frac{T_{LE}}{R} \times fb \times fw (N)$$

- T_{LE} : Equivalent output torque acting on the gearbox shaft (N·m)
- R : Pitch circle radius (m) of the sprocket, pulley, gear, etc. attached to gearbox shaft
- fb : Coefficient for the connection method [Table-3]
- fw : Coefficient for the load level [Table-4]

Be sure to make the O.H.L. value calculated from the equation shown above smaller than the corrected O.H.L. Fx. (Refer to page 742.)

■ Connection Coefficient fb [Table-3]

Connection Method	fb
Timing belt	1.2
Gear, chain	1.3
V-belt	2
Flat belt (with tension pulley)	3
Flat belt	4

■ Load Co-efficient fw [Table-4]

Load Level	fw
Smooth operation without shock	1.2
Ordinary operation	1.3
Operation with vibration or shock load	2

SD Series <F3 Type>

$$O.H.L. = \frac{T_{LE} \times K_1 \times K_2}{R} \ (N)$$

- T_{LE} : Equivalent output torque acting on the gearbox shaft (N·m)
- R : Pitch circle radius (m) of the sprocket, pulley, gear, etc. attached to gearbox shaft
- K_1 : Refer to the coefficient for the connection method [Table-5].
- K_2 : Refer to the coefficient for the load point [Table-6].

Be sure to make the O.H.L. value calculated from the equation shown above smaller than the allowable O.H.L. value listed in the performance table.

■ Coefficient K_1 [Table-5]

Connection method	K_1
Chain, timing belt	1.00
Gear	1.25
V-belt	1.50

■ Coefficient K_2 [Table-6]

Load Point	K_2
Base of the shaft	0.75
Middle of the shaft	1.00
End of Output Shaft	1.50

<Load Point>

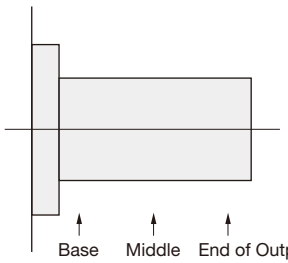

Correction Based on the O.H.L. Position

VF3/F3 Type

(1) Load point of O.H.L.
The load point of the allowable O.H.L. is calculated at 20 mm from the end of the output shaft.

(2)-1 Correcting the O.H.L. when one end of the output shaft is not borne by a pillow
If the load point L of the O.H.L. is more than 20 mm, correct using:

$$\text{Corrected O.H.L. (N)} = \frac{A+20}{A+L} \times \text{Allowable O.H.L. (N)}$$

(2)-2 Correction of the O.H.L. when one end of the output shaft is borne by a pillow is:

$$\text{Corrected O.H.L. (N)} = \frac{S}{S-L} \times \text{Allowable O.H.L. (N)}$$

■ Parameter A

Frame Size	A (mm)
15	71.5
25	90.5
30	98
35	114

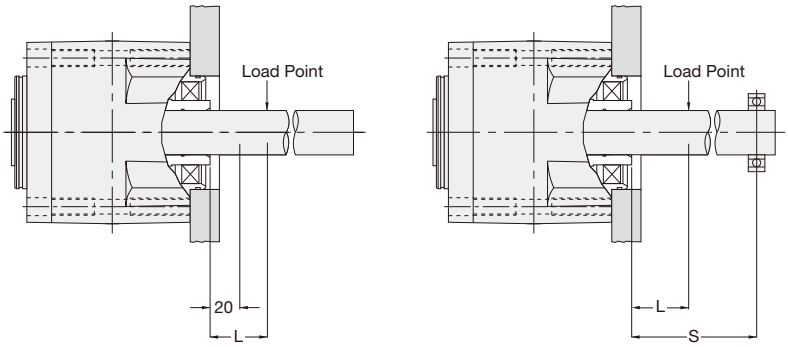

APG Type

(1) Point of O.H.L.
The allowable output shaft O.H.L. of a parallel shaft type (APG) is calculated at the middle of the shaft.

(2) Correcting the allowable output shaft O.H.L.
Correct the allowable output shaft O.H.L. with the equation shown below in accordance with the conditions under which the motor will be used.

$$Fx = Fc \times \frac{A}{A+L}$$

- Fx : Corrected O.H.L. (N)
- Fc : Allowable output shaft O.H.L. (N)
- A : Parameter (mm) [Table-1]
- L : O.H.L. load point (amount of displacement from the middle of the shaft) (mm)

■ Parameter A [Table-1]

Frame Size	A (mm)
22	38.5
28	43.5

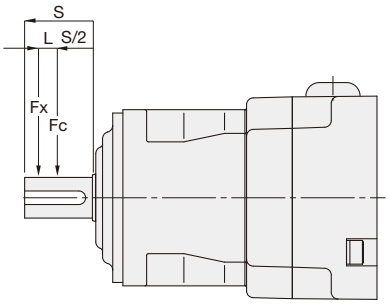

Thrust Load

Use the motor under a condition that meets the equation shown below.

Thrust load (N) x fw ≤ Allowable output shaft thrust load (N) [fw: coefficient based on the load level]

■ Load Co-efficient fw

Load Level	fw
Smooth operation without shock	1.2
Ordinary operation	1.3
Operation with vibration or shock load	2

Conformance of Dedicated Drives to Global Standards

■ Compliance with CE Marking (EMC Command)

This drive was tested in accordance with EN61800-3:2004+A1:2012 and complies with the EMC Command.
Install a device containing a drive in accordance with the following method so that it conforms to the EMC Command:
- Insert a surge absorber on the input side of the drive.
- Insert the clamp filter shown in the table below in the motor power leads (U/V/W).

The EMC of the final machine or device varies depending on the configurations, wiring, arrangement states, degree of risk, etc. of other control systems/appliances and electric parts to be used with the motor/drive. Thus, it is necessary for you to confirm its EMC by conducting EMC tests of the machine or device.

■ Compliance with KC Mark

This drive complies with the radio law of South Korea.
When using this product in South Korea, pay attention to the following:

Class A equipment (business-purpose broadcast and communication equipment)

This device is business-purpose equipment that generates electromagnetic waves (Class A), and is intended for use in locations other than households.
Sellers and users must be mindful of this.

This product complies with the radio law of South Korea on condition that the following countermeasures for EMC will be taken. Correctly implement the countermeasures for EMC before use.
- Insert a surge absorber on the input side of the drive.
  Please use the recommended surge absorber listed in the table below. We have evaluated conformity to surge immunity with this combination.
- Shield power cable and signal cables. In this operation, minimize the length of these cables.
  Separate the power cable and the signal cables as far away from each other as possible, and avoid parallel wiring and bundling.
  If these cables cannot be separated for some inevitable reason, please cross them.
- Radiation noise can be further suppressed if the drive is installed inside a sealed metallic control panel.
  In addition, separate the metal plate and the control panel body from the power line, and securely ground them with the thickest and shortest possible wire.

Recommended surge absorber

Manufacturer	Model
OTOWA ELECTRIC CO., LTD.	LT-C12G801W

Clamp filter (option)

Manufacturer	Model
TDK Corporation	OP-ZCAT

Note: This clamp filter is available only for the SD Series.

Precautions for Use

Installation Locations

Series	V	SD	
Protective Structure	IP30	IP40/IP44	IP65
Ambient Temperature	0 °C to 40 °C	0 °C to 40 °C	0 °C to 40 °C
Ambient Humidity	85 % RH max (No Condensation)	85 % RH max (No Condensation)	100 % RH max (No Condensation)
Altitude	1,000 m max	1,000 m max	1,000 m max
Installation Environment	A well ventilated place free from corrosive gas, explosive gas, vapor and/or chemicals Not to be exposed to direct rain. Not to be exposed to direct sunlight. The brake should not be exposed to water, dust, oil/grease, or oil mist. Models with water protection rating IPX0 shall not be exposed directly to water.		A place free from corrosive gas, explosive gas, and/or vapor Not to be exposed to strong rain and wind. Not to be exposed to direct sunlight. Not to be used underwater, environments with exposure to high pressure water splashes, and exposure to cleansing chemicals.

Installation Surface

Fasten a foot mount or flange mount type gearmotor to a vibration-free, machined, flat surface using four bolts. Adjust the flatness of the installation surface to 0.3 mm or less for the V Series, and to 0.1 mm or less for the SD Series. For the flatness of the installation surfaces for right angle hollow bore types, refer to page 997 as well.

Installation Orientation

All models adopt a grease lubrication method and can therefore be installed in any orientation.

Connection with an Application

V Series

1. H_7 fit is recommended for a hole for a coupling, sprocket, pulley, gear, etc. to be attached to the gearbox shaft.
2. In direct coupling, accurately align the center of the gearbox shaft and that of the mating shaft.
3. In chain or gear engagement, keep the gearbox shaft and the mating shaft parallel accurately to each other, and install the device so that the line connecting the centers of both shafts is perpendicular to the shafts.
4. When attaching a coupling or application to the output shaft, do not apply strong impacts using a hammer or similar tool. The bearing may be damaged and may cause abnormal sound, vibrations, or damage.

SD Series

1. In direct coupling
   Install the gearmotor so that the center of its shaft and that of the shaft of the application are aligned with each other.
2. In chain, belt, or gear engagement etc.
   - In any connection method, install the gearmotor so that its shaft and the shaft of the application are accurately parallel to each other and the centerline of the sprocket or pulley is perpendicular to the shafts.
   - If a load acts on the end of the output shaft, excessive force may be applied to the output shaft and cause cracks in the case etc. Thus, slip a sprocket, pulley, gear, etc. over the output shaft all the way to the base of the output shaft to bring the point of action of the load as close to the gearbox as possible.
   - When operating the gearmotor with a belt engaged, take care not to apply excessive force to the bearing by giving the belt more tension than necessary in order to prevent slippage.
   - When operating the gearmotor with a chain engaged, strong impact force may be produced at the start of operation and adversely affect the gearbox and the application if the chain is loose. Thus, pay attention to the tension of the chain.

Precautions for Operation

1. Be sure to operate the gearmotor with the load torque, the load moment of inertia J {GD^2}, and the O.H.L. kept within the tolerances.
2. CW and CCW rotations by plucking adversely affects the gearmotor and the application. To prevent it, temporarily stop the gearmotor, and then start it in the reverse direction.
3. Do not perform withstand voltage tests that apply 12 V or a higher voltage to the built-in sensor of the motor.
4. Take care to keep the surface temperature of the drive below 80 °C.
5. Take care to keep the surface temperature of the motor below 90 °C.
6. Do not use the gearmotor in an explosive environment. Failure to follow this precaution may result in an explosion, ignition of fire, fire, electric shock, injury, or damage to the equipment.
7. Do not operate the product where it is exposed to water, corrosive or flammable gas, or near combustible material. Failure to follow this precaution may result in a fire or accident.
8. Take care not to allow water, oil, and grease to adhere to the brake. Failure to follow this precaution may result in falling or runaway accident due to the decrease of the brake torque.
9. Connect the wires to the input supply power, the motor, and the drive correctly and securely. Failure to follow this precaution may result in damage to the equipment.
10. Transportation, installation, piping, wiring, operation, handling, maintenance, and inspections must be performed by personnel having expertise and skills. Failure to follow this precaution may result in an explosion, ignition of fire, fire, electric shock, injury, or damage to the equipment.
11. When using the gearmotor for an application that may directly cause harm to human bodies, such as personnel transportation equipment, provide the equipment with a protective device to ensure safety. Failure to follow this precaution may result in an accident with casualties or damage to the equipment.
12. When using the gearmotor for lifting equipment, provide the equipment with a safety device to prevent falling. Failure to follow precaution may result in an accident with casualties or damage to the equipment.
13. Use our drive in combination with a designated motor. If the drive is used in combination with a motor other than a designated one, the equipment may get damaged, or a fire may occur.
14. Do not touch the drive and the motor during energization and soon after the power is turned off because they may be hot. Failure to follow this precaution may result in burns.
15. If an abnormality occurs, immediately stop the operation. Failure to follow this precaution may result in injury or fire.
16. Do not put combustible materials around the gearmotor. Failure to follow this precaution may result in a fire.
17. Do not touch the rotary parts of the motor. Failure to follow this precaution may result in injury.
18. Connectors are not waterproof. For the extension of motor cables and waterproof connectors, please contact us.
19. Before using the gearmotor, carefully read through the Instruction Manual and other attached documents to familiarize yourself with correct use.
20. Regenerative energy will be fed to the power supply unit through this drive.
    When using a load that generates regenerative energy, the customer is required to take appropriate measures for the power supply unit. Failure to follow this precaution may cause a malfunction of or damage to the drive or an accident.
21. During regenerative operation, such as lifting operation or deceleration, do not disconnect the gearmotor from the battery in a state where the main power supply (+) and the control power supply (⊕) are connected.
    Failure to follow this precaution may cause a malfunction of or damage to the drive or an accident.
    If it is necessary to turn off the power during operation for a reason such as power shutdown due to an emergency stop, turn off only the main power supply (+).

MEMO

Option

BATTERY POWERD GEAR MOTOR

P.748 Torque Arm
P.749 Output Shaft Tapping (Threading)
P.749 Motor Shaft Extension (No Encoder)
P.751 Encoders

Option

Torque Arm

Battery powered Gearmotor V Series

■ F3S Type/VF3S Type

● Frame Size 15

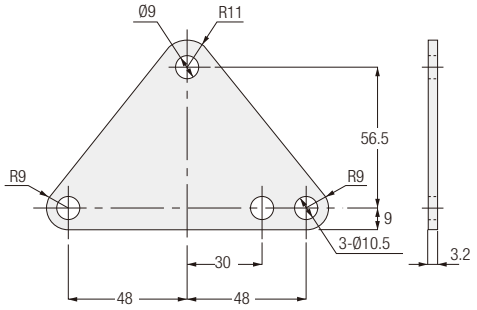

TAF2S-15

● Frame Sizes 25 to 35

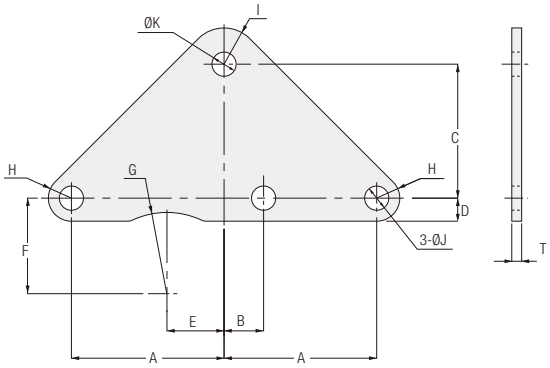

Part No.	Applicable Frame Size	Power	Applicable Reduction Ratio	A	B	C	D	E	F	G	H	I	J	K	T	Weight (kg)
TAF2S-15	15	0.1 kW	1/10 to 1/160	—	—	—	—	—	—	—	—	—	—	—	—	0.1
TAF3S-25-2	25	0.2 kW	1/10 to 1/60	60	27	61	10.5	16.5	43.5	R37	R10.5	R15	11	9	3.2	0.2
TAF3S-30-2	30	0.4 kW	1/10 to 1/60	69.5	26.5	70	10.5	21.5	48	R41.5	R10.5	R15	11	11	4.5	0.3
TAF3S-30-3		0.2 kW	1/80 to 1/240	78	14	70	12	32	46	R41.5	R12	R16.5	13.5	13.5	6	0.4
TAF3S-35-3	35	0.4 kW	1/80 to 1/240	97	11	94	15	43	54	R46.5	R15	R22.5	17.5	17.5	9	1.2

● Torque Arm Specifications

Part No.	Applicable Frame Size	Power	Applicable Reduction Ratio	Material	Surface Treatment	Color
TAF2S-15	15	0.1 kW	1/10 to 1/160	SS400	Trivalent Chromate	Surface Treatment Color (White-based Color)
TAF3S-25-2	25	0.2 kW	1/10 to 1/60			
TAF3S-30-2	30	0.4 kW	1/10 to 1/60			
TAF3S-30-3		0.2 kW	1/80 to 1/240			
TAF3S-35-3	35	0.4 kW	1/80 to 1/240			

Output Shaft Tapping (Threading)

The output shaft of the parallel shaft Type is tapped to the dimensions shown in the table below (Note 1), but the output shafts of other types are not tapped. If you desire output shaft tapping, we will prepare an output shaft manufactured to the dimensions shown in the table below. Designate these dimensions wherever possible at the time of design. To order tapping, enter “X40” at the end of the model name.

Model example: Standard specification VHLC28L-80N200L2A ⇒ Output shaft with standard VHLC28L-80N200L2AX40

Note 1: The mark “●” in the table indicates a standard stock item. In addition,“▲” indicates that a lead time of about full 10 days is required.
Note 2: For lead time, prices, and other details, please contact your nearest Sales Office.

Shaft Diameter (Frame Size)	Size × Pitch × Depth (mm)	VG Type (Parallel Shaft)	VH Type (Right Angle Shaft)			VF3F Type (Right Angle Shaft)		
			L Shaft	R Shaft	T Shaft	L Shaft	R Shaft	T Shaft
12/15	M5 × 0.8 × 12	●	Not Available	Not Available	Not Available	Not Available	Not Available	Not Available
18	M6 × 1.0 × 15	●	●	●	●	▲	▲	▲
22/28	M8 × 1.25 × 20	With Output Shaft Tapping	●	●	▲	●	▲	▲
32	M10 × 1.5 × 25		●	●	▲	●	▲	▲

Motor Shaft Extension (No Encoder)

An encoder can be attached to the rear of the motor with the specifications shown in the table below. If you require this option, please place an order with the appropriate option code shown in the table below.

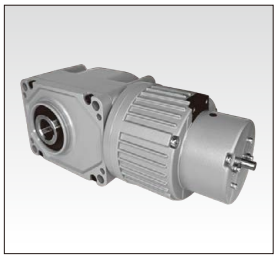

■ Target Models

Battery Powered Gearmotors
0.1 kW to 0.4 kW * Except VG/VH Types of 0.1 kW with 1/80 or above reduction ratio

Option	Option Code
X	X8

Model example: Standard specification VGLD22-80N200L4A ⇒ Motor shaft extension VGLD22-80N200L4AXX8

■ Motor Shaft Extension Specifications

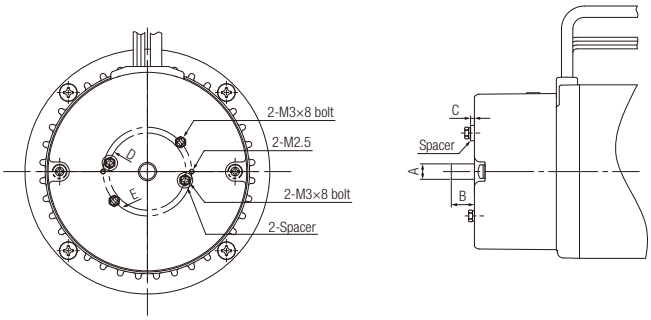

Motor Power	A	B	C	D	E
0.1 kW	8	12	2	40	46
0.2 kW					
0.4 kW					

The bolts are upset type bolts.

■ Product Outline Dimensions

When the shaft is extended, the overall length of the motor will increase For details, please refer to the table shown below.

●0.1 kW

VG type

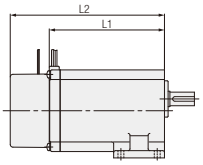

[Figure-1]

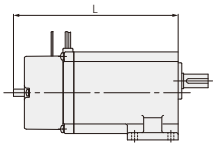

[Figure-2]

Motor Power	Standard type [Figure-1]		Motor Shaft Extension [Figure-2]
	No Brake L1	Brakemotor L2	Common to No brake/brakemotor L
15	129	170	181.5

VH type

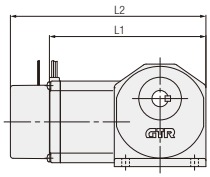

[Figure-1]

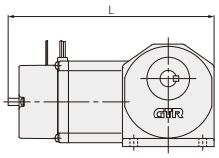

[Figure-2]

Motor Power	Standard type [Figure-1]		Motor Shaft Extension [Figure-2]
	No Brake L1	Brakemotor L2	Common to No brake/brakemotor L
18	174.5	215.5	227

VF3S type

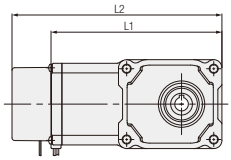

[Figure-1]

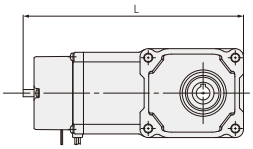

[Figure-2]

Motor Power	Standard type [Figure-1]		Motor Shaft Extension [Figure-2]
	No Brake L1	Brakemotor L2	Common to No brake/brakemotor L
15	190.5	231.5	243

VF3F type

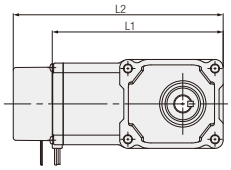

[Figure-1]

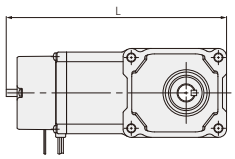

[Figure-2]

Motor Power	Standard type [Figure-1]		Motor Shaft Extension [Figure-2]
	No Brake L1	Brakemotor L2	Common to No brake/brakemotor L
18	190.5	231.5	243

●0.2 kW, 0.4 kW

VG type / VH type / VF3S type / VF3F type

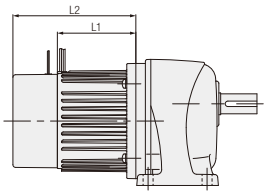

[Figure-3]

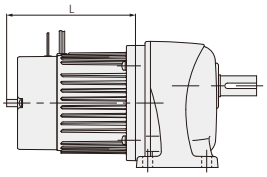

[Figure-4]

Motor Power	Standard type [Figure-3]		Motor Shaft Extension [Figure-4]
	No Brake L1	Brakemotor L2	Common to No brake/brakemotor L
0.2 kW	67	111	123
0.4 kW	89.5	135.5	142

Encoders

An encoder can be attached to the rear of the motor with the specifications shown in the table below. If you require this option, please place an order with the appropriate option code shown in the table below.

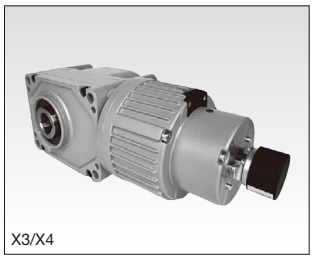
X3/X4

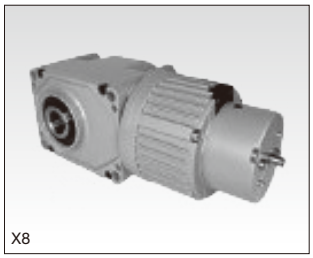
X8

■ Target Models

Battery Powered Gearmotors
0.1 kW to 0.4 kW * Except VG/VH Types of 0.1 kW with 1/80 or above reduction ratio

■ Encoder Specifications

Option	Option Code	Specification	
		Number of Pulses	Output Method
X	X3	1024 p/r	A/B/Z Line driver
X	X4	1024 p/r	A/B/Z Open collector
X	X8	–	Encoder-less shaft alignment

Model example: Standard specification VGLD22-80N200L4A ⇒ With an encoder VGLD22-80N200L4AXX3

■ Electrical Specifications

		X3	X4
Supply Voltage		4.5 to13.2 VDC	4.5 to 30 VDC
Current Consumption		30 mA MAX	30 mA MAX
Output Voltage	H Level	2.5 V or more	–
	L Level	0.5 V or below	0.5 V or below (at maximum sink)
Maximum Draw-in Current		20 mA	40 mA
Maximum Response Frequency		120 kHz	120 kHz
Rise and Fall Time		100 ns MAX	1 μs MAX

■ Connector Specifications

X3		
Hirose Electric DF3-9S-2C		
Terminal No.	Color	Connection
1	Red	Vcc
2	Black	0V
3	Green	Sig A
4	Blue	Sig $\overline{A}$
5	White	Sig B
6	Gray	Sig $\overline{B}$
7	Yellow	Sig Z
8	Orange	Sig $\overline{Z}$
9	Black	Shield

X4		
Hirose Electric DF3-6S-2C		
Terminal No.	Color	Connection
1	Red	Vcc
2	Black	0V
3	Blue	Sig A
4	White	Sig B
5	Yellow	Sig Z
6	Black	Shield

■ Waveform Specifications

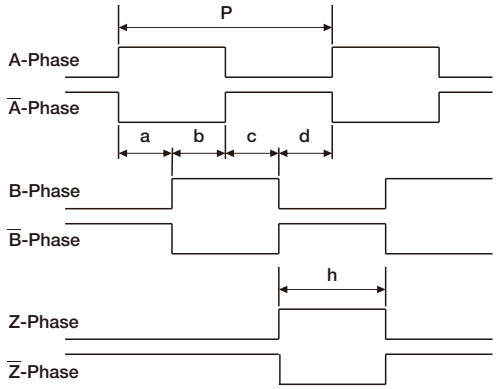

Signal A, B a, b, c, d = (P/4) ± (P/8)
Duty = (P/2) ± (P/4)
Signal Z (P/4) ≤ h ≤ (3P/4)

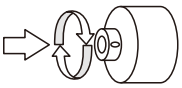

Motor Power	Overall length increment (L)	
	No Brake	Brakemotor
0.1kW	75.5	34.5
0.2kW	75.5	34.5
0.4kW	75.5	29.5

■ Product Appearance Dimensions

When an encoder is installed, the overall length of the motor will increase.
For details, please refer to the table shown below.

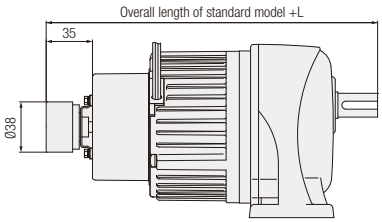

Gearmotors General Catalog

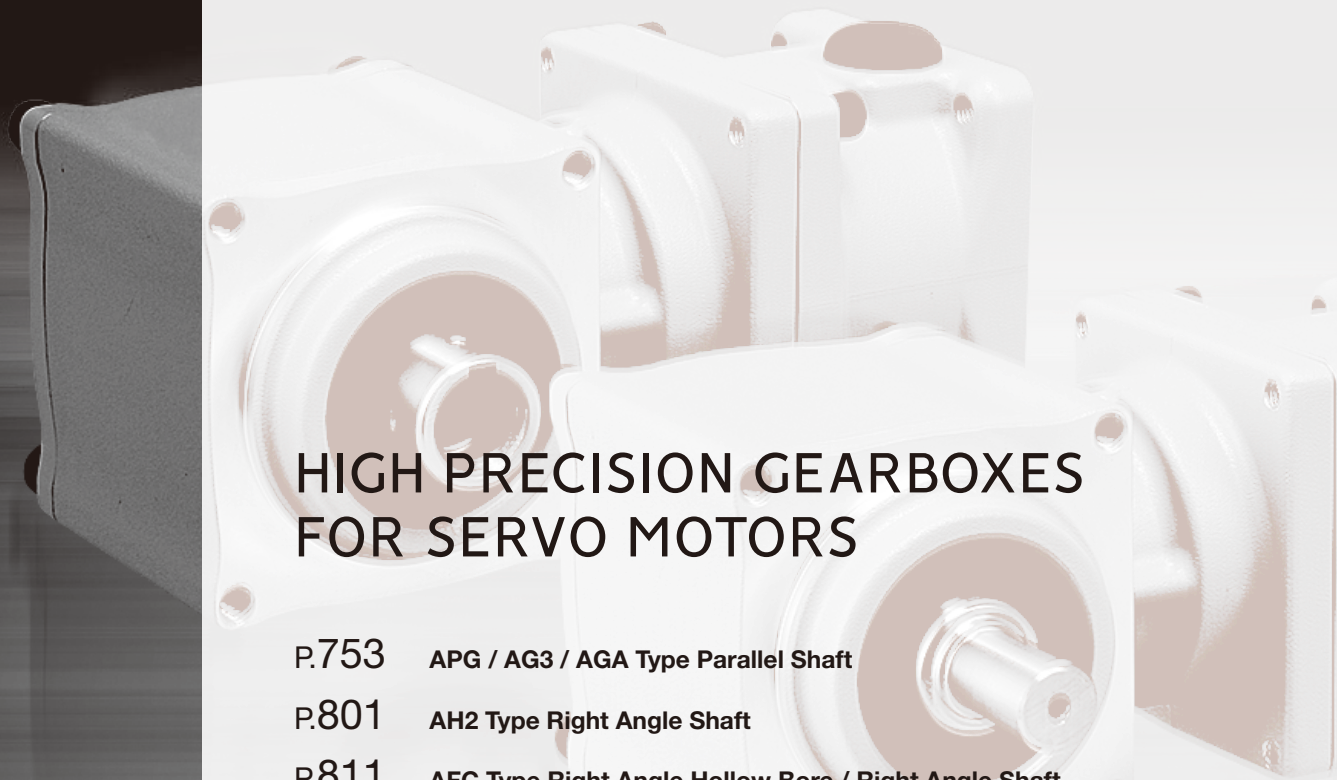

HIGH PRECISION GEARBOXES FOR SERVO MOTORS

P.753 **APG / AG3 / AGA Type Parallel Shaft**

P.801 **AH2 Type Right Angle Shaft**

P.811 **AFC Type Right Angle Hollow Bore / Right Angle Shaft**

P.845 **AF3 Type Concentric Right Angle Hollow Bore / Concentric Right Angle Shaft**

P.885 **Technical Documentation**

P.951 **Option**

APG/ AG3/ AGA Type

Parallel Shaft

Model and Type Codes

Standard Model Lineup

P.760 HIGH PRECISION GEARBOXES FOR SERVO MOTORS

1. Compact High Precision Gearboxes for Servo Motors

1-1. Performance Tables

1-2. Drawings

1-3. Low Temperature Startup Characteristics (No Load Running Torque (Input Shaft))

P.784 2. Low Backlash High Precision Gearboxes for Servo Motors

2-1. Performance Tables

2-2. Drawings

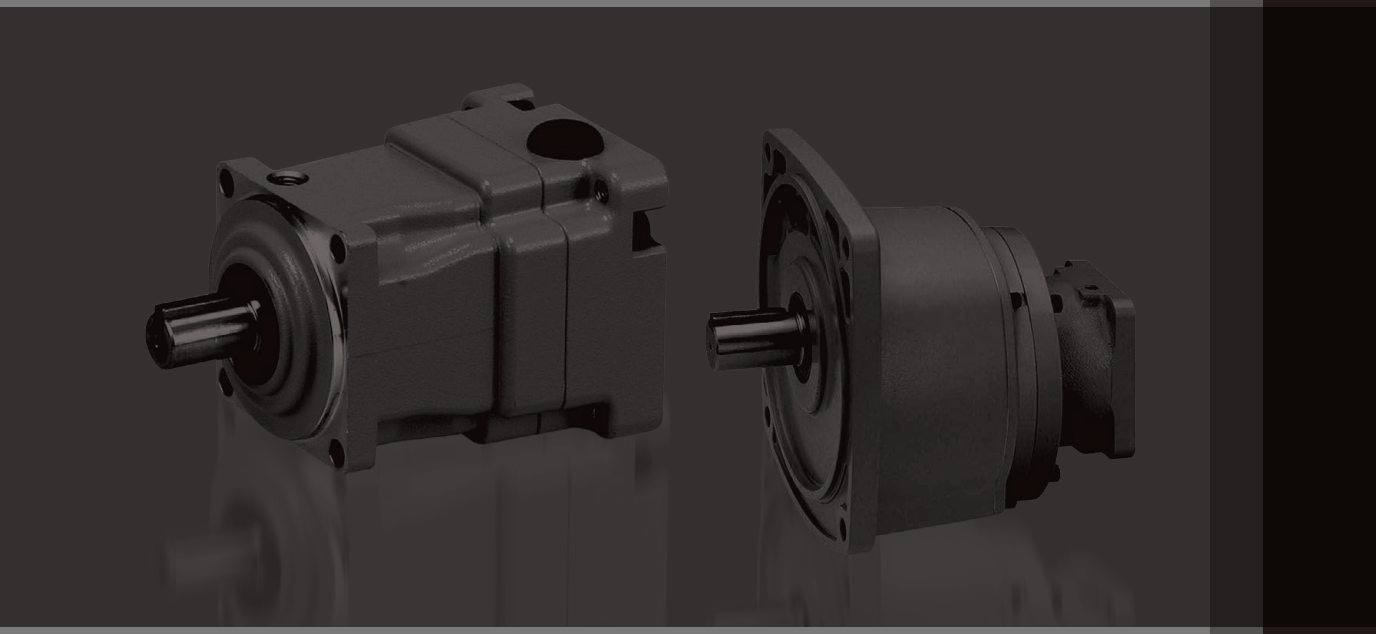

Model and Type Codes

APG Type

Mounting Type	Motor Type	Frame Size	Shaft Arrangement		Reduction Ratio	Backlash	Motor Power Class	Type	IP Protection Rating	Option
APG	Z	12	K	–	3	M	100	S1	N	X
APG	Z	18	J	–	30	Q	150	S1	N	
APG	Z	28	K	–	20	M	2000	K31	W	
①	②	③	④		⑤	⑥	⑦	⑧	⑨	⑩

①Mounting Type	APG : Parallel Shaft/Planetary Type (Compact Flange Mount)
②Motor Type	Z : High Precision Gearboxes for Servo Motor (Z Type Gearbox)
③Frame Size and Output Shaft Diameter	Output Shaft Diameter
④Shaft Arrangement	K : Output shaft with key and shaft end tapped
	J : Straight Shaft
⑤Reduction Ratio	3:1/3 20:1/20 100:1/100
⑥Backlash	M : Backlash 3 arc min
	Q : Backlash 15 arc min
⑦Motor Power Class	100 : 100 W Class
	150 : 150 W Class
	200 : 200 W Class
	400 : 400 W Class
	600 : 600 W Class
	750 : 750 W Class
	1000 : 1000 W Class
	1500 : 1500 W Class
	2000 : 2000 W Class
	3000 : 3000 W Class
⑧Flange Type for Servo Motor Mounting	S1/K13, etc.
⑨IP Protection Rating	N : IP44 Class
	W : IP65 Class
⑩Option	Blank : Standard Specification
	X : Special Specification Code

Model and Type Codes

AG3 Type

Mounting Type	Motor Type	Frame Size	Shaft Arrangement		Reduction Ratio	Backlash	Motor Power Class	Type	Option	Option Code
AG3L	Z	22		–	30	L	200	S1		
AG3K	Z	32		–	30	L	750	S4		
AG3F	Z	40		–	60	L	2000	K21	X	B3
①	②	③	④		⑤	⑥	⑦	⑧	⑨	⑩

①Mounting Type	AG3L : Parallel Shaft (Foot Mount)
	AG3F : Parallel Shaft (Flange Mount)
	AG3K : Parallel Shaft (Small Flange Mount, Up to Frame Sizes 32)
②Motor Type	Z : High Precision Gearboxes for Servo Motor (Z Type Gearbox)
③Frame Size and Output Shaft Diameter	Output Shaft Diameter
④Shaft Arrangement	Blank
⑤Reduction Ratio	5:1/5 to 240:1/240
⑥Backlash	L : Low Backlash
⑦Motor Power Class	100 : 100 W Class
	200 : 200 W Class
	400 : 400 W Class
	750 : 750 W Class
	2000 : 2000 W Class
⑧Flange Type for Servo Motor Mounting	F1/S1/K31, etc.
⑨Option	Blank : Standard Specification
	X : Special Specification Code
⑩Option Code (Note 1)	Position Code of Wrench Hole for Input Shaft Joint Tightening For details, please refer to the list of option codes on page 949.

Note 1: The option code will not be shown in the nomenclature on the nameplate. But it will be shown in the Option code row of the nameplate.

AGA Type

Mounting Type	Motor Type	Frame Size	Shaft Arrangement		Reduction Ratio	Backlash	Motor Power Class	Type	Option	Option Code
AGAL	Z	50		–	100	L	2000	K21		
AGAL	Z	50		–	160	L	2000	K32	X	B3
①	②	③	④		⑤	⑥	⑦	⑧	⑨	⑩

①Mounting Type	AGAL : Parallel Shaft (Foot Mount) (50-frame only)
②Motor Type	Z : High Precision Gearboxes for Servo Motor (Z Type Gearbox)
③Frame Size and Output Shaft Diameter	Output Shaft Diameter
④Shaft Arrangement	Blank
⑤Reduction Ratio	100:1/100 to 200:1/200
⑥Backlash	L : Low Backlash
⑦Motor Power Class	2000 : 2000 W Class
⑧Flange Type for Servo Motor Mounting	F1/S1/K31, etc.
⑨Option	Blank : Standard Specification
	X : Special Specification Code
⑩Option Code (Note 1)	Position Code of Wrench Hole for Input Shaft Joint Tightening For details, please refer to the list of option codes on page 949.

Note 1: The option code will not be shown in the nomenclature on the nameplate. But it will be shown in the Option code row of the nameplate.

APG Type Backlash 3 arc min/15 arc min Specifications

Motor Power Class	Frame Size	Shaft Arrangement	Reduction Ratio	Backlash
100 W	12, 18	K, J	1/3, 1/5, 1/10, 1/15, 1/20, 1/30, 1/40, 1/50, 1/60, 1/100	M (3 arc min), Q (15 arc min)
150 W	12, 18	K, J	1/3, 1/5, 1/10, 1/15, 1/20, 1/30, 1/40, 1/50, 1/60	M (3 arc min), Q (15 arc min)
200 W	12, 18, 22	K, J	1/3, 1/5, 1/10, 1/15, 1/20, 1/30, 1/40, 1/50, 1/60, 1/100	M (3 arc min), Q (15 arc min)
400 W	12, 18, 22, 28	K, J	1/3, 1/5, 1/10, 1/15, 1/20, 1/30, 1/40, 1/50, 1/60, 1/100	M (3 arc min), Q (15 arc min)
600 W	18, 22, 28	K, J	1/3, 1/5, 1/10, 1/15, 1/20, 1/30, 1/40, 1/50, 1/60	M (3 arc min), Q (15 arc min)
750 W	18, 22, 28	K, J	1/3, 1/5, 1/10, 1/15, 1/20, 1/30, 1/40, 1/50, 1/60	M (3 arc min), Q (15 arc min)
1000 W	22, 28	K, J	1/3, 1/5, 1/10, 1/15, 1/20, 1/30, 1/40, 1/50	M (3 arc min), Q (15 arc min)
1500 W	22, 28	K, J	1/3, 1/5, 1/10, 1/15, 1/20, 1/30	M (3 arc min), Q (15 arc min)
2000 W	22, 28	K, J	1/3, 1/5, 1/10, 1/15, 1/20	M (3 arc min), Q (15 arc min)
3000W	28	K, J	1/3, 1/5, 1/10	M (3 arc min), Q (15 arc min)

AG3 Type Low Backlash Specification

Motor Power Class	Frame Size	Reduction Ratio	Backlash
100 W	18	1/5, 1/10, 1/15, 1/20, 1/25, 1/30, 1/40, 1/50	L (Low Backlash)
	22	1/60, 1/80, 1/100, 1/120, 1/160, 1/200	
200 W	18	1/5, 1/10, 1/15, 1/20, 1/25	L (Low Backlash)
	22	1/30, 1/40, 1/50, 1/60, 1/80	
	28	1/100, 1/120, 1/160, 1/200	
400 W	22	1/5, 1/10, 1/15, 1/20, 1/25	L (Low Backlash)
	28	1/30, 1/40, 1/50, 1/60, 1/80	
	32	1/100, 1/120, 1/160, 1/200	
750 W	28	1/5, 1/10, 1/15, 1/20, 1/25	L (Low Backlash)
	32	1/30, 1/40, 1/50, 1/60, 1/80	
	40	1/100, 1/120, 1/160, 1/200	
2000 W	32	1/5, 1/10, 1/15, 1/20, 1/25	L (Low Backlash)
	40	1/30, 1/40, 1/50, 1/60, 1/80	
	50	1/100, 1/120, 1/160, 1/200	

Note 1: ( ) indicates a limited torque type. Please make sure to check the allowable torque in the performance table.
Note 2: For the precision of low backlash types, refer to the performance table.
Note 3: Select a 2000 W class gearbox for 1000 W and 1500 W servo motors.
Note 4: AG3 is not available in 1 arc min and 3 arc min specifications.
Note 5: Please note that small flange mount (AG3K) is available only for frame sizes 18 to 32.

AG3 Type Low Backlash Specification

Motor Power Class	Frame Size	Reduction Ratio				Backlash
2000 W	50	1/100	1/120	1/160	1/200	L (Low Backlash)

Note 1: ( ) indicates a limited torque type. Please make sure to check the allowable torque in the performance table.
Note 2: For the precision of low backlash types, refer to the performance table.
Note 3: Select a 2000 W class gearbox for 1000 W and 1500 W servo motors.
Note 4: AG3 is not available in 1 arc min and 3 arc min specifications.

1. Compact High Precision Gearboxes for Servo Motors

1-1. Performance Tables

APG Type <Backlash 3 arc min/15 arc min Specifications> Performance Table by Reduction Ratio

[Notes]
- The instantaneous input speed is 7000 r/min. The rated input speed is 3000 r/min.
- Allowable output shaft O.H.L. is the value at the middle of the output shaft.
- The rotational direction of the output shaft is the same as the input rotational direction of the motor.
- For the continuous rated input torque, please refer to page 948. In addition, for the servo motor-based motor rated output torque, please refer to page 920.
- The key dimensions and tolerances for output shafts conform to JIS B 1301-1996 (plain form).
- The internal moment of inertia (input shaft equivalent) is the value for the gearbox alone, and does not include the motor's moment of inertia.
- The allowable average torque is the continuous allowable torque value.
- Adjust the gain so that the inertial load on the output shaft side does not vibrate during acceleration and deceleration.
- M in the Precision column means backlash 3 arc min, and Q means backlash 15 arc min.
- When the gearbox is used at low temperature, the no load running torque at a startup will increase. Please refer to page 781 for cold start characteristics.

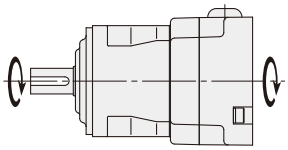

■ At an input speed of 3000 r/min

Mounting Type	Output Shaft Diameter	Shaft Arrangement	Nominal Reduction Ratio	Actual Reduction Ratio	Precision	Power Class	Allowable Average Torque (3000 r/min)	Allowable Peak Torque of Startup/Stop	Allowable Output Shaft O.H.L.	Allowable Output Shaft Thrust Load	Internal Moment of Inertia (Input Shaft Equivalent)	Drawings
							N·m	N·m	N	N	$\times 10^{-4}$kg·m^2	
APGZ	12	K/J	1/3	1/3	M/Q	100	3.4	11.9	420	210	0.163	P.762, P.763
APGZ	12	K/J	1/3	1/3	M/Q	150	3.4	11.9	420	210	0.163	
APGZ	12	K/J	1/3	1/3	M/Q	200	3.4	11.9	420	210	0.158	
APGZ	12	K/J	1/3	1/3	M/Q	400	3.4	11.9	420	210	0.158	
APGZ	18	K/J	1/3	1/3	M/Q	600	6.4	22	820	410	0.768	P.766 to P.769
APGZ	18	K/J	1/3	1/3	M/Q	750	6.4	22	820	410	0.898	
APGZ	22	K/J	1/3	1/3	M/Q	1000	17.2	60	1000	500	3.233	P.773
APGZ	22	K/J	1/3	1/3	M/Q	1500	17.2	60	1000	500	3.188	
APGZ	22	K/J	1/3	1/3	M/Q	2000	17.2	60	1000	500	3.188	
APGZ	28	K/J	1/3	1/3	M/Q	3000	25.8	90	1450	725	4.213	P.776, P.778 to P.780
APGZ	12	K/J	1/5	1/5	M/Q	100	5.7	20	510	255	0.142	P.762, P.763
APGZ	12	K/J	1/5	1/5	M/Q	150	5.7	20	510	255	0.142	
APGZ	12	K/J	1/5	1/5	M/Q	200	5.7	20	510	255	0.137	
APGZ	12	K/J	1/5	1/5	M/Q	400	5.7	20	510	255	0.137	
APGZ	18	K/J	1/5	1/5	M/Q	600	10.7	37	980	490	0.610	P.766 to P.769
APGZ	18	K/J	1/5	1/5	M/Q	750	10.7	37	980	490	0.740	
APGZ	22	K/J	1/5	1/5	M/Q	1000	28.6	100	1200	600	2.693	P.773
APGZ	22	K/J	1/5	1/5	M/Q	1500	28.6	100	1200	600	2.649	
APGZ	22	K/J	1/5	1/5	M/Q	2000	28.6	100	1200	600	2.649	
APGZ	28	K/J	1/5	1/5	M/Q	3000	43.0	151	1700	850	2.875	P.776, P.778 to P.780
APGZ	12	K/J	1/10	1/10	M/Q	100	5.1	18	650	325	0.135	P.762, P.763
APGZ	12	K/J	1/10	1/10	M/Q	150	5.1	18	510	255	0.135	
APGZ	12	K/J	1/10	1/10	M/Q	200	5.1	18	650	325	0.130	
APGZ	18	K/J	1/10	1/10	M/Q	400	21.5	75	1200	600	0.145	P.766 to P.769
APGZ	18	K/J	1/10	1/10	M/Q	600	21.5	75	1200	600	0.558	
APGZ	18	K/J	1/10	1/10	M/Q	750	21.5	75	1200	600	0.687	
APGZ	22	K/J	1/10	1/10	M/Q	1000	57.3	186	1300	650	2.534	P.773
APGZ	22	K/J	1/10	1/10	M/Q	1500	57.3	186	1300	650	2.489	
APGZ	22	K/J	1/10	1/10	M/Q	2000	57.3	186	1300	650	2.489	
APGZ	28	K/J	1/10	1/10	M/Q	3000	85.9	258	2150	1075	2.502	P.776, P.778 to P.780
APGZ	12	K/J	1/15	1/15	M/Q	100	7.6	25	784	392	0.134	P.764, P.765
APGZ	12	K/J	1/15	1/15	M/Q	150	7.6	25	784	392	0.134	
APGZ	12	K/J	1/15	1/15	M/Q	200	7.6	25	784	392	0.128	
APGZ	18	K/J	1/15	1/15	M/Q	400	16.2	57	1470	735	0.142	P.766 to P.769
APGZ	22	K/J	1/15	1/15	M/Q	600	30.4	106	1950	975	0.210	P.770 to P.772
APGZ	22	K/J	1/15	1/15	M/Q	750	30.4	106	1950	975	0.693	
APGZ	28	K/J	1/15	1/15	M/Q	1000	81.2	284	2450	1225	2.796	P.776, P.778 to P.780

1-1. Performance Tables

Mounting Type	Output Shaft Diameter	Shaft Arrangement	Nominal Reduction Ratio	Actual Reduction Ratio	Precision	Power Class	Allowable Average Torque (3000 r/min)	Allowable Peak Torque of Startup/Stop	Allowable Output Shaft O.H.L.	Allowable Output Shaft Thrust Load	Internal Moment of Inertia (Input Shaft Equivalent)	Drawings
							N·m	N·m	N	N	$\times 10^{-4}$kg·m^2	
APGZ	28	K/J	1/15	1/15	M/Q	1500	81.2	284	2450	1225	2.752	P.776, P.778 to P.780
APGZ	28	K/J	1/15	1/15	M/Q	2000	81.2	284	2450	1225	2.752	
APGZ	12	K/J	1/20	1/20	M/Q	100	10.2	31	840	420	0.133	P.764, P.765
APGZ	12	K/J	1/20	1/20	M/Q	150	10.2	31	840	420	0.133	
APGZ	12	K/J	1/20	1/20	M/Q	200	10.2	31	840	420	0.128	
APGZ	18	K/J	1/20	1/20	M/Q	400	21.6	76	1570	785	0.137	P.766 to P.769
APGZ	22	K/J	1/20	1/20	M/Q	600	40.6	142	2150	1075	0.192	P.770 to P.772
APGZ	22	K/J	1/20	1/20	M/Q	750	40.6	142	2150	1075	0.675	
APGZ	28	K/J	1/20	1/20	M/Q	1000	108.2	379	2700	1350	2.751	P.776, P.778 to P.780
APGZ	28	K/J	1/20	1/20	M/Q	1500	108.2	379	2700	1350	2.706	P.776, P.778 to P.780
APGZ	28	K/J	1/20	1/20	M/Q	2000	108.2	379	2700	1350	2.706	
APGZ	12	K/J	1/30	1/30	M/Q	100	6.7	20	910	455	0.132	P.764, P.765
APGZ	18	K/J	1/30	1/30	M/Q	150	32.5	97	1750	875	0.139	P.766 to P.769
APGZ	18	K/J	1/30	1/30	M/Q	200	32.5	97	1750	875	0.134	
APGZ	18	K/J	1/30	1/30	M/Q	400	32.5	97	1750	875	0.134	
APGZ	22	K/J	1/30	1/30	M/Q	600	60.9	183	2450	1225	0.183	P.770 to P.772
APGZ	22	K/J	1/30	1/30	M/Q	750	60.9	183	2450	1225	0.666	
APGZ	28	K/J	1/30	1/30	M/Q	1000	121.8	365	3100	1550	2.728	P.776, P.778 to P.780
APGZ	28	K/J	1/30	1/30	M/Q	1500	121.8	365	3100	1550	2.684	P.766 to P.769
APGZ	18	K/J	1/40	1/40	M/Q	100	19.1	67	1860	930	0.133	P.770 to P.772
APGZ	18	K/J	1/40	1/40	M/Q	150	19.1	67	1860	930	0.133	
APGZ	18	K/J	1/40	1/40	M/Q	200	19.1	67	1860	930	0.128	
APGZ	22	K/J	1/40	1/40	M/Q	400	40.7	142	2550	1275	0.143	P.775, P.777
APGZ	28	K/J	1/40	1/40	M/Q	600	108.2	379	3450	1725	0.148	P.766 to P.769
APGZ	28	K/J	1/40	1/40	M/Q	750	108.2	379	3450	1725	0.660	
APGZ	28	K/J	1/40	1/40	M/Q	1000	108.2	379	3450	1725	2.610	
APGZ	18	K/J	1/50	1/50	M/Q	100	25.5	89	1860	930	0.133	P.770 to P.772
APGZ	18	K/J	1/50	1/50	M/Q	150	25.5	89	1860	930	0.133	
APGZ	18	K/J	1/50	1/50	M/Q	200	25.5	89	1860	930	0.128	
APGZ	22	K/J	1/50	1/50	M/Q	400	50.9	178	2550	1275	0.141	P.775, P.777
APGZ	28	K/J	1/50	1/50	M/Q	600	135.3	406	2550	1275	0.144	P.776, P.778 to P.780
APGZ	28	K/J	1/50	1/50	M/Q	750	135.3	406	3520	1760	0.656	
APGZ	28	K/J	1/50	1/50	M/Q	1000	135.3	406	3520	1760	2.606	
APGZ	18	K/J	1/60	1/60	M/Q	100	28.6	93	1860	930	0.133	P.766 to P.769
APGZ	18	K/J	1/60	1/60	M/Q	150	28.6	93	1860	930	0.133	
APGZ	18	K/J	1/60	1/60	M/Q	200	28.6	93	1860	930	0.127	
APGZ	22	K/J	1/60	1/60	M/Q	400	61.1	189	2550	1275	0.141	P.770 to P.772
APGZ	28	K/J	1/60	1/60	M/Q	600	121.8	365	3520	1760	0.143	P.775, P.777
APGZ	28	K/J	1/60	1/60	M/Q	750	121.8	365	3520	1760	0.654	
APGZ	18	K/J	1/100	1/100	M/Q	100	20.7	62	1860	930	0.132	P.766 to P.769
APGZ	22	K/J	1/100	1/100	M/Q	200	44.6	134	2550	1275	0.140	P.770 to P.772
APGZ	28	K/J	1/100	1/100	M/Q	400	95.5	286	3520	1760	0.140	P.775, P.777

1-2. Drawings

APG Type Parallel Shaft Shaft Diameter 12 Backlash 3 arc min/15 arc min Specifications

<Figure 1>

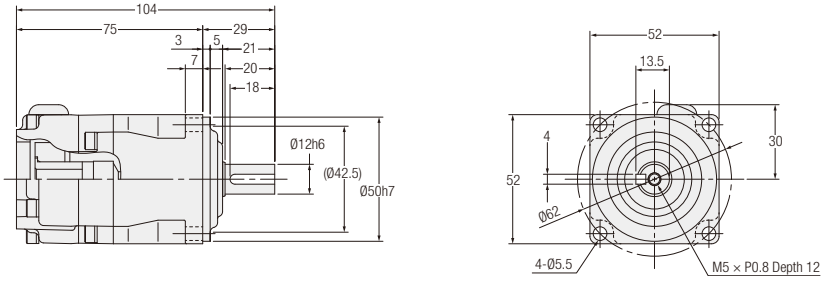

<Figure 2>

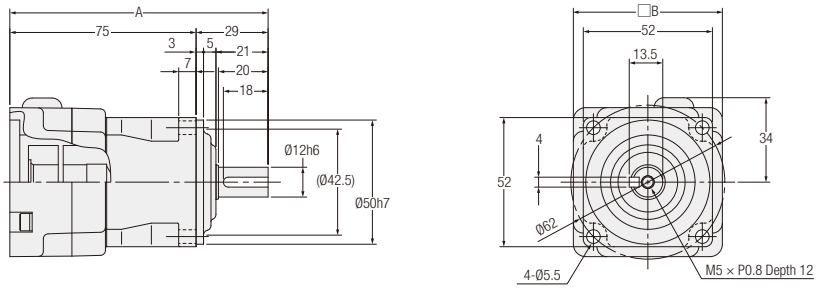

Motor Power Class	Shaft Arrangement	Ingress Protection Rating: IP44 Class	Ingress Protection Rating: IP65 Class	Reduction Ratio	Flange Type	Figure Number	Approx. Weight (kg)	A	B
100 W	K: Output shaft with Shaft end tapped	APGZ12K-***□100△N	APGZ12K-***□100△W	3, 5, 10	S1/S3	1	0.8	—	—
100 W		APGZ12K-***□100△N	APGZ12K-***□100△W	3, 5, 10	S6	2	0.8	104	55
150 W		APGZ12K-***□150△N	APGZ12K-***□150△W	3, 5, 10	S1	1	0.8	—	—
200 W		APGZ12K-***□200△N	APGZ12K-***□200△W	3, 5, 10	S1/S2/S3/S5	2	0.8	104	60
200 W		APGZ12K-***□200△N	APGZ12K-***□200△W	3, 5, 10	S6	2	0.8	104	55
200 W		APGZ12K-***□200△N	APGZ12K-***□200△W	3, 5, 10	S7	2	0.8	104	70
400 W		APGZ12K-***□400△N	APGZ12K-***□400△W	3, 5	S1/S3	2	0.8	104	60
400 W		APGZ12K-***□400△N	APGZ12K-***□400△W	3, 5	S6	2	0.8	104	55
400 W		APGZ12K-***□400△N	APGZ12K-***□400△W	3, 5	S7	2	0.8	104	70

Note: A reduction ratio will be indicated as *** in the nomenclature. In addition, backlash will be indicated as □, and a flange type will be indicated as △.
Note: Please refer to pages 892 to 900 for the detailed dimensions of the input shaft area.
Note: Please refer to page 760 for the performance table.

<Figure 3>

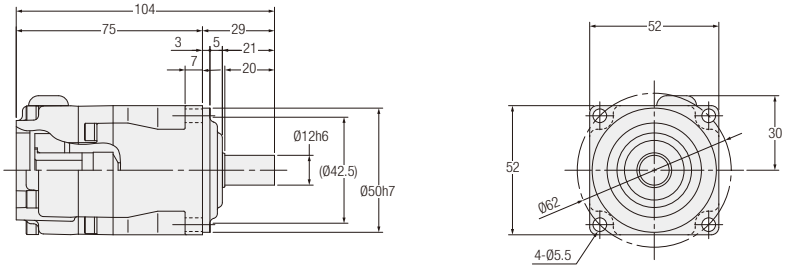

<Figure 4>

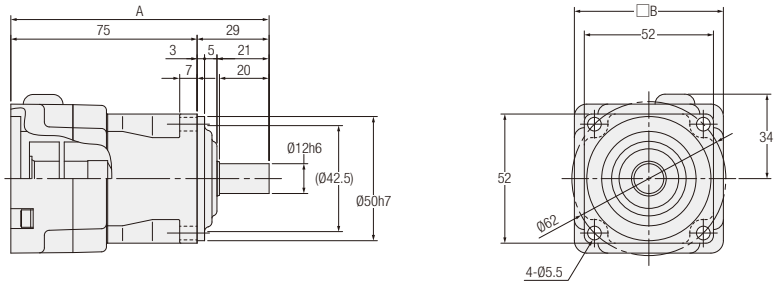

Motor Power Class	Shaft Arrangement	Ingress Protection Rating: IP44 Class	Ingress Protection Rating: IP65 Class	Reduction Ratio	Flange Type	Figure Number	Approx. Weight (kg)	A	B
100 W	J: Straight shaft	APGZ12J-∗∗∗□100△N	APGZ12J-∗∗∗□100△W	3, 5, 10	S1/S3	3	0.8	—	—
100 W		APGZ12J-∗∗∗□100△N	APGZ12J-∗∗∗□100△W	3, 5, 10	S6	4	0.8	104	55
150 W		APGZ12J-∗∗∗□150△N	APGZ12J-∗∗∗□150△W	3, 5, 10	S1	3	0.8	—	—
200 W		APGZ12J-∗∗∗□200△N	APGZ12J-∗∗∗□200△W	3, 5, 10	S1/S2/S3/S5	4	0.8	104	60
200 W		APGZ12J-∗∗∗□200△N	APGZ12J-∗∗∗□200△W	3, 5, 10	S6	4	0.8	104	55
200 W		APGZ12J-∗∗∗□200△N	APGZ12J-∗∗∗□200△W	3, 5, 10	S7	4	0.8	104	70
400 W		APGZ12J-∗∗∗□400△N	APGZ12J-∗∗∗□400△W	3, 5	S1/S3	4	0.8	104	60
400 W		APGZ12J-∗∗∗□400△N	APGZ12J-∗∗∗□400△W	3, 5	S6	4	0.8	104	55
400 W		APGZ12J-∗∗∗□400△N	APGZ12J-∗∗∗□400△W	3, 5	S7	4	0.8	104	70

Note: A reduction ratio will be indicated as ∗∗∗ in the nomenclature. In addition, backlash will be indicated as □, and a flange type will be indicated as △.
Note: Please refer to pages 892 to 900 for the detailed dimensions of the input shaft area.
Note: Please refer to page 760 for the performance table.

APG Type Parallel Shaft Shaft Diameter 12 Backlash 3 arc min/15 arc min Specifications

<Figure 1>

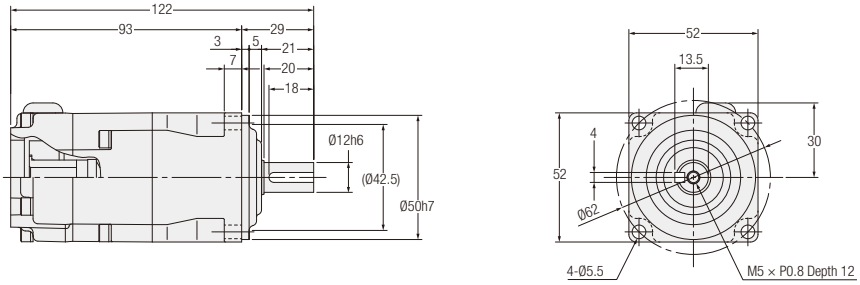

<Figure 2>

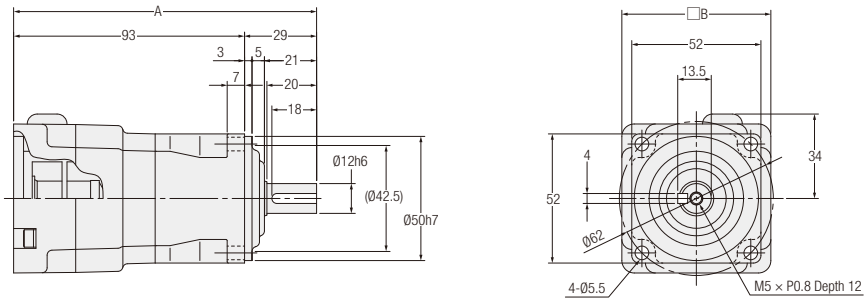

Motor Power Class	Shaft Arrangement	Ingress Protection Rating: IP44 Class	Ingress Protection Rating: IP65 Class	Reduction Ratio	Flange Type	Figure Number	Approx. Weight (kg)	A	B
100 W	K: Output shaft with Shaft end tapped	APGZ12K-✱✱✱□100△N	APGZ12K-✱✱✱□100△W	15, 20, 30	S1/S3	1	0.9	—	—
100 W		APGZ12K-✱✱✱□100△N	APGZ12K-✱✱✱□100△W	15, 20, 30	S6	2	0.9	122	55
150 W		APGZ12K-✱✱✱□150△N	APGZ12K-✱✱✱□150△W	15, 20	S1	1	0.9	—	—
200 W		APGZ12K-✱✱✱□200△N	APGZ12K-✱✱✱□200△W	15, 20	S1/S2/S3/S5	2	0.9	122	60
200 W		APGZ12K-✱✱✱□200△N	APGZ12K-✱✱✱□200△W	15, 20	S6	2	0.9	122	55
200 W		APGZ12K-✱✱✱□200△N	APGZ12K-✱✱✱□200△W	15, 20	S7	2	0.9	122	70

Note: A reduction ratio will be indicated as ✱✱✱ in the nomenclature. In addition, backlash will be indicated as □, and a flange type will be indicated as △.
Note: Please refer to pages 892 to 900 for the detailed dimensions of the input shaft area.
Note: Please refer to page 760 for the performance table.

<Figure 3>

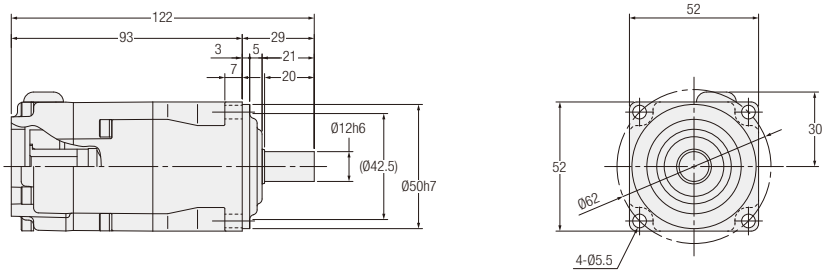

<Figure 4>

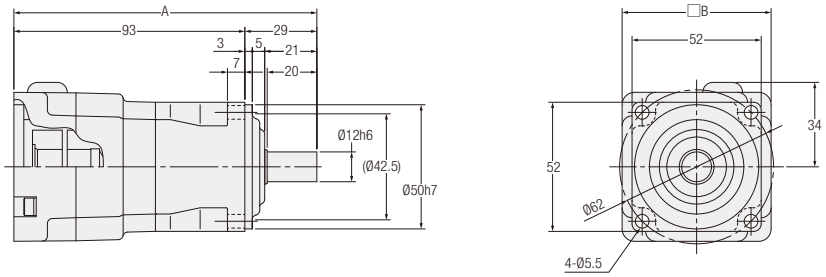

Motor Power Class	Shaft Arrangement	Ingress Protection Rating: IP44 Class	Ingress Protection Rating: IP65 Class	Reduction Ratio	Flange Type	Figure Number	Approx. Weight (kg)	A	B
100 W	J: Straight shaft	APGZ12J-∗∗∗□100△N	APGZ12J-∗∗∗□100△W	15, 20, 30	S1/S3	3	0.9	—	—
100 W		APGZ12J-∗∗∗□100△N	APGZ12J-∗∗∗□100△W	15, 20, 30	S6	4	0.9	122	55
150 W		APGZ12J-∗∗∗□150△N	APGZ12J-∗∗∗□150△W	15, 20	S1	3	0.9	—	—
200 W		APGZ12J-∗∗∗□200△N	APGZ12J-∗∗∗□200△W	15, 20	S1/S2/S3/S5	4	0.9	122	60
200 W		APGZ12J-∗∗∗□200△N	APGZ12J-∗∗∗□200△W	15, 20	S6	4	0.9	122	55
200 W		APGZ12J-∗∗∗□200△N	APGZ12J-∗∗∗□200△W	15, 20	S7	4	0.9	122	70

Note: A reduction ratio will be indicated as ∗∗∗ in the nomenclature. In addition, backlash will be indicated as □, and a flange type will be indicated as △.
Note: Please refer to pages 892 to 900 for the detailed dimensions of the input shaft area.
Note: Please refer to page 760 for the performance table.

APG Type Parallel Shaft Shaft Diameter 18 Backlash 3 arc min/15 arc min Specifications

<Figure 1>

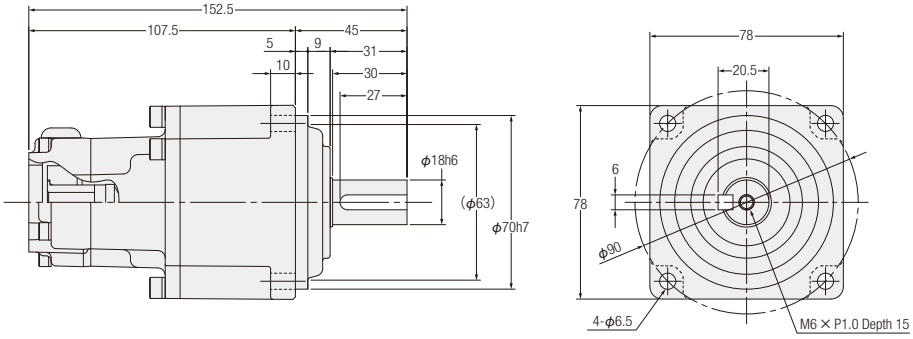

<Figure 2>

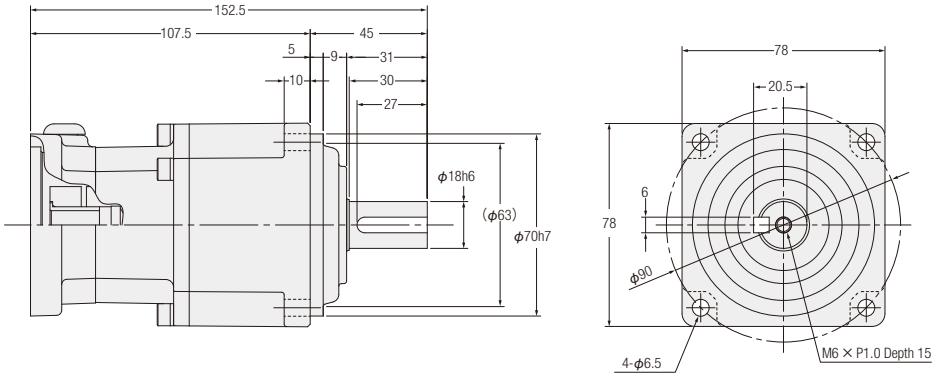

Motor Power Class	Shaft Arrangement	Ingress Protection Rating: IP44 Class	Ingress Protection Rating: IP65 Class	Reduction Ratio	Flange Type	Figure Number	Approx. Weight (kg)
100 W	K: Output shaft with Shaft end tapped	APGZ18K-∗∗∗□100△N	APGZ18K-∗∗∗□100△W	40, 50, 60, 100	S1/S3/S6	1	2.0
150 W		APGZ18K-∗∗∗□150△N	APGZ18K-∗∗∗□150△W	30, 40, 50, 60	S1	1	2.0
200 W		APGZ18K-∗∗∗□200△N	APGZ18K-∗∗∗□200△W	30, 40, 50, 60	S1/S2/S3/S5/S6	1	2.0
200 W		APGZ18K-∗∗∗□200△N	APGZ18K-∗∗∗□200△W	30, 40, 50, 60	S7	2	2.0
400 W		APGZ18K-∗∗∗□400△N	APGZ18K-∗∗∗□400△W	15, 20, 30	S1/S3/S6	1	2.0
400 W		APGZ18K-∗∗∗□400△N	APGZ18K-∗∗∗□400△W	15, 20, 30	S7	2	2.0

Note: A reduction ratio will be indicated as ∗∗∗ in the nomenclature. In addition, backlash will be indicated as □, and a flange type will be indicated as △.
Note: Please refer to pages 892 to 900 for the detailed dimensions of the input shaft area.
Note: Please refer to page 760 for the performance table.

<Figure 3>

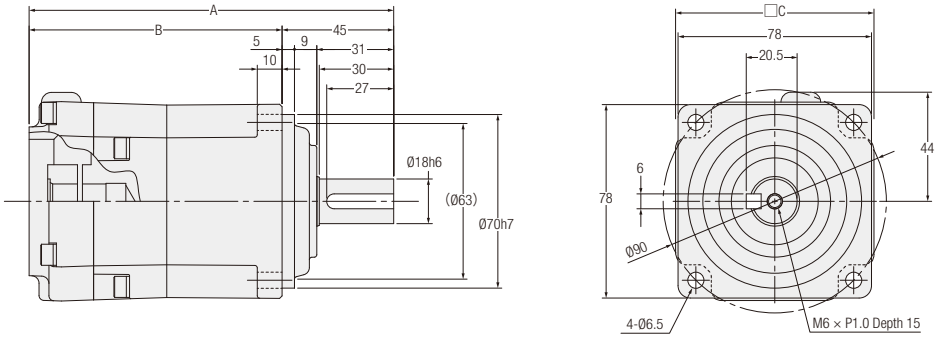

<Figure 4>

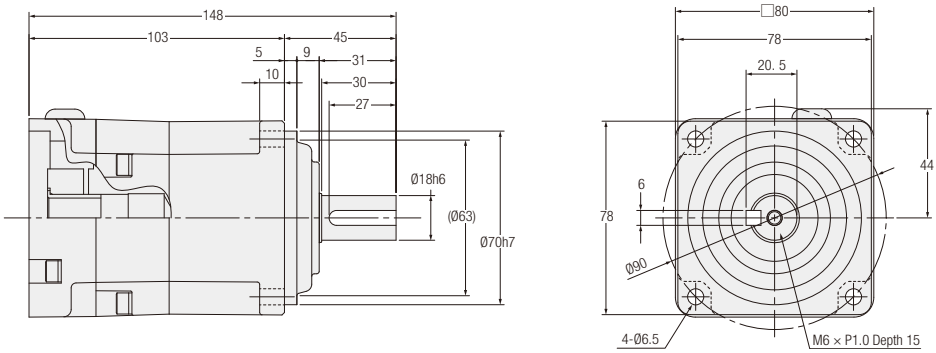

<Figure 5>

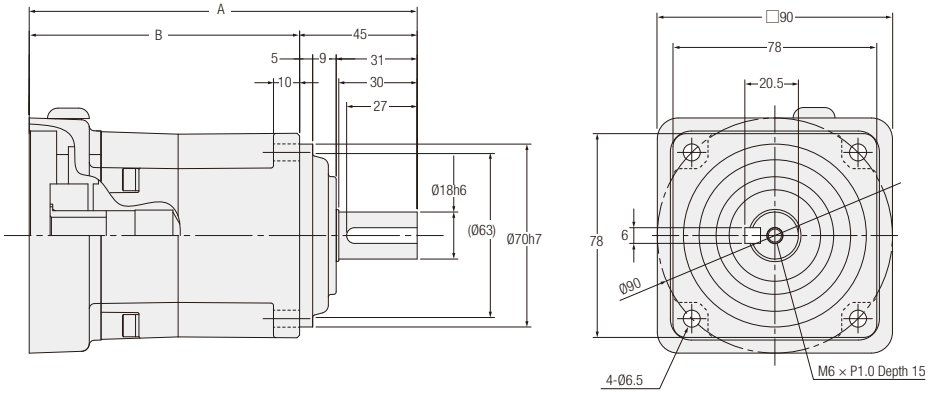

Motor Power Class	Shaft Arrangement	Ingress Protection Rating: IP44 Class	Ingress Protection Rating: IP65 Class	Reduction Ratio	Flange Type	Figure Number	Approx. Weight (kg)	A	B	C
400 W	K: Output shaft with Shaft end tapped	APGZ18K-∗∗∗□400△N	APGZ18K-∗∗∗□400△W	10	S1/S3	3	1.7	128	102	80
400 W		APGZ18K-∗∗∗□400△N	APGZ18K-∗∗∗□400△W	10	S6/S7	3	1.7	128	83	60
600 W		APGZ18K-∗∗∗□600△N	APGZ18K-∗∗∗□600△W	3, 5, 10	S1	3	2.0	147	103	60
750 W		APGZ18K-∗∗∗□750△N	APGZ18K-∗∗∗□750△W	3, 5, 10	S1/S2/S3/S4	4	2.2	—	—	—
750 W		APGZ18K-∗∗∗□750△N	APGZ18K-∗∗∗□750△W	3, 5, 10	F6/F7	5	2.2	153.5	108.5	—
750 W		APGZ18K-∗∗∗□750△N	APGZ18K-∗∗∗□750△W	3, 5, 10	S6	5	2.2	148.5	103.5	—
750 W		APGZ18K-∗∗∗□750△N	APGZ18K-∗∗∗□750△W	3, 5, 10	S9	5	2.2	148	103	—

Note: A reduction ratio will be indicated as ∗∗∗ in the nomenclature. In addition, backlash will be indicated as □, and a flange type will be indicated as △.
Note: Please refer to pages 892 to 900 for the detailed dimensions of the input shaft area.
Note: Please refer to page 760 for the performance table.

<Figure 6>

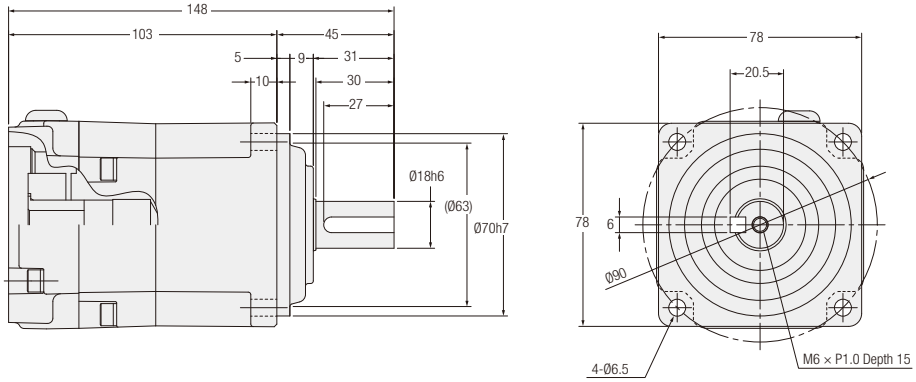

<Figure 7>

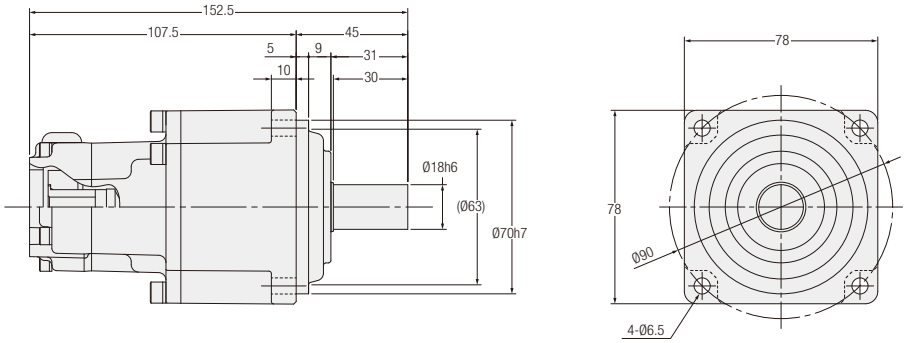

<Figure 8>

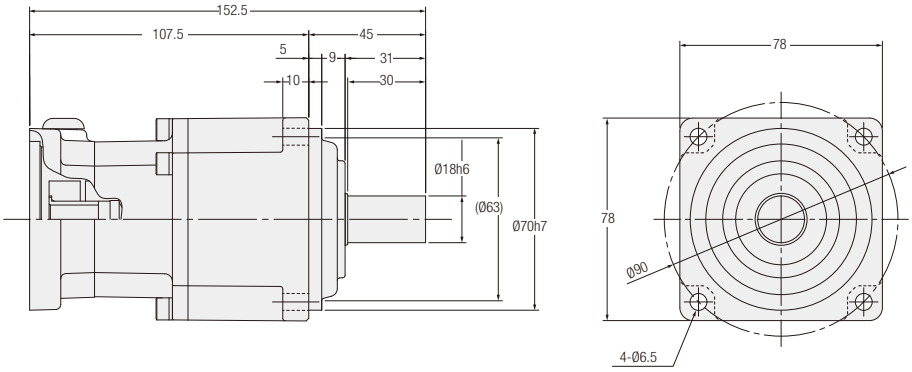

Motor Power Class	Shaft Arrangement	Ingress Protection Rating: IP44 Class	Ingress Protection Rating: IP65 Class	Reduction Ratio	Flange Type	Figure Number	Approx. Weight (kg)
750 W	K: Output shaft with Shaft end tapped	APGZ18K-∗∗∗□750△N	APGZ18K-∗∗∗□750△W	3, 5, 10	S8	6	2.2
100 W	J: Straight shaft	APGZ18J-∗∗∗□100△N	APGZ18J-∗∗∗□100△W	40, 50, 60, 100	S1/S3/S6	7	2.0
150 W		APGZ18J-∗∗∗□150△N	APGZ18J-∗∗∗□150△W	30, 40, 50, 60	S1	7	2.0
200 W		APGZ18J-∗∗∗□200△N	APGZ18J-∗∗∗□200△W	30, 40, 50, 60	S1/S2/S3/S5/S6	7	2.0
200 W		APGZ18J-∗∗∗□200△N	APGZ18J-∗∗∗□200△W	30, 40, 50, 60	S7	8	2.0
400 W		APGZ18J-∗∗∗□400△N	APGZ18J-∗∗∗□400△W	15, 20, 30	S1/S3/S6	7	2.0
400 W		APGZ18J-∗∗∗□400△N	APGZ18J-∗∗∗□400△W	15, 20, 30	S7	8	2.0

Note: A reduction ratio will be indicated as ∗∗∗ in the nomenclature. In addition, backlash will be indicated as □, and a flange type will be indicated as △.
Note: Please refer to pages 892 to 900 for the detailed dimensions of the input shaft area.
Note: Please refer to page 760 for the performance table.

<Figure 9>

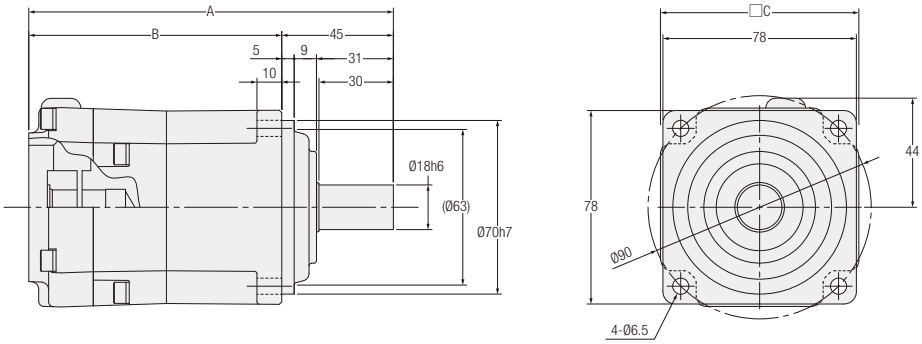

<Figure 11>

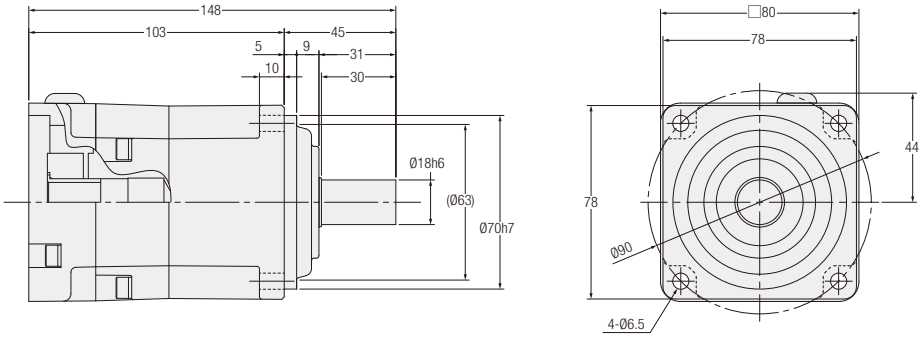

<Figure 11>

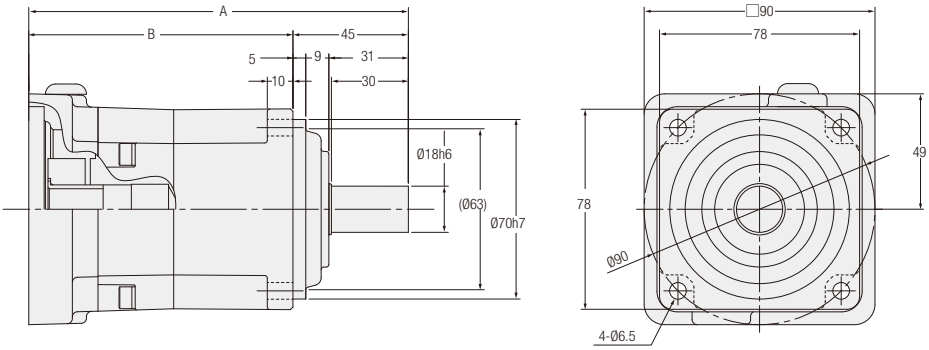

Motor Power Class	Shaft Arrangement	Ingress Protection Rating: IP44 Class	Ingress Protection Rating: IP65 Class	Reduction Ratio	Flange Type	Figure Number	Approx. Weight (kg)	A	B	C
400 W	J: Straight shaft	APGZ18J-✻✻✻□400△N	APGZ18J-✻✻✻□400△W	10	S1/S3	9	1.7	128	83	80
400 W		APGZ18J-✻✻✻□400△N	APGZ18J-✻✻✻□400△W	10	S6/S7	9	1.7	128	83	60
600 W		APGZ18J-✻✻✻□600△N	APGZ18J-✻✻✻□600△W	3, 5, 10	S1	9	2.0	147	103	60
750 W		APGZ18J-✻✻✻□750△N	APGZ18J-✻✻✻□750△W	3, 5, 10	S1/S2/S3/S4	10	2.2	—	—	—
750 W		APGZ18J-✻✻✻□750△N	APGZ18J-✻✻✻□750△W	3, 5, 10	S8	9	2.2	148	103	80
750 W		APGZ18J-✻✻✻□750△N	APGZ18J-✻✻✻□750△W	3, 5, 10	F6/F7	11	2.2	153.5	108.5	—
750 W		APGZ18J-✻✻✻□750△N	APGZ18J-✻✻✻□750△W	3, 5, 10	S6	11	2.2	—	—	—
750 W		APGZ18J-✻✻✻□750△N	APGZ18J-✻✻✻□750△W	3, 5, 10	S9	11	2.2	148	103	—

Note: A reduction ratio will be indicated as ✻✻✻ in the nomenclature. In addition, backlash will be indicated as □, and a flange type will be indicated as △.
Note: Please refer to pages 892 to 900 for the detailed dimensions of the input shaft area.
Note: Please refer to page 760 for the performance table.

APG Type Parallel Shaft Shaft Diameter 22 Backlash 3 arc min/15 arc min Specifications

<Figure 1>

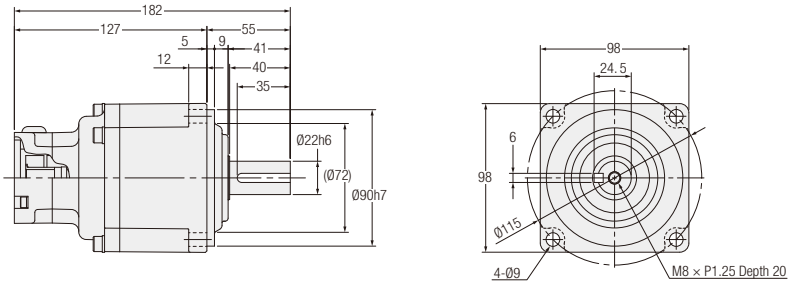

<Figure 2>

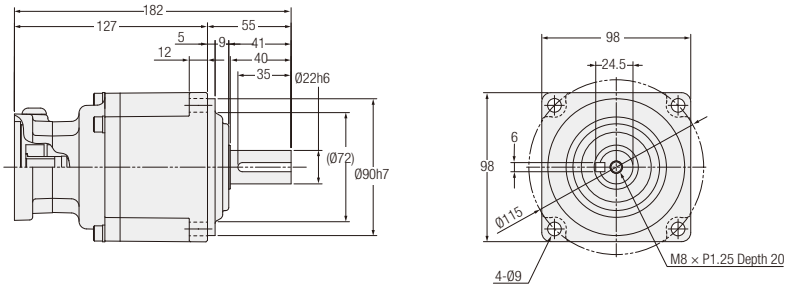

<Figure 3>

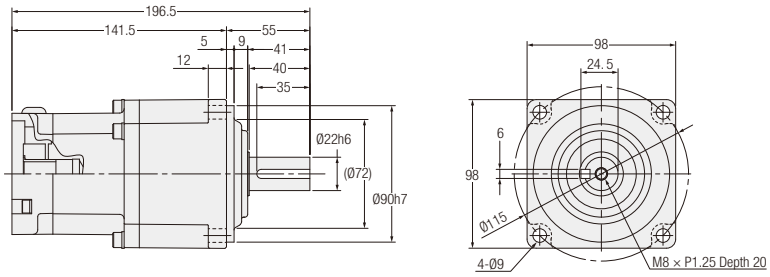

Motor Power Class	Shaft Arrangement	Ingress Protection Rating: IP44 Class	Ingress Protection Rating: IP65 Class	Reduction Ratio	Flange Type	Figure Number	Approx. Weight (kg)
200 W	K: Output shaft with Shaft end tapped	APGZ22K-∗∗∗□200△N	APGZ22K-∗∗∗□200△W	100	S1/S2/S3/S5/S6	1	3.9
200 W		APGZ22K-∗∗∗□200△N	APGZ22K-∗∗∗□200△W	100	S7	2	3.9
400 W		APGZ22K-∗∗∗□400△N	APGZ22K-∗∗∗□400△W	40, 50, 60	S1/S3/S6	1	3.9
400 W		APGZ22K-∗∗∗□400△N	APGZ22K-∗∗∗□400△W	40, 50, 60	S7	2	3.9
600 W		APGZ22K-∗∗∗□600△N	APGZ22K-∗∗∗□600△W	15, 20, 30	S1	1	3.9
750 W		APGZ22K-∗∗∗□750△N	APGZ22K-∗∗∗□750△W	15, 20, 30	S1/S2/S3/S4	3	4.0

Note: A reduction ratio will be indicated as ∗∗∗ in the nomenclature. In addition, backlash will be indicated as □, and a flange type will be indicated as △.
Note: Please refer to pages 892 to 900 for the detailed dimensions of the input shaft area.
Note: Please refer to page 760 for the performance table.

<Figure 4>

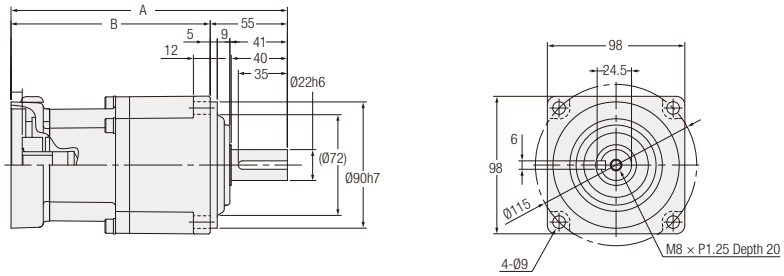

<Figure 5>

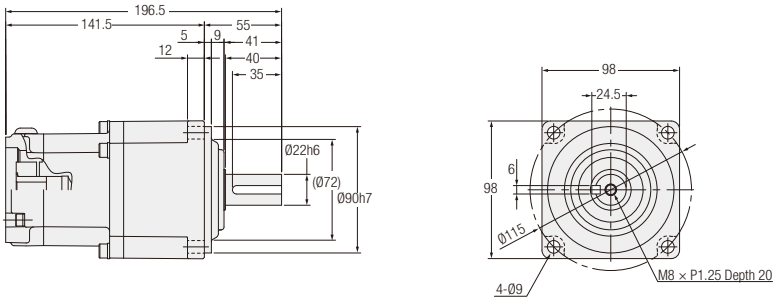

<Figure 6>

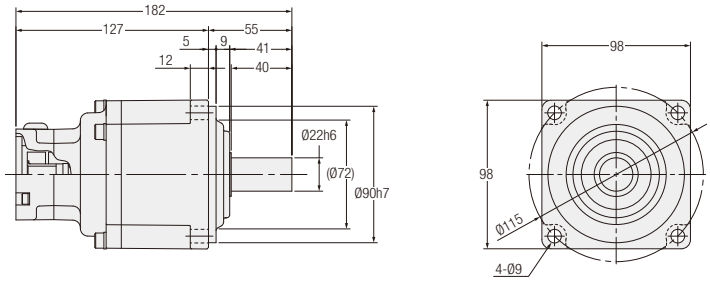

Motor Power Class	Shaft Arrangement	Ingress Protection Rating: IP44 Class	Ingress Protection Rating: IP65 Class	Reduction Ratio	Flange Type	Figure Number	Approx. Weight (kg)	A	B
750 W	K: Output shaft with Shaft end tapped	APGZ22K-∗∗∗□750△N	APGZ22K-∗∗∗□750△W	15, 20, 30	S6	4	4.0	197	142
750 W		APGZ22K-∗∗∗□750△N	APGZ22K-∗∗∗□750△W	15, 20, 30	S9	4	4.0	196.5	141.5
750 W		APGZ22K-∗∗∗□750△N	APGZ22K-∗∗∗□750△W	15, 20, 30	F6/F7	4	4.0	202	147
750 W		APGZ22K-∗∗∗□750△N	APGZ22K-∗∗∗□750△W	15, 20, 30	S8	5	4.0	—	—
200 W	J: Straight shaft	APGZ22J-∗∗∗□200△N	APGZ22J-∗∗∗□200△W	100	S1/S2/S3/ S5/S6	6	3.9	—	—
400 W		APGZ22J-∗∗∗□400△N	APGZ22J-∗∗∗□400△W	40, 50, 60	S1/S3/S6	6	3.9	—	—
600 W		APGZ22J-∗∗∗□600△N	APGZ22J-∗∗∗□600△W	15, 20, 30	S1	6	3.9	—	—

Note: A reduction ratio will be indicated as ∗∗∗ in the nomenclature. In addition, backlash will be indicated as □, and a flange type will be indicated as △.
Note: Please refer to pages 892 to 900 for the detailed dimensions of the input shaft area.
Note: Please refer to page 760 for the performance table.

<Figure 7>

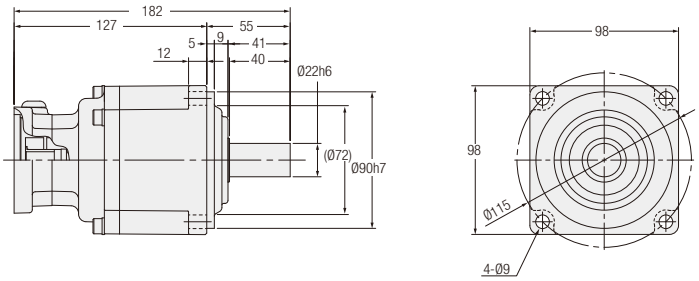

<Figure 8>

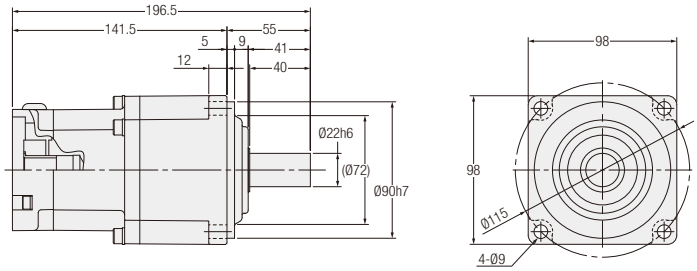

<Figure 9>

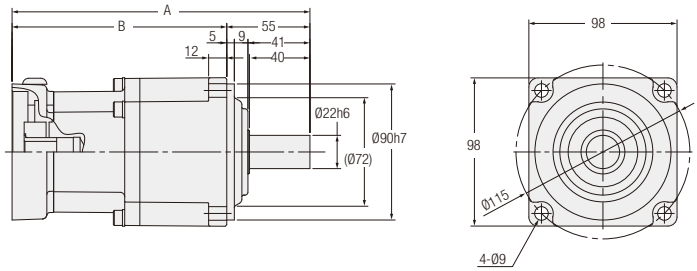

<Figure 10>

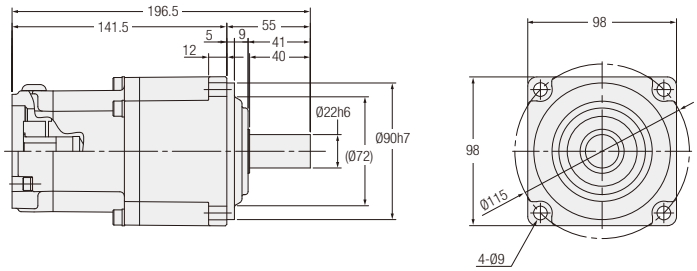

Motor Power Class	Shaft Arrangement	Ingress Protection Rating: IP44 Class	Ingress Protection Rating: IP65 Class	Reduction Ratio	Flange Type	Figure Number	Approx. Weight (kg)	A	B	C
200 W	J: Straight shaft	APGZ22J-∗∗∗□200△N	APGZ22J-∗∗∗□200△W	100	S7	7	3.9	—	—	—
400 W		APGZ22J-∗∗∗□400△N	APGZ22J-∗∗∗□400△W	40, 50, 60	S7	7	3.9	—	—	—
750 W		APGZ22J-∗∗∗□750△N	APGZ22J-∗∗∗□750△W	15, 20, 30	S1/S2/S3/S4	8	4.0	—	—	—
750 W		APGZ22J-∗∗∗□750△N	APGZ22J-∗∗∗□750△W	15, 20, 30	S6	9	4.0	197	142	—
750 W		APGZ22J-∗∗∗□750△N	APGZ22J-∗∗∗□750△W	15, 20, 30	S8	10	4.0	—	—	—
750 W		APGZ22J-∗∗∗□750△N	APGZ22J-∗∗∗□750△W	15, 20, 30	S9	9	4.0	196.5	141.5	—
750 W		APGZ22J-∗∗∗□750△N	APGZ22J-∗∗∗□750△W	15, 20, 30	F6/F7	9	4.0	202	147	—

Note: A reduction ratio will be indicated as ∗∗∗ in the nomenclature. In addition, backlash will be indicated as □, and a flange type will be indicated as △.
Note: Please refer to pages 892 to 900 for the detailed dimensions of the input shaft area.
Note: Please refer to page 760 for the performance table.

<Figure 11>

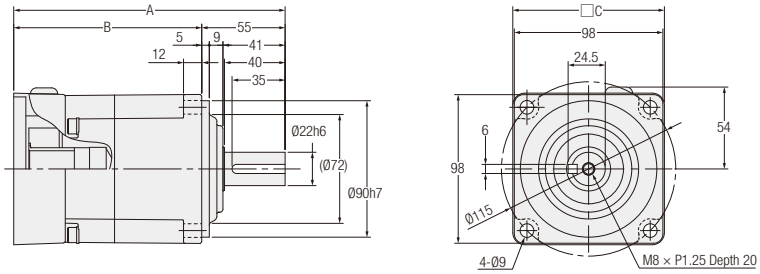

<Figure 12>

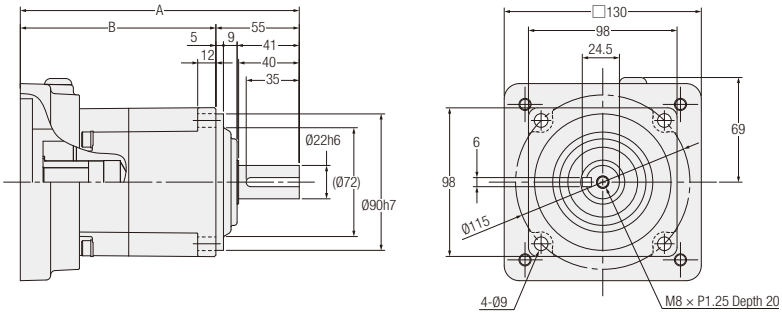

Motor Power Class	Shaft Arrangement	Ingress Protection Rating: IP44 Class	Ingress Protection Rating: IP65 Class	Reduction Ratio	Flange Type	Figure Number	Approx. Weight (kg)	A	B	C
1000 W	K: Output shaft with Shaft end tapped	APGZ22K-✱✱✱□1000△N	APGZ22K-✱✱✱□1000△W	3, 5, 10	K13/K21/K22/ K23	11	4.0	179	124	100
1000 W		APGZ22K-✱✱✱□1000△N	APGZ22K-✱✱✱□1000△W	3, 5, 10	K67/K6E/K61	11	4.0	180	125	95
					K81	11	4.0	180	125	100
1000 W		APGZ22K-✱✱✱□1000△N	APGZ22K-✱✱✱□1000△W	3, 5, 10	K99	11	4.0	179	124	95
1000 W		APGZ22K-✱✱✱□1000△N	APGZ22K-✱✱✱□1000△W	3, 5, 10	K33	12	4.5	184	129	95
1000 W		APGZ22K-✱✱✱□1000△N	APGZ22K-✱✱✱□1000△W	3, 5, 10	F31	12	4.5	188	133	95
1500 W		APGZ22K-✱✱✱□1500△N	APGZ22K-✱✱✱□1500△W	3, 5, 10	K13/K21/K22/ K23/KAA	11	4.0	179	124	100
1500 W		APGZ22K-✱✱✱□1500△N	APGZ22K-✱✱✱□1500△W	3, 5, 10	K61/K67	11	4.0	180	125	95
1500 W		APGZ22K-✱✱✱□1500△N	APGZ22K-✱✱✱□1500△W	3, 5, 10	K99	11	4.0	179	124	95
1500 W		APGZ22K-✱✱✱□1500△N	APGZ22K-✱✱✱□1500△W	3, 5, 10	K31/K32/K33	12	4.5	184	129	—
1500 W		APGZ22K-✱✱✱□1500△N	APGZ22K-✱✱✱□1500△W	3, 5, 10	F31	12	4.5	188	133	—
2000 W		APGZ22K-✱✱✱□2000△N	APGZ22K-✱✱✱□2000△W	3, 5, 10	K13/K21/K22/ K23/KAA	11	4.0	179	124	100
2000 W		APGZ22K-✱✱✱□2000△N	APGZ22K-✱✱✱□2000△W	3, 5, 10	K61/K67	11	4.0	180	125	95
2000 W		APGZ22K-✱✱✱□2000△N	APGZ22K-✱✱✱□2000△W	3, 5, 10	K31/K32/K33	12	4.5	184	129	—
2000 W		APGZ22K-✱✱✱□2000△N	APGZ22K-✱✱✱□2000△W	3, 5, 10	F31/F32/F33	12	4.5	188	133	—

Note: A reduction ratio will be indicated as ✱✱✱ in the nomenclature. In addition, backlash will be indicated as □, and a flange type will be indicated as △.
Note: Please refer to pages 892 to 900 for the detailed dimensions of the input shaft area.
Note: Please refer to page 760 for the performance table.

<Figure 13>

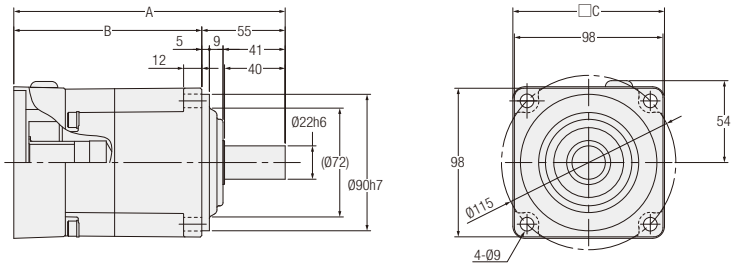

<Figure 14>

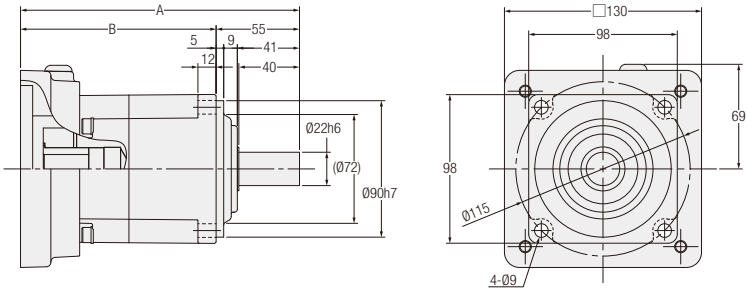

Motor Power Class	Shaft Arrangement	Ingress Protection Rating: IP44 Class	Ingress Protection Rating: IP65 Class	Reduction Ratio	Flange Type	Figure Number	Approx. Weight (kg)	A	B	C
1000 W	J: Straight shaft	APGZ22J-∗∗∗□1000△N	APGZ22J-∗∗∗□1000△W	3, 5, 10	K13/K21/K22/K23	13	4.0	179	124	100
1000 W		APGZ22J-∗∗∗□1000△N	APGZ22J-∗∗∗□1000△W	3, 5, 10	K67/K6E/K61	13	4.0	180	125	95
					K81	13	4.0	180	125	100
1000 W		APGZ22J-∗∗∗□1000△N	APGZ22J-∗∗∗□1000△W	3, 5, 10	K99	13	4.0	179	124	95
1000 W		APGZ22J-∗∗∗□1000△N	APGZ22J-∗∗∗□1000△W	3, 5, 10	K33	14	4.0	184	129	—
1000 W		APGZ22J-∗∗∗□1000△N	APGZ22J-∗∗∗□1000△W	3, 5, 10	F31	14	4.5	188	133	—
1500 W		APGZ22J-∗∗∗□1500△N	APGZ22J-∗∗∗□1500△W	3, 5, 10	K13/K21/K22/K23/KAA	13	4.0	179	124	100
1500 W		APGZ22J-∗∗∗□1500△N	APGZ22J-∗∗∗□1500△W	3, 5, 10	K61/K67	13	4.0	180	125	95
1500 W		APGZ22J-∗∗∗□1500△N	APGZ22J-∗∗∗□1500△W	3, 5, 10	K99	13	4.0	179	124	95
1500 W		APGZ22J-∗∗∗□1500△N	APGZ22J-∗∗∗□1500△W	3, 5, 10	K31/K32/K33	14	4.5	184	129	—
1500 W		APGZ22J-∗∗∗□1500△N	APGZ22J-∗∗∗□1500△W	3, 5, 10	F31	14	4.5	188	133	—
2000 W		APGZ22J-∗∗∗□2000△N	APGZ22J-∗∗∗□2000△W	3, 5, 10	K13/K21/K22/K23/KAA	13	4.0	179	124	100
2000 W		APGZ22J-∗∗∗□2000△N	APGZ22J-∗∗∗□2000△W	3, 5, 10	K61/K67	13	4.0	180	125	95
2000 W		APGZ22J-∗∗∗□2000△N	APGZ22J-∗∗∗□2000△W	3, 5, 10	K31/K32/K33	14	4.5	184	129	—
2000 W		APGZ22J-∗∗∗□2000△N	APGZ22J-∗∗∗□2000△W	3, 5, 10	F31/F32/F33	14	4.5	188	133	—

Note: A reduction ratio will be indicated as ∗∗∗ in the nomenclature. In addition, backlash will be indicated as □, and a flange type will be indicated as △.
Note: Please refer to pages 892 to 900 for the detailed dimensions of the input shaft area.
Note: Please refer to page 760 for the performance table.

APG Type Parallel Shaft Shaft Diameter 28 Backlash 3 arc min/15 arc min Specifications

<Figure 1>

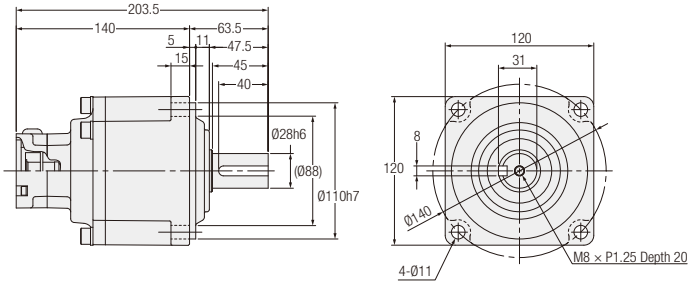

<Figure 2>

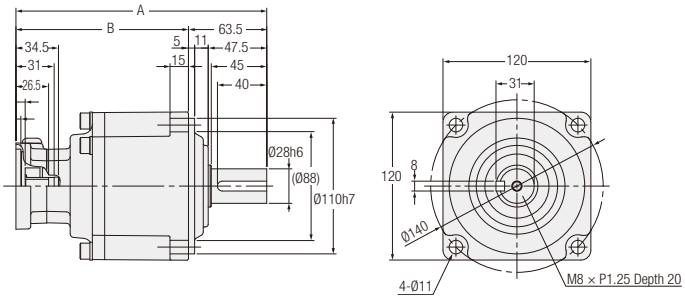

<Figure 3>

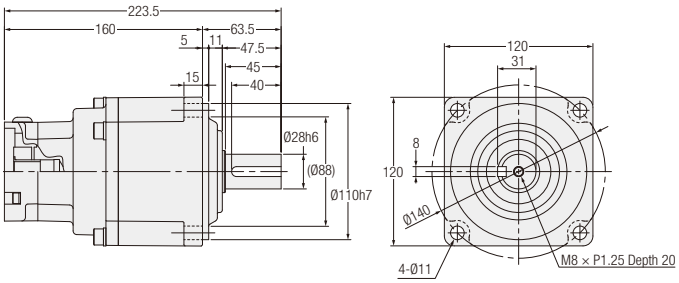

Motor Power Class	Shaft Arrangement	Ingress Protection Rating: IP44 Class	Ingress Protection Rating: IP65 Class	Reduction Ratio	Flange Type	Figure Number	Approx. Weight (kg)	A	B
400 W	K: Output shaft with Shaft end tapped	APGZ28K-∗∗∗□400△N	APGZ28K-∗∗∗□400△W	100	S1/S3/S6	1	8.0	—	—
400 W		APGZ28K-∗∗∗□400△N	APGZ28K-∗∗∗□400△W	100	S7	2	8.0	203.5	140
600 W		APGZ28K-∗∗∗□600△N	APGZ28K-∗∗∗□600△W	40, 50, 60	S1	1	8.0	—	—
750 W		APGZ28K-∗∗∗□750△N	APGZ28K-∗∗∗□750△W	40, 50, 60	S1/S2/S3/S4	3	8.0	—	—
750 W		APGZ28K-∗∗∗□750△N	APGZ28K-∗∗∗□750△W	40, 50, 60	S6	2	8.0	224	160.5
750 W		APGZ28K-∗∗∗□750△N	APGZ28K-∗∗∗□750△W	40, 50, 60	S8	3	8.0	—	—
750 W		APGZ28K-∗∗∗□750△N	APGZ28K-∗∗∗□750△W	40, 50, 60	S9	2	8.0	223.5	160
750 W		APGZ28K-∗∗∗□750△N	APGZ28K-∗∗∗□750△W	40, 50, 60	F6/F7	2	8.0	229	165.5

Note: A reduction ratio will be indicated as ∗∗∗ in the nomenclature. In addition, backlash will be indicated as □, and a flange type will be indicated as △.
Note: Please refer to pages 892 to 900 for the detailed dimensions of the input shaft area.
Note: Please refer to page 760 for the performance table.

<Figure 4>

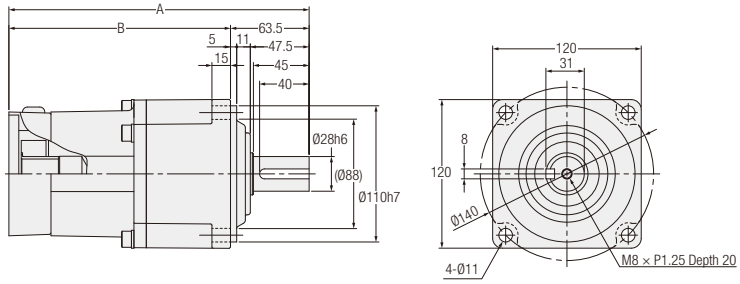

<Figure 5>

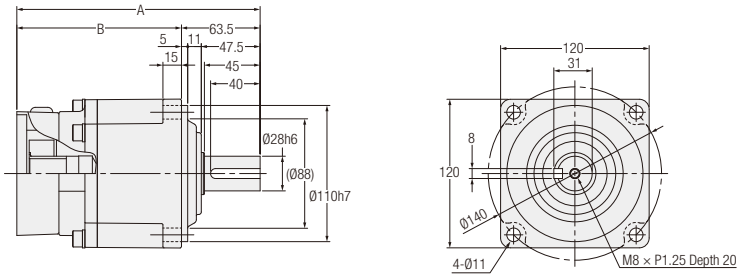

Motor Power Class	Shaft Arrangement	Ingress Protection Rating: IP44 Class	Ingress Protection Rating: IP65 Class	Reduction Ratio	Flange Type	Figure Number	Approx. Weight (kg)	A	B
1000 W	K: Output shaft with Shaft end tapped	APGZ28K-∗∗∗□1000△N	APGZ28K-∗∗∗□1000△W	15, 20, 30, 40, 50	K13/K21/K22/ K23/K99	4	8.5	242.5	179
1000 W		APGZ28K-∗∗∗□1000△N	APGZ28K-∗∗∗□1000△W	15, 20, 30, 40, 50	K61/K67/K6E/ K81	4	8.5	243.5	180
1500 W		APGZ28K-∗∗∗□1500△N	APGZ28K-∗∗∗□1500△W	15, 20, 30	K13/K21/K22/ K23/K99/KAA	4	8.5	242.5	179
1500 W		APGZ28K-∗∗∗□1500△N	APGZ28K-∗∗∗□1500△W	15, 20, 30	K61/K67	4	8.5	243.5	180
2000 W		APGZ28K-∗∗∗□2000△N	APGZ28K-∗∗∗□2000△W	15, 20	K13/K21/K22/ K23/K99/KAA	4	8.5	242.5	179
2000 W		APGZ28K-∗∗∗□2000△N	APGZ28K-∗∗∗□2000△W	15, 20	K61/K67	4	8.5	243.5	180
3000 W		APGZ28K-∗∗∗□3000△N	APGZ28K-∗∗∗□3000△W	3, 5, 10	K13/K21/K22/ K23	5	6.3	196.5	133
3000 W		APGZ28K-∗∗∗□3000△N	APGZ28K-∗∗∗□3000△W	3, 5, 10	K61	5	6.3	197.5	134

Note: A reduction ratio will be indicated as ∗∗∗ in the nomenclature. In addition, backlash will be indicated as □, and a flange type will be indicated as △.
Note: Please refer to pages 892 to 900 for the detailed dimensions of the input shaft area.
Note: Please refer to page 760 for the performance table.

<Figure 6>

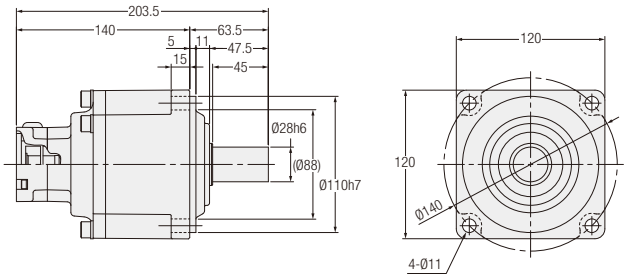

<Figure 7>

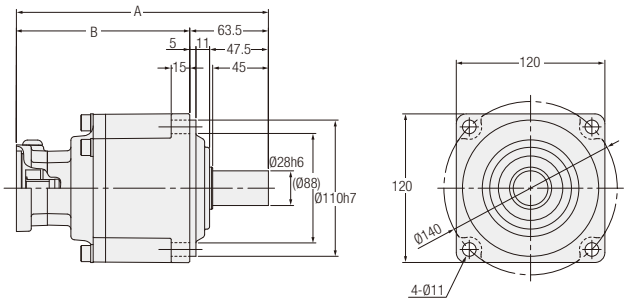

<Figure 8>

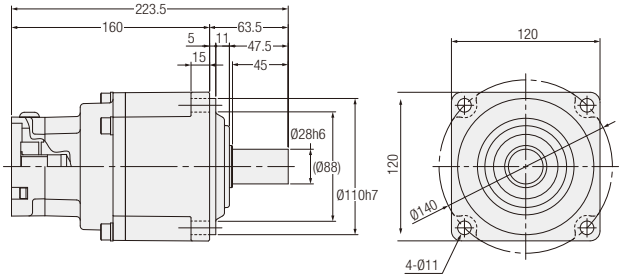

Motor Power Class	Shaft Arrangement	Ingress Protection Rating: IP44 Class	Ingress Protection Rating: IP65 Class	Reduction Ratio	Flange Type	Figure Number	Approx. Weight (kg)	A	B
400 W	J: Straight shaft	APGZ28J-∗∗∗□400△N	APGZ28J-∗∗∗□400△W	100	S1/S3/S6	6	8.0	—	—
400 W		APGZ28J-∗∗∗□400△N	APGZ28J-∗∗∗□400△W	100	S7	7	8.0	203.5	140
600 W		APGZ28J-∗∗∗□600△N	APGZ28J-∗∗∗□600△W	40, 50, 60	S1	6	8.0	—	—
750 W		APGZ28J-∗∗∗□750△N	APGZ28J-∗∗∗□750△W	40, 50, 60	S1/S2/S3/S4	8	8.0	—	—
750 W		APGZ28J-∗∗∗□750△N	APGZ28J-∗∗∗□750△W	40, 50, 60	S6	7	8.0	224	160.5
750 W		APGZ28J-∗∗∗□750△N	APGZ28J-∗∗∗□750△W	40, 50, 60	S8	8	8.0	—	—
750 W		APGZ28J-∗∗∗□750△N	APGZ28J-∗∗∗□750△W	40, 50, 60	S9	7	8.0	223.5	160
750 W		APGZ28J-∗∗∗□750△N	APGZ28J-∗∗∗□750△W	40, 50, 60	F6/F7	7	8.0	229	165.5

Note: A reduction ratio will be indicated as ∗∗∗ in the nomenclature. In addition, backlash will be indicated as □, and a flange type will be indicated as △.
Note: Please refer to pages 892 to 900 for the detailed dimensions of the input shaft area.
Note: Please refer to page 760 for the performance table.

<Figure 9>

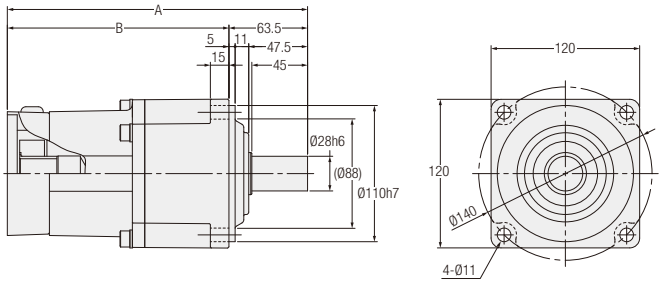

<Figure 10>

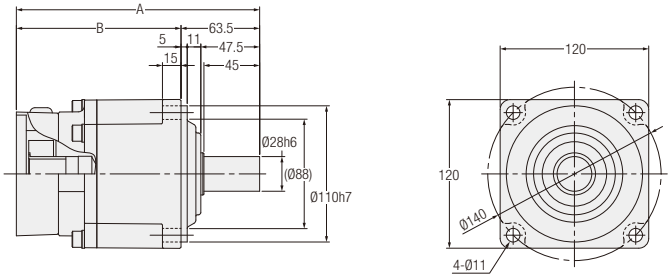

Motor Power Class	Shaft Arrangement	Ingress Protection Rating: IP44 Class	Ingress Protection Rating: IP65 Class	Reduction Ratio	Flange Type	Figure Number	Approx. Weight (kg)	A	B
1000 W	J: Straight shaft	APGZ28J-∗∗∗□1000△N	APGZ28J-∗∗∗□1000△W	15, 20, 30, 40, 50	K13/K21/K22/ K23/K99	9	8.5	242.5	179
1000 W		APGZ28J-∗∗∗□1000△N	APGZ28J-∗∗∗□1000△W	15, 20, 30, 40, 50	K61/K67/K6E/ K81	9	8.5	243.5	180
1500 W		APGZ28J-∗∗∗□1500△N	APGZ28J-∗∗∗□1500△W	15, 20, 30	K13/K21/K22/ K23/K99/KAA	9	8.5	242.5	179
1500 W		APGZ28J-∗∗∗□1500△N	APGZ28J-∗∗∗□1500△W	15, 20, 30	K61/K67	9	8.5	243.5	180
2000 W		APGZ28J-∗∗∗□2000△N	APGZ28J-∗∗∗□2000△W	15, 20	K13/K21/K22/ K23/KAA	9	8.5	242.5	179
2000 W		APGZ28J-∗∗∗□2000△N	APGZ28J-∗∗∗□2000△W	15, 20	K61/K67	9	8.5	243.5	180
3000 W		APGZ28J-∗∗∗□3000△N	APGZ28J-∗∗∗□3000△W	3, 5, 10	K13/K21/K22/ K23	10	6.3	196.5	133
3000 W		APGZ28J-∗∗∗□3000△N	APGZ28J-∗∗∗□3000△W	3, 5, 10	K61	10	6.3	197.5	134

Note: A reduction ratio will be indicated as ∗∗∗ in the nomenclature. In addition, backlash will be indicated as □, and a flange type will be indicated as △.
Note: Please refer to pages 892 to 900 for the detailed dimensions of the input shaft area.
Note: Please refer to page 760 for the performance table.

<Figure 11>

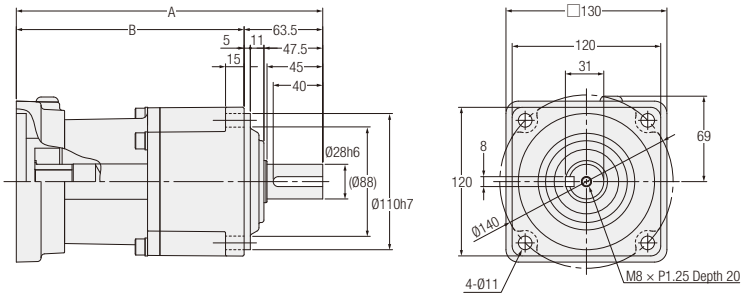

<Figure 12>

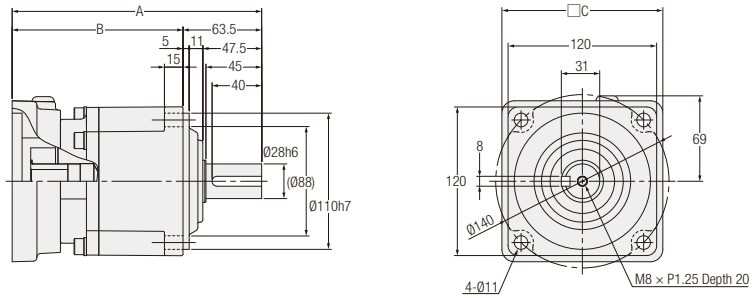

Motor Power Class	Shaft Arrangement	Ingress Protection Rating: IP44 Class	Ingress Protection Rating: IP65 Class	Reduction Ratio	Flange Type	Figure Number	Approx. Weight (kg)	A	B	C
1000 W	K: Output shaft with Shaft end tapped	APGZ28K-∗∗∗□1000△N	APGZ28K-∗∗∗□1000△W	15, 20, 30, 40, 50	K33	11	9.0	247.5	184	—
1000 W		APGZ28K-∗∗∗□1000△N	APGZ28K-∗∗∗□1000△W	15, 20, 30, 40, 50	F31	11	9.0	251.5	188	—
1500 W		APGZ28K-∗∗∗□1500△N	APGZ28K-∗∗∗□1500△W	15, 20, 30	K31/K32/K33	11	9.0	247.5	184	—
1500 W		APGZ28K-∗∗∗□1500△N	APGZ28K-∗∗∗□1500△W	15, 20, 30	F31	11	9.0	251.5	188	—
2000 W		APGZ28K-∗∗∗□2000△N	APGZ28K-∗∗∗□2000△W	15, 20	F31/F32/F33	11	9.0	251.5	188	—
2000 W		APGZ28K-∗∗∗□2000△N	APGZ28K-∗∗∗□2000△W	15, 20	K31/K32/K33	11	9.0	247.5	184	—
3000 W		APGZ28K-∗∗∗□3000△N	APGZ28K-∗∗∗□3000△W	3, 5, 10	K31/K32/K33/K34	12	6.8	201.5	138	130
3000 W		APGZ28K-∗∗∗□3000△N	APGZ28K-∗∗∗□3000△W	3, 5, 10	KBC	12	6.3	201.5	138	120
3000 W		APGZ28K-∗∗∗□3000△N	APGZ28K-∗∗∗□3000△W	3, 5, 10	F31/F32/F33	11	6.8	205.5	142	—

Note: A reduction ratio will be indicated as ∗∗∗ in the nomenclature. In addition, backlash will be indicated as □, and a flange type will be indicated as △.
Note: Please refer to pages 892 to 900 for the detailed dimensions of the input shaft area.
Note: Please refer to page 760 for the performance table.

<Figure 13>

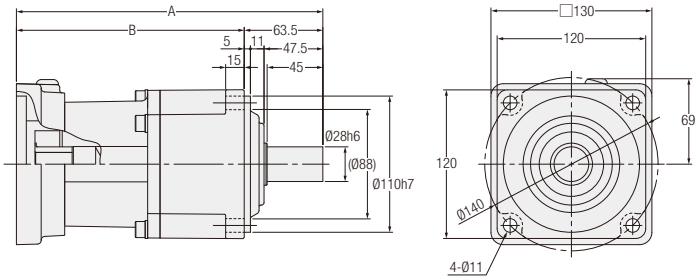

<Figure 14>

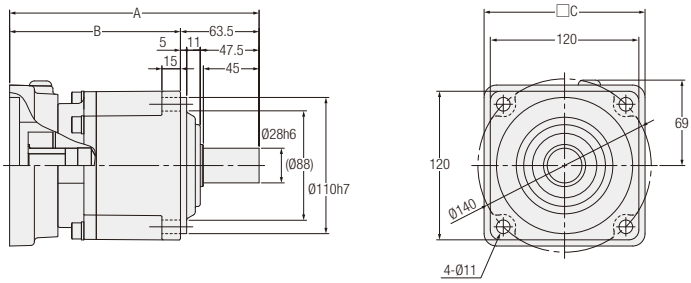

Motor Power Class	Shaft Arrangement	Ingress Protection Rating: IP44 Class	Ingress Protection Rating: IP65 Class	Reduction Ratio	Flange Type	Figure Number	Approx. Weight (kg)	A	B	C
1000 W	J: Straight shaft	APGZ28J-∗∗∗□1000△N	APGZ28J-∗∗∗□1000△W	15, 20, 30, 40, 50	K33	13	9.0	247.5	184	—
1000 W		APGZ28J-∗∗∗□1000△N	APGZ28J-∗∗∗□1000△W	15, 20, 30, 40, 50	F31	13	9.0	251.5	188	—
1500 W		APGZ28J-∗∗∗□1500△N	APGZ28J-∗∗∗□1500△W	15, 20, 30	K31/K32/K33	13	9.0	247.5	184	—
1500 W		APGZ28J-∗∗∗□1500△N	APGZ28J-∗∗∗□1500△W	15, 20, 30	F31	13	9.0	251.5	188	—
2000 W		APGZ28J-∗∗∗□2000△N	APGZ28J-∗∗∗□2000△W	15, 20	K31/K32/K33	13	9.0	247.5	184	—
2000 W		APGZ28J-∗∗∗□2000△N	APGZ28J-∗∗∗□2000△W	15, 20	F31/F32/F33	13	9.0	251.5	188	—
3000 W		APGZ28J-∗∗∗□3000△N	APGZ28J-∗∗∗□3000△W	3, 5, 10	K31/K32/K33/ K34	14	6.8	201.5	138	130
3000 W		APGZ28J-∗∗∗□3000△N	APGZ28J-∗∗∗□3000△W	3, 5, 10	KBC	14	6.3	201.5	138	120
3000 W		APGZ28J-∗∗∗□3000△N	APGZ28J-∗∗∗□3000△W	3, 5, 10	F31/F32/F33	13	6.8	205.5	142	—

Note: A reduction ratio will be indicated as ∗∗∗ in the nomenclature. In addition, backlash will be indicated as □, and a flange type will be indicated as △.
Note: Please refer to pages 892 to 900 for the detailed dimensions of the input shaft area.
Note: Please refer to page 760 for the performance table.

1-3. Low Temperature Startup Characteristics (No Load Running Torque (Input Shaft))

No load running torque means the input shaft torque required to run the gearbox at the rated input speed (3000 r/min) under no load state.
When the gearbox is used at low temperature, the no load running torque at a startup will increase.
When the operation is continued, the no load running torque will decrease with the temperature rise of the gearbox.
The rate of decrease differs depending on the model and the usage environment.
The figure below shows a representative value in a state where a warm-up operation is not performed.

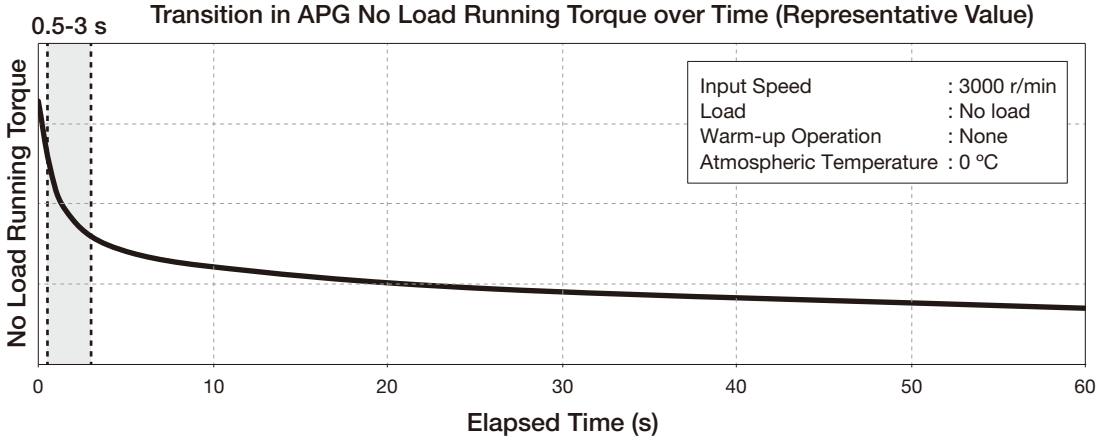

Input Speed: 3000 r/min
No Load Running Torque (Input Shaft): Average value between 0.5 and 3 seconds
The figure below shows a representative value in a state where a warm-up operation is not performed.

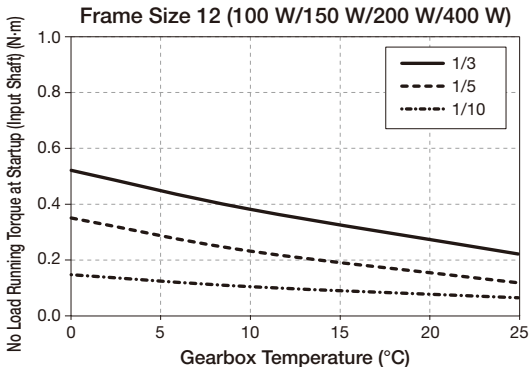

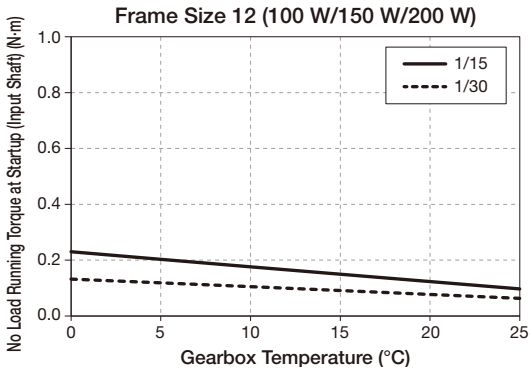

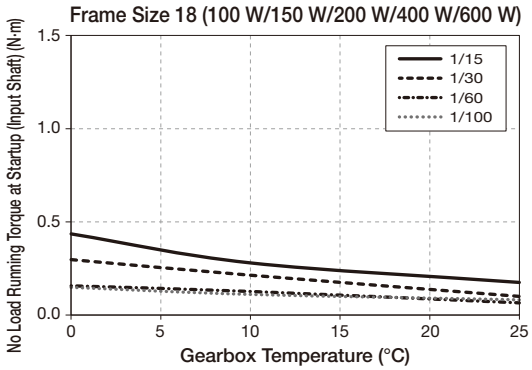

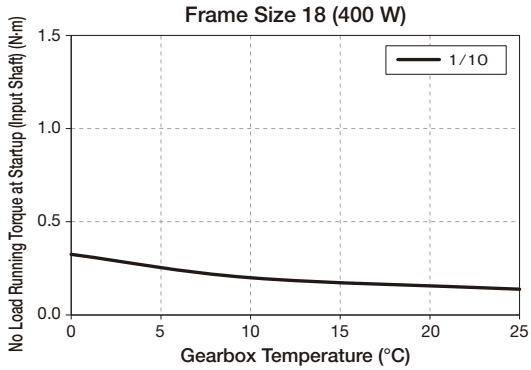

Frame Size 18 (600 W/750 W)

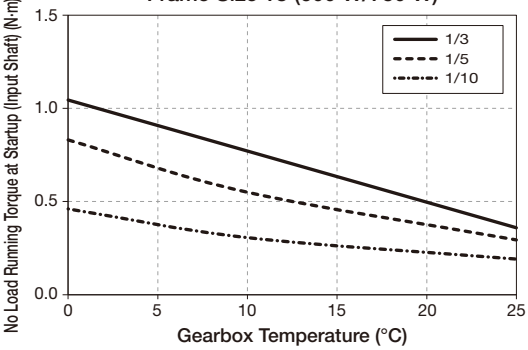

Frame Size 22 (200 W/400 W/600 W/750 W)

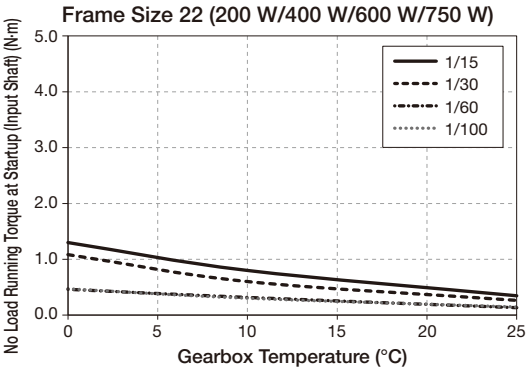

Frame Size 22 (1000 W/1500 W/2000 W)

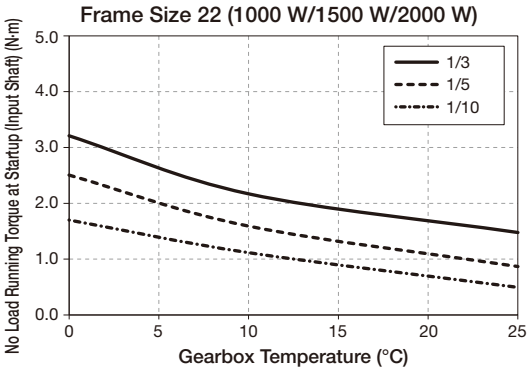

Frame Size 28 (400 W/600 W/750 W/1000 W/1500 W/2000 W)

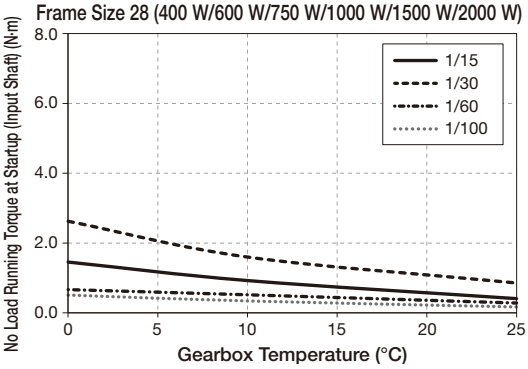

Frame Size 28 (3000 W)

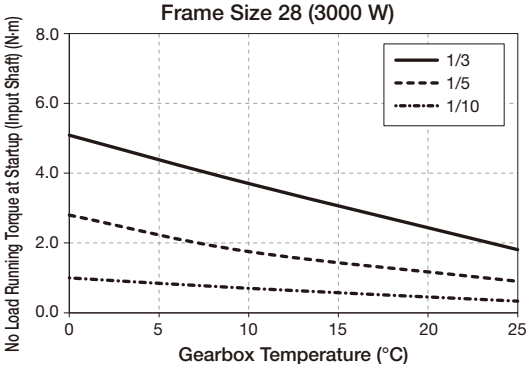

MEMO

2. Low Backlash High Precision Gearboxes for Servo Motors

2-1. Performance Tables

AG3 Type <Low Backlash> Performance Table by Reduction Ratio

[Notes]
- The input speed is 3000 r/min.
- The "*" mark indicates a limited torque type. Please make sure to check the allowable average torque in the performance table.
- Allowable output shaft O.H.L. is the value at the middle of the output shaft.
- For the continuous rated input torque, please refer to page 948. In addition, for the servo motor-based motor rated output torque, please refer to page 922.
- When the output shaft faces upward, the life of backlash may decrease depending on the state of use.
- The key dimensions and tolerances for output shafts conform to JIS B 1301-1996 (plain form).
- The internal moment of inertia (input shaft equivalent) is the value for the gearbox alone, and does not include the motor's moment of inertia.
- The allowable average torque is the continuous allowable torque value.
- Adjust the gain so that the inertial load on the output shaft side does not vibrate during acceleration and deceleration.
- ▭ in the performance table indicates that the input shaft and the output shaft rotate in the opposite directions. (It does not limit the rotational directions of the input shaft and the output shaft.)
- L in the Mounting Type column means foot mount, F means flange mount, and K means small flange mount (up to frame size 32).

■ At an input speed of 3000 r/min

Mounting Type	Output Shaft Diameter	Nominal Reduction Ratio	Actual Reduction Ratio	Precision	Power Class	Allowable Average Torque (3000 r/min)	Allowable Peak Torque of Startup/ Stop	Allowable Output Shaft O.H.L.	Allowable Output Shaft Thrust Load	Internal Moment of Inertia (Input Shaft Equivalent)	Drawings
						N·m	N·m	N	N	$\times10^{-4}$kg·m^2	
AG3LZ/KZ	18	1/5	33/164	L (60 arc min)	100	0.9	1.7	250	29	0.395	P.787/P.794
AG3LZ/KZ	18	1/5	33/164	L (60 arc min)	200	1.9	3.8	250	39	0.697	
AG3LZ/KZ	22	1/5	7/34	L (60 arc min)	400	4.0	8	390	69	0.744	P.788/P.795
AG3LZ/KZ	28	1/5	91/459	L (50 arc min)	750	9.6	19	900	78	1.452	P.789/P.796
AG3LZ/KZ	32	1/5	1/5	L (40 arc min)	2000	25	51	1240	147	4.889	P.790/P.797
AG3LZ/KZ	18	1/10	77/779	L (40 arc min)	100	1.9	3.9	540	78	0.382	P.787/P.794
AG3LZ/KZ	18	1/10	77/779	L (40 arc min)	200	3.9	7.7	540	88	0.683	
AG3LZ/KZ	22	1/10	7/68	L (40 arc min)	400	8.0	16	780	127	0.712	P.788/P.795
AG3LZ/KZ	28	1/10	1/10	L (30 arc min)	750	19	38	1240	167	1.377	P.789/P.796
AG3LZ/KZ	32	1/10	1/10	L (30 arc min)	2000	51	102	1720	294	4.733	P.790/P.797
AG3LZ/KZ	18	1/15	119/1804	L (40 arc min)	100	2.9	5.8	690	118	0.379	P.787/P.794
AG3LZ/KZ	18	1/15	119/1804	L (40 arc min)	200	5.8	12	690	127	0.680	
AG3LZ/KZ	22	1/15	49/748	L (30 arc min)	400	13	25	960	177	0.702	P.788/P.795
AG3LZ/KZ	28	1/15	91/1360	L (30 arc min)	750	29	57	1510	226	1.358	P.789/P.796
AG3LZ/KZ	32	1/15	1/15	L (30 arc min)	2000	76	153	1990	422	4.674	P.790/P.797
AG3LZ/KZ	18	1/20	49/984	L (30 arc min)	100	3.8	7.7	830	167	0.377	P.787/P.794
AG3LZ/KZ	18	1/20	49/984	L (30 arc min)	200	7.7	15	830	177	0.678	
AG3LZ/KZ	22	1/20	7/136	L (30 arc min)	400	16	32	1030	226	0.698	P.788/P.795
AG3LZ/KZ	28	1/20	5/102	L (30 arc min)	750	39	78	1650	294	1.345	P.789/P.796
AG3LZ/KZ	32	1/20	1/20	L (30 arc min)	2000	102	204	2270	461	4.650	P.790/P.797
AG3LZ/KZ	18	1/25	28/697	L (30 arc min)	100	4.8	10	900	196	0.376	P.787/P.794
AG3LZ/KZ	18	1/25	28/697	L (30 arc min)	200	10	19	900	196	0.677	
AG3LZ/KZ	22	1/25	7/170	L (30 arc min)	400	20	40	1170	245	0.695	P.788/P.795
AG3LZ/KZ	28	1/25	7/170	L (30 arc min)	750	46	93	1720	324	1.343	P.789/P.796
AG3LZ/KZ	32	1/25	9/230	L (30 arc min)	2000	130	260	2680	490	4.633	P.790/P.797
AG3LZ/KZ	18	1/30	35/1066	L (30 arc min)	100	5.8	12	960	226	0.375	P.787/P.794
AG3LZ/KZ	22	1/30	7/216	L (30 arc min)	200	12	24	1240	255	0.680	P.788/P.795
AG3LZ/KZ	28	1/30	1/30	L (30 arc min)	400	25	50	1790	363	0.711	P.789/P.796
AG3LZ/KZ	32	1/30	3/92	L (30 arc min)	750	59	117	2820	667	1.378	P.790/P.797
AG3LZ/FZ	40	1/30	1/30	L (30 arc min)	2000	153	305	3570	853	4.718	P.791/P.798
AG3LZ/KZ	18	1/40	35/1404	L (30 arc min)	100	7.7	15	1030	245	0.371	P.787/P.794
AG3LZ/KZ	22	1/40	91/3600	L (30 arc min)	200	16	33	1310	265	0.679	P.788/P.795
AG3LZ/KZ	28	1/40	221/8610	L (30 arc min)	400	35	69	1990	373	0.708	P.789/P.796
AG3LZ/KZ	32	1/40	13/516	L (30 arc min)	750	71	142	2950	696	1.372	P.790/P.797
AG3LZ/FZ	40	1/40	13/540	L (30 arc min)	2000	211	423	4120	883	4.694	P.791/P.798
AG3LZ/KZ	18	1/50	7/351	L (30 arc min)	100	10	19	1100	265	0.370	P.787/P.794
AG3LZ/KZ	22	1/50	11/540	L (30 arc min)	200	20	41	1380	275	0.678	P.788/P.795
AG3LZ/KZ	28	1/50	187/9030	L (30 arc min)	400	43	86	2200	392	0.705	P.789/P.796
AG3LZ/KZ	32	1/50	11/540	L (30 arc min)	750	88	176	3230	716	1.366	P.790/P.797
AG3LZ/FZ	40	1/50	11/564	L (30 arc min)	2000	261	522	4940	912	4.681	P.791/P.798

2-1. Performance Tables

Mounting Type	Output Shaft Diameter	Nominal Reduction Ratio	Actual Reduction Ratio	Precision	Power Class	Allowable Average Torque (3000 r/min)	Allowable Peak Torque of Startup/ Stop	Allowable Output Shaft O.H.L.	Allowable Output Shaft Thrust Load	Internal Moment of Inertia (Input Shaft Equivalent)	Drawings
						N·m	N·m	N	N	$\times 10^{-4}$kg·m^2	
AG3LZ/KZ	22	1/60	11/684	L (30 arc min)	100	13	26	1510	275	0.372	P.788/P.795
AG3LZ/KZ	22	1/60	637/39600	L (30 arc min)	200	26	51	1510	275	0.678	
AG3LZ/KZ	28	1/60	169/9840	L (30 arc min)	400	52	104	2410	412	0.706	P.789/P.796
AG3LZ/KZ	32	1/60	13/774	L (30 arc min)	750	107	213	3850	735	1.368	P.790/P.797
AG3LZ/FZ	40	1/60	91/5400	L (30 arc min)	2000	302	604	4940	980	4.688	P.791/P.798
AG3LZ/KZ	22	1/80	21/1634	L (30 arc min)	100	16	32	1720	275	0.371	P.788/P.795
AG3LZ/KZ	22	1/80	91/7200	L (30 arc min)	200	33	65	1720	284	0.678	
AG3LZ/KZ	28	1/80	65/5166	L (30 arc min)	400	71	142	2410	422	0.705	P.789/P.796
AG3LZ/KZ	32	1/80	13/1032	L (30 arc min)	750	142	284	4120	755	1.367	P.790/P.797
AG3LZ/FZ	40	1/80	13/1080	L (30 arc min)	2000	423	846	4940	1030	4.684	P.791/P.798
AG3LZ/KZ	22	1/100	7/684	L (30 arc min)	100	20	40	1720	294	0.371	P.788/P.795
AG3LZ/KZ	28	1/100	13/1353	L (30 arc min)	200	43	86	1990	422	0.690	P.789/P.796
AG3LZ/KZ	32	1/100	7/688	L (30 arc min)	400	88	175	3430	765	0.734	P.790/P.797
AG3LZ/FZ	40	1/100	91/9000	L (30 arc min)	750	177	354	4940	1079	1.438	P.791/P.798
AG3LZ/FZ	50	1/100	25/2618	L (30 arc min)	2000	533	1066	6860	1471	4.856	P.792/P.799
AG3LZ/KZ	22	1/120	147/17974	L (30 arc min)	100	25	51	1720	294	0.371	P.788/P.795
AG3LZ/KZ	28	1/120	91/11000	L (30 arc min)	200	50	100	2340	431	0.689	P.789/P.796
AG3LZ/KZ	32	1/120	77/9360	L (30 arc min)	400	108	217	4120	785	0.731	P.790/P.797
AG3LZ/FZ	40	1/120	77/9400	L (30 arc min)	750	218	437	4940	1079	1.431	P.791/P.798
AG3LZ/FZ	50	1/120	77/8993	L (30 arc min)	2000	594	1189	6860	1471	4.896	P.792/P.799
AG3LZ/KZ	22	1/160	21/3268	L (30 arc min)	100	32	64	1720	294	0.371	P.788/P.795
AG3LZ/KZ	28	1/160	1/165	L (30 arc min)	200	68	136	2410	451	0.688	P.789/P.796
AG3LZ/KZ	32	1/160	21/3328	L (30 arc min)	400	141	282	4120	834	0.728	P.790/P.797
AG3LZ/FZ	40	1/160	9/1400	L (30 arc min)	750	278	557	4940	1128	1.425	P.791/P.798
AG3LZ/FZ	50	1/160	33/5474	L (30 arc min)	2000	844	1688	6860	1520	4.821	P.792/P.799
AG3LZ/KZ	22	1/200	21/4085	L (30 arc min)	100	40	80	1720	294	0.371	P.788/P.795
AG3LZ/KZ	28	1/200	7/1375	L (30 arc min)	200	81	162	2410	461	0.688	P.789/P.796
AG3LZ/KZ	32	1/200	189/38272	L (30 arc min)	400	180	361	4120	853	0.728	P.790/P.797
AG3LZ/FZ	40	1/200	9/1750	L (30 arc min)	750	348	696	4940	1177	1.425	P.791/P.798
AG3LZ/FZ	50	1/200	30/5831	L (30 arc min)	2000	* 862	1725	6860	1569	4.820	P.792/P.799

AGA Type <Low Backlash> Performance Table by Reduction Ratio

[Notes]
- The input speed is 3000 r/min.
- The "*" mark indicates a limited torque type. Please make sure to check the allowable average torque in the performance table.
- Allowable output shaft O.H.L. is the value at the middle of the output shaft.
- For the continuous rated input torque, please refer to page 948. In addition, for the servo motor-based motor rated output torque, please refer to page 922.
- When the output shaft faces upward, the life of backlash may decrease depending on the state of use.
- The key dimensions and tolerances for output shafts conform to JIS B 1301-1996 (plain form).
- The internal moment of inertia (input shaft equivalent) is the value for the gearbox alone, and does not include the motor's moment of inertia.
- The allowable average torque is the continuous allowable torque value.
- Adjust the gain so that the inertial load on the output shaft side does not vibrate during acceleration and deceleration.
- ▭ in the performance table indicates that the input shaft and the output shaft rotate in the opposite directions. (It does not limit the rotational directions of the input shaft and the output shaft.)
- L in the Mounting Tyoe column means foot mount.

■ At an input speed of 3000 r/min

Mounting Type	Output Shaft Diameter	Nominal Reduction Ratio	Actual Reduction Ratio	Precision	Power Class	Allowable Average Torque (3000 r/min)	Allowable Peak Torque of Startup/ Stop	Allowable Output Shaft O.H.L.	Allowable Output Shaft Thrust Load	Internal Moment of Inertia (Input Shaft Equivalent)	Drawings
						N·m	N·m	N	N	$\times 10^{-4}$kg·m^2	
AGALZ	50	1/100	25/2618	L (30 arc min)	2000	533	1066	6860	1471	4.856	P.793
AGALZ	50	1/120	77/8993	L (30 arc min)	2000	594	1189	6860	1471	4.896	P.793
AGALZ	50	1/160	33/5474	L (30 arc min)	2000	844	1688	6860	1520	4.821	P.793
AGALZ	50	1/200	30/5831	L (30 arc min)	2000	* 862	1725	6860	1569	4.820	P.793

2-2. Drawings

AG3 Type Parallel Shaft | Shaft Diameter 18 | **Foot** Mounting | Low Backlash

<Figure 1>

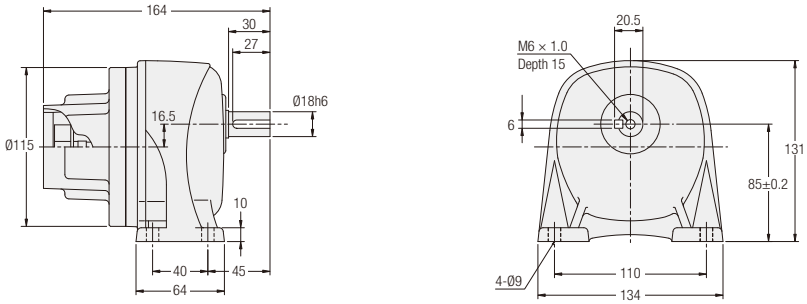

<Figure 2>

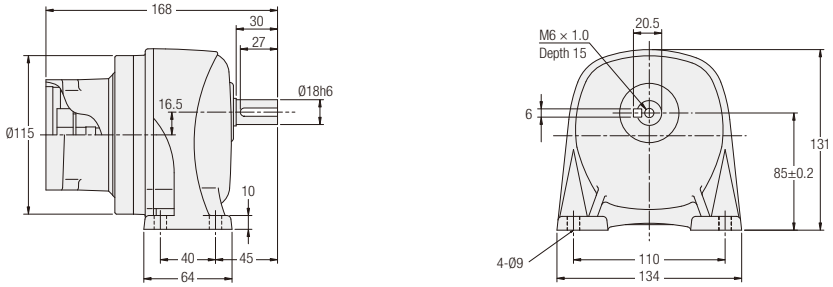

Motor Power Class	Part Number	Reduction Ratio	Figure Number	Flange Type	Approx. Weight (kg)
100 W	AG3LZ18-***□100△	5, 10, 15, 20, 25, 30, 40, 50	1	F1/F3/S1/S3	4
200 W	AG3LZ18-***□200△	5, 10, 15, 20, 25	2	F1/F2/F3/S1/S2/S3	4

Note: A reduction ratio will be indicated as *** in the nomenclature. In addition, backlash will be indicated as □, and a flange type will be indicated as △.
Note: Please refer to pages 901 to 904 for the detailed dimensions of the input shaft area.
Note: Please refer to page 784 for the performance table.

AG3 Type Parallel Shaft | Shaft Diameter 22 | Foot Mounting | Low Backlash

<Figure 1>

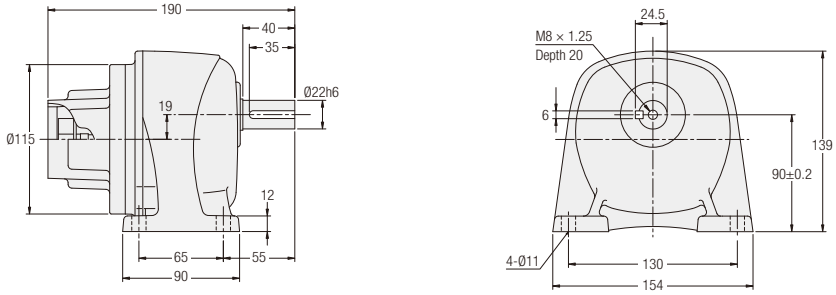

<Figure 2>

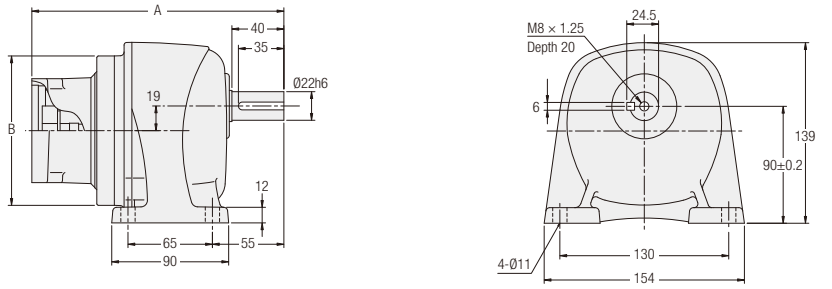

Motor Power Class	Part Number	Reduction Ratio	Figure Number	Flange Type	Approx. Weight (kg)	A	B
100 W	AG3LZ22-✱✱✱□100△	60, 80, 100, 120, 160, 200	1	F1/F3/S1/S3	5	—	—
200 W	AG3LZ22-✱✱✱□200△	30, 40, 50, 60, 80	2	F1/F2/F3/S1/S2/S3	5	194	Ø115
400 W	AG3LZ22-✱✱✱□400△	5, 10, 15, 20, 25	2	F1/F3/S1/S3	5.5	195.5	Ø128

Note: A reduction ratio will be indicated as ✱✱✱ in the nomenclature. In addition, backlash will be indicated as □, and a flange type will be indicated as △.
Note: Please refer to pages 901 to 904 for the detailed dimensions of the input shaft area.
Note: Please refer to page 784 for the performance table.

AG3 Type Parallel Shaft | Shaft Diameter 28 | **Foot** Mounting | Low Backlash

<Figure 1>

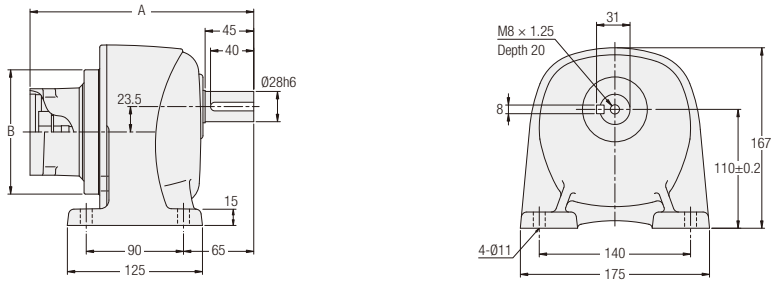

<Figure 2>

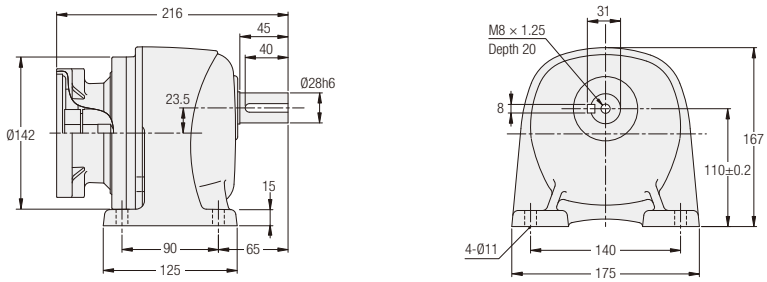

Motor Power Class	Part Number	Reduction Ratio	Figure Number	Flange Type	Approx. Weight (kg)	A	B
200 W	AG3LZ28-∗∗∗□200△	100, 120, 160, 200	1	F1/F2/F3/S1/S2/S3	7	207	Ø115
400 W	AG3LZ28-∗∗∗□400△	30, 40, 50, 60, 80	1	F1/F3/S1/S3	7.5	211.5	Ø128
750 W	AG3LZ28-∗∗∗□750△	5, 10, 15, 20, 25	2	F1/F2/S1/S2/S3/S4	7	—	—

Note: A reduction ratio will be indicated as ∗∗∗ in the nomenclature. In addition, backlash will be indicated as □, and a flange type will be indicated as △.
Note: Please refer to pages 901 to 904 for the detailed dimensions of the input shaft area.
Note: Please refer to page 784 for the performance table.

AG3 Type Parallel Shaft | Shaft Diameter 32 | Foot Mounting | Low Backlash

<Figure 1>

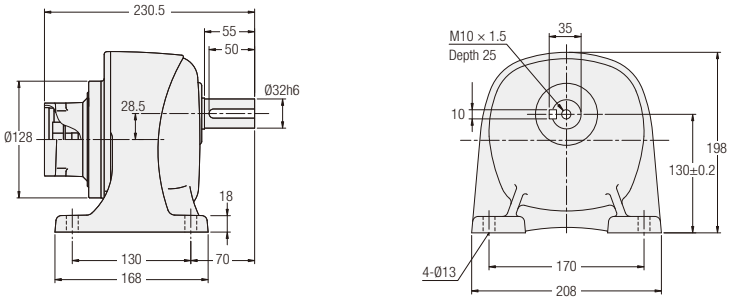

<Figure 2>

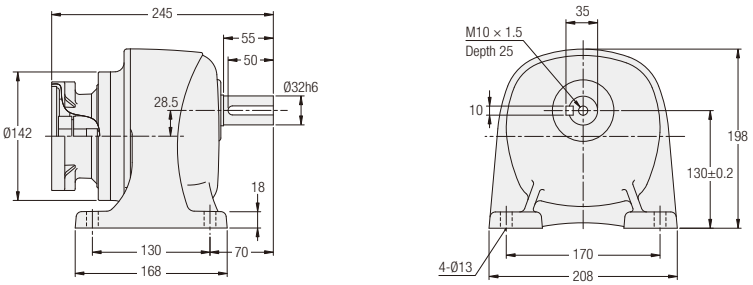

<Figure 3>

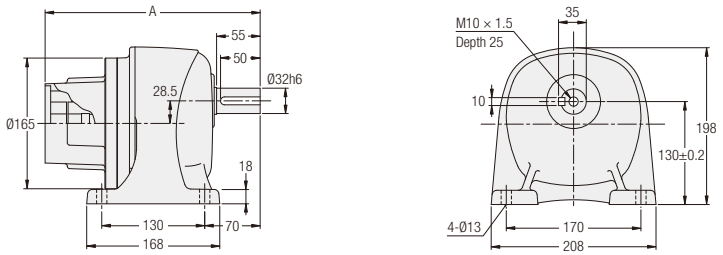

Motor Power Class	Part Number	Reduction Ratio	Figure Number	Flange Type	A	Approx. Weight (kg)
400 W	AG3LZ32-∗∗∗□400△	100, 120, 160, 200	1	F1/F3/S1/S3	—	10.5
750 W	AG3LZ32-∗∗∗□750△	30, 40, 50, 60, 80	2	F1/F2/S1/S2/S3/S4	—	10.5
2000 W	AG3LZ32-∗∗∗□2000△	5, 10, 15, 20, 25	3	K21/K22/K23	271.5	12
				K31/K32/K33	271.5	
				F31/F33	281.5	

Note: A reduction ratio will be indicated as ∗∗∗ in the nomenclature. In addition, backlash will be indicated as □, and a flange type will be indicated as △.
Note: Please refer to pages 901 to 904 for the detailed dimensions of the input shaft area.
Note: Please refer to page 784 for the performance table.

AG3 Type Parallel Shaft | Shaft Diameter **40** | **Foot** Mounting | Low Backlash

<Figure 1>

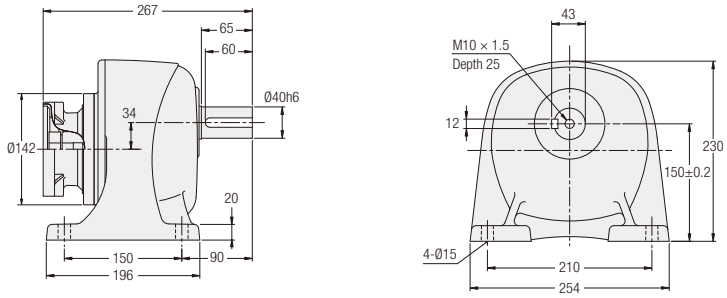

<Figure 2>

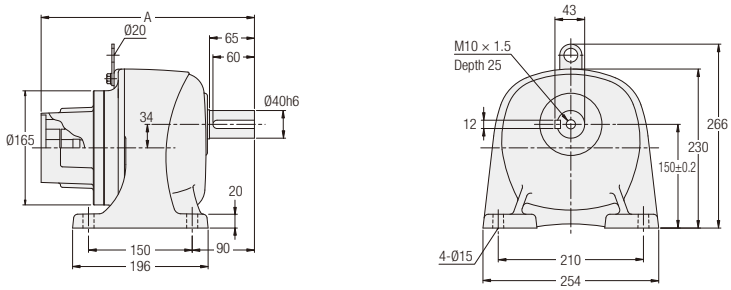

Motor Power Class	Part Number	Reduction Ratio	Figure Number	Flange Type	A	Approx. Weight (kg)
750 W	AG3LZ40-∗∗∗□750△	100, 120, 160, 200	1	F1/F2/S1/S2/S3/S4	—	18
2000 W	AG3LZ40-∗∗∗□2000△	30, 40, 50, 60, 80	2	K21/K22/K23	308.5	20
				K31/K32/K33	308.5	
				F31/F33	318.5	

Note: A reduction ratio will be indicated as ∗∗∗ in the nomenclature. In addition, backlash will be indicated as □, and a flange type will be indicated as △.
Note: Please refer to pages 901 to 904 for the detailed dimensions of the input shaft area.
Note: Please refer to page 784 for the performance table.

AG3 Type Parallel Shaft | Shaft Diameter 50 | Foot Mounting | Low Backlash

<Figure 1>

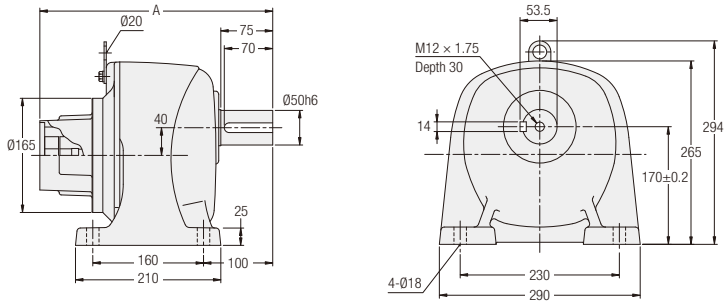

Motor Power Class	Part Number	Reduction Ratio	Figure Number	Flange Type	A	Approx. Weight (kg)
2000 W	AG3LZ50-∗∗∗□2000△	100, 120, 160, 200	1	K21/K22/K23	336.5	53
				K31/K32/K33	336.5	
				F31/F33	346.5	

Note: A reduction ratio will be indicated as ∗∗∗ in the nomenclature. In addition, backlash will be indicated as □, and a flange type will be indicated as △.
Note: Please refer to pages 901 to 904 for the detailed dimensions of the input shaft area.
Note: Please refer to page 785 for the performance table.

AGA Type Parallel Shaft | Shaft Diameter 50 | **Foot** Mounting | Low Backlash

<Figure 1>

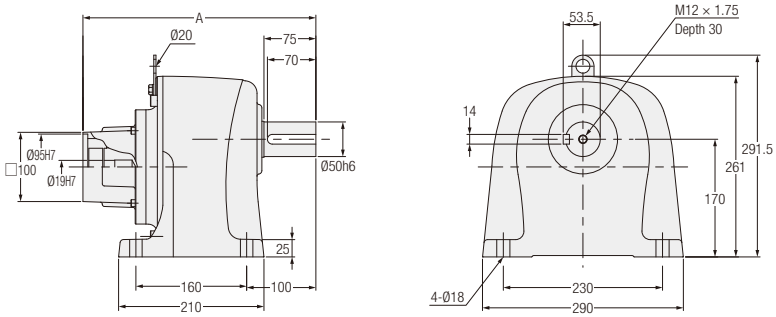

Motor Power Class	Part Number	Reduction Ratio	Figure Number	Flange Type	A	Approx. Weight (kg)
2000 W	AGALZ50-∗∗∗□2000△	100, 120, 160, 200	1	K21/K22/K23	336.5	33.5
				K31/K32/K33	336.5	
				F31/F33	346.5	

Note: A reduction ratio will be indicated as ∗∗∗ in the nomenclature. In addition, backlash will be indicated as □, and a flange type will be indicated as △.
Note: Please refer to pages 901 to 904 for the detailed dimensions of the input shaft area.
Note: Please refer to page 786 for the performance table.

AG3 Type Parallel Shaft | Shaft Diameter 18 | Small Flange Mounting | Low Backlash

<Figure 1>

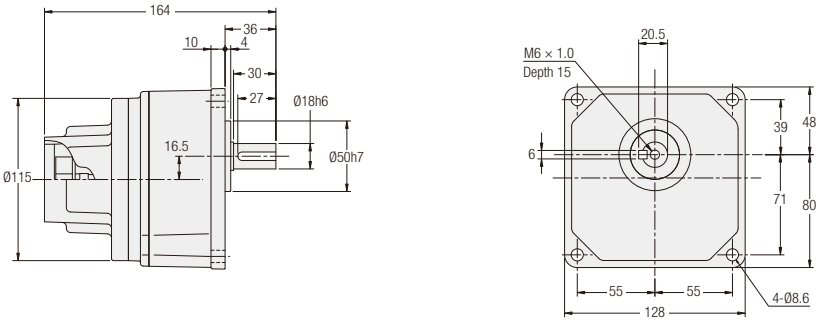

<Figure 2>

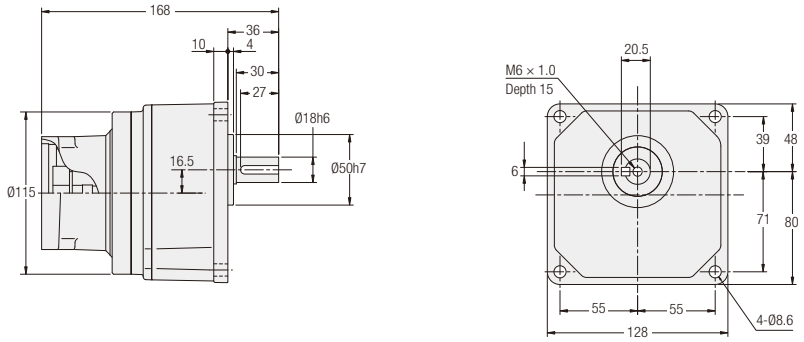

Motor Power Class	Part Number	Reduction Ratio	Figure Number	Flange Type	Approx. Weight (kg)
100 W	AG3KZ18-∗∗∗□100△	5, 10, 15, 20, 25, 30, 40, 50	1	F1/F3/S1/S3	4
200 W	AG3KZ18-∗∗∗□200△	5, 10, 15, 20, 25	2	F1/F2/F3/S1/S2/S3	4

Note: A reduction ratio will be indicated as ∗∗∗ in the nomenclature. In addition, backlash will be indicated as □, and a flange type will be indicated as △.
Note: Please refer to pages 901 to 904 for the detailed dimensions of the input shaft area.
Note: Please refer to page 784 for the performance table.

AG3 Type Parallel Shaft | Shaft Diameter 22 | **Small Flange** Mounting | Low Backlash

<Figure 1>

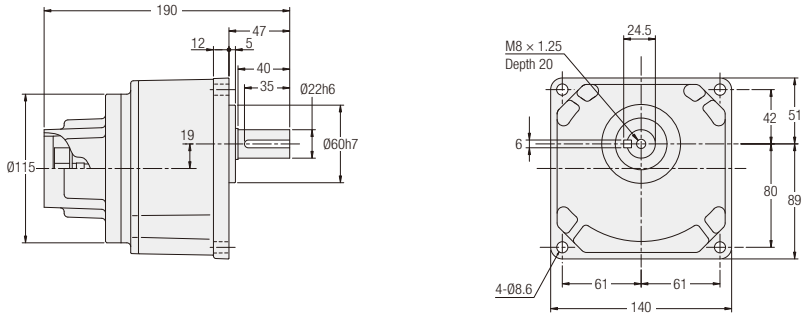

<Figure 2>

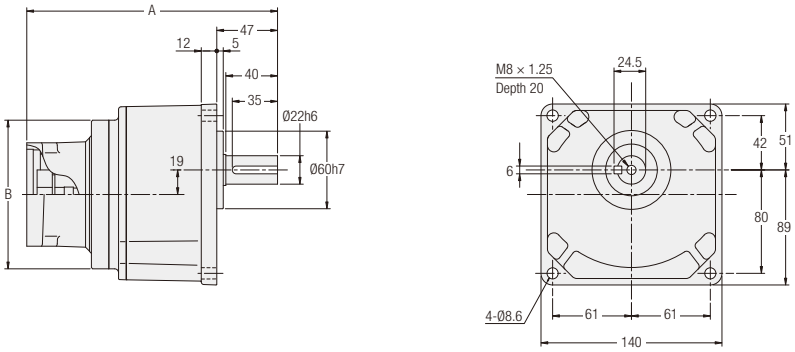

Motor Power Class	Part Number	Reduction Ratio	Figure Number	Flange Type	Approx. Weight (kg)	A	B
100 W	AG3KZ22-∗∗∗□100△	60, 80, 100, 120, 160, 200	1	F1/F3/S1/S3	5	—	—
200 W	AG3KZ22-∗∗∗□200△	30, 40, 50, 60, 80	2	F1/F2/F3/S1/S2/S3	5	194	Ø115
400 W	AG3KZ22-∗∗∗□400△	5, 10, 15, 20, 25	2	F1/F3/S1/S3	5.5	195.5	Ø128

Note: A reduction ratio will be indicated as ∗∗∗ in the nomenclature. In addition, backlash will be indicated as □, and a flange type will be indicated as △.
Note: Please refer to pages 901 to 904 for the detailed dimensions of the input shaft area.
Note: Please refer to page 784 for the performance table.

AG3 Type Parallel Shaft | Shaft Diameter 28 | Small Flange Mounting | Low Backlash

<Figure 1>

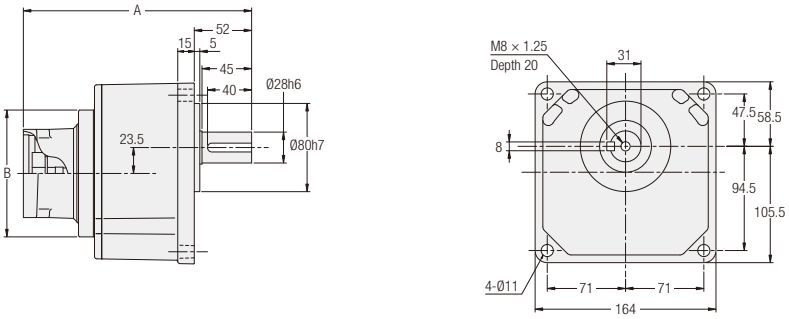

<Figure 2>

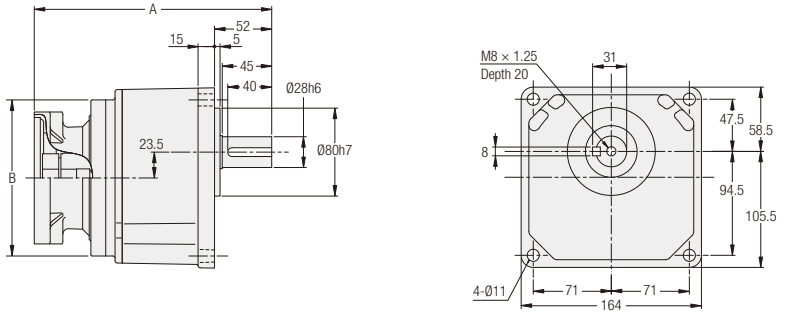

Motor Power Class	Part Number	Reduction Ratio	Figure Number	Flange Type	Approx. Weight (kg)	A	B
200 W	AG3KZ28-∗∗∗□200△	100, 120, 160, 200	1	F1/F2/F3/S1/S2/S3	7	207	Ø115
400 W	AG3KZ28-∗∗∗□400△	30, 40, 50, 60, 80	1	F1/F3/S1/S3	7.5	211.5	Ø128
750 W	AG3KZ28-∗∗∗□750△	5, 10, 15, 20, 25	2	F1/F2/S1/S2/S3/S4	7	216	Ø142

Note: A reduction ratio will be indicated as ∗∗∗ in the nomenclature. In addition, backlash will be indicated as □, and a flange type will be indicated as △.
Note: Please refer to pages 901 to 904 for the detailed dimensions of the input shaft area.
Note: Please refer to page 784 for the performance table.

AG3 Type Parallel Shaft | Shaft Diameter **32** | **Small Flange** Mounting | Low Backlash

<Figure 1>

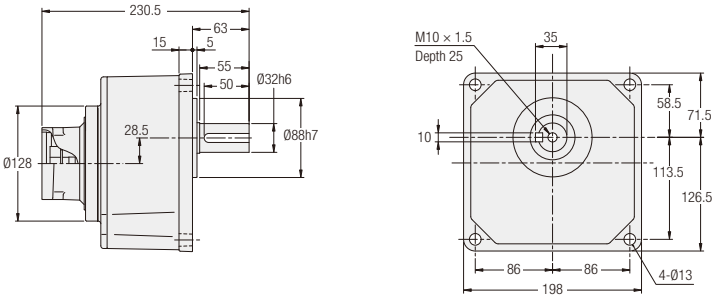

<Figure 2>

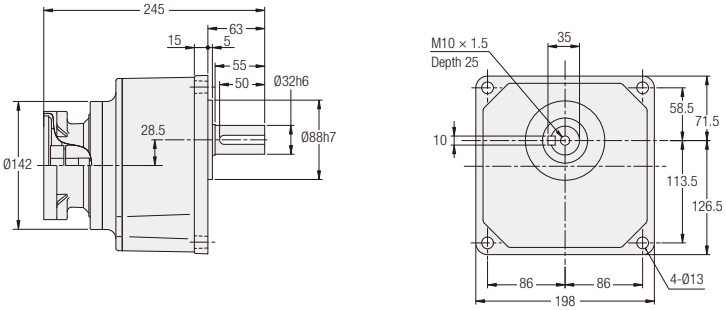

<Figure 3>

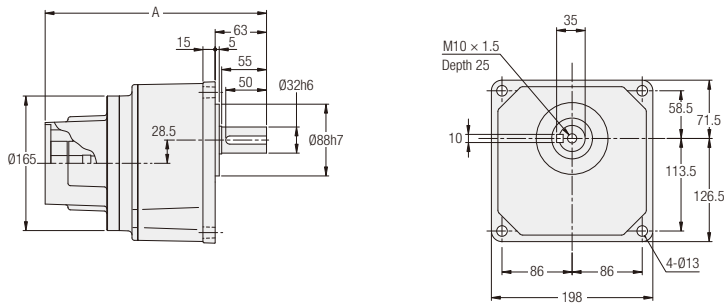

Motor Power Class	Part Number	Reduction Ratio	Figure Number	Flange Type	A	Approx. Weight (kg)
400 W	AG3KZ32-∗∗∗□400△	100, 120, 160, 200	1	F1/F3/S1/S3	—	10.5
750 W	AG3KZ32-∗∗∗□750△	30, 40, 50, 60, 80	2	F1/F2/S1/S2/S3/S4	—	10.5
2000 W	AG3KZ32-∗∗∗□2000△	5, 10, 15, 20, 25	3	K21/K22/K23	271.5	12
				K31/K32/K33	271.5	
				F31/F33	281.5	

Note: A reduction ratio will be indicated as ∗∗∗ in the nomenclature. In addition, backlash will be indicated as □, and a flange type will be indicated as △.
Note: Please refer to pages 901 to 904 for the detailed dimensions of the input shaft area.
Note: Please refer to page 784 for the performance table.

AG3 Type Parallel Shaft | Shaft Diameter 40 | Flange Mounting | Low Backlash

<Figure 1>

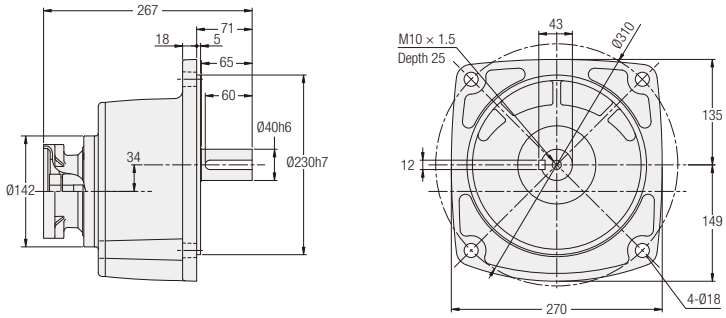

<Figure 2>

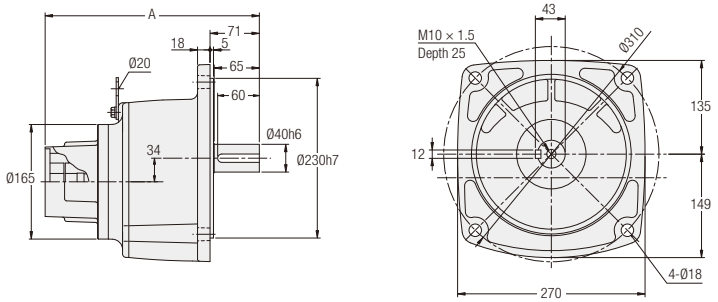

Motor Power Class	Part Number	Reduction Ratio	Figure Number	Flange Type	A	Approx. Weight (kg)
750 W	AG3FZ40-***□750△	100, 120, 160, 200	1	F1/F2/S1/S2/S3/S4	—	19.5
2000 W	AG3FZ40-***□2000△	30, 40, 50, 60, 80	2	K21/K22/K23	308.5	21.5
				K31/K32/K33	308.5	
				F31/F33	318.5	

Note: A reduction ratio will be indicated as *** in the nomenclature. In addition, backlash will be indicated as □, and a flange type will be indicated as △.
Note: Please refer to pages 901 to 904 for the detailed dimensions of the input shaft area.
Note: Please refer to page 784 for the performance table.

AG3 Type Parallel Shaft | Shaft Diameter **50** | **Flange** Mounting | Low Backlash

<Figure 1>

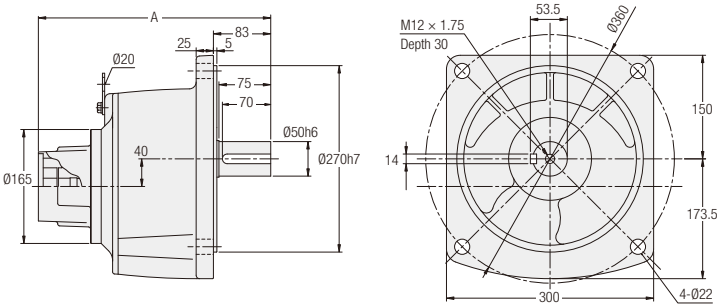

Motor Power Class	Part Number	Reduction Ratio	Figure Number	Flange Type	A	Approx. Weight (kg)
2000 W	AG3FZ50-∗∗∗□2000△	100, 120, 160, 200	1	K21/K22/K23	336.5	58
				K31/K32/K33	336.5	
				F31/F33	346.5	

Note: A reduction ratio will be indicated as ∗∗∗ in the nomenclature. In addition, backlash will be indicated as □, and a flange type will be indicated as △.
Note: Please refer to pages 901 to 904 for the detailed dimensions of the input shaft area.
Note: Please refer to page 785 for the performance table.

MEMO

AH2 Type

Right Angle Shaft

Model and Type Codes
Standard Model Lineup

P.804

HIGH PRECISION GEARBOXES FOR SERVO MOTORS

1. Low Backlash High Precision Gearboxes for Servo Motors

1-1. Performance Tables

1-2. Drawings

Model and Type Codes

AH2 Type

Mounting Type	Motor Type	Frame Size	Shaft Arrangement		Reduction Ratio	Backlash	Motor Power Class	Type	Option	Option Code
AH2L	Z	22	R	–	30	L	200	S1		
AH2L	Z	32	L	–	30	L	750	S4		
AH2L	Z	40	T	–	60	L	2000	K21	X	B3
①	②	③	④		⑤	⑥	⑦	⑧	⑨	⑩

①Mounting Type	AH2L : Right Angle Shaft (Foot Mount)		
②Motor Type	Z : High Precision Gearboxes for Servo Motor (Z Type Gearbox)		
③Frame Size and Output Shaft Diameter	Output Shaft Diameter		
④Shaft Arrangement	Output shaft on the left side when viewed from the input shaft side	Output shaft on the right side when viewed from the input shaft side	Output shaft on both sides when viewed from the input shaft side
	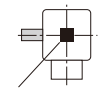 Nameplate	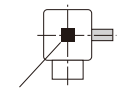 Nameplate	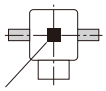 Nameplate
	L	R	T
⑤Reduction Ratio	5:1/5 240 :1/240		
⑥Backlash	L : Low Backlash		
⑦Motor Power Class	100 : 100 W Class		
	200 : 200 W Class		
	400 : 400 W Class		
	750 : 750 W Class		
	2000 : 2000 W Class		
⑧Flange Type for Servo Motor Mounting	F1/S1/K31, etc.		
⑨Option	Blank : Standard Specification		
	X : Special Specification Code		
⑩Option code (Note 1)	Position Code of Wrench Hole for Input Shaft Joint Tightening For details, please refer to the list of option codes on page 949.		

Note 1: The option code will not be shown in the nomenclature on the nameplate. But it will be shown in the Option code row of the nameplate.

Standard Model Lineup

AH2 Type <Low Backlash Specification>

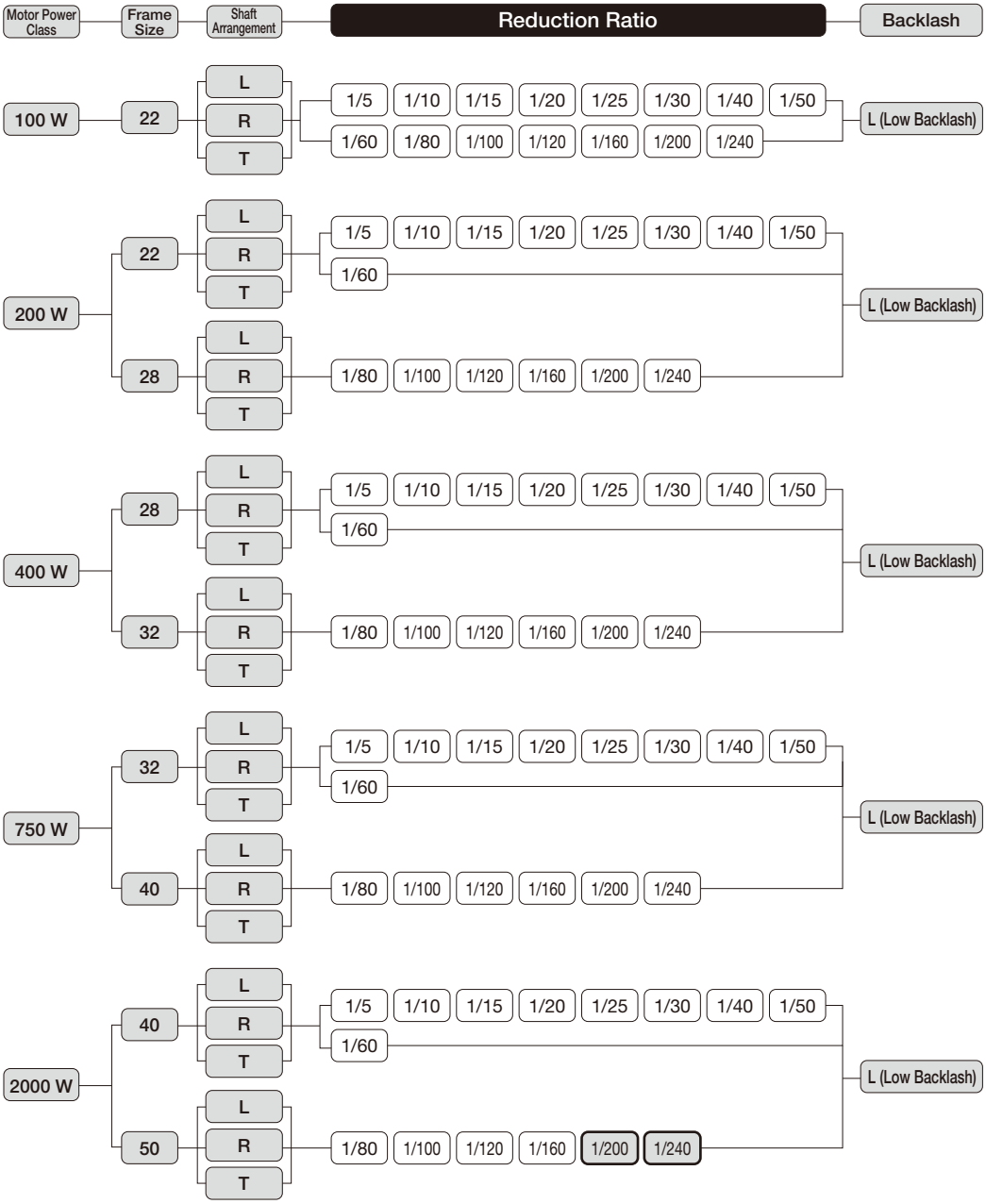

Note 1: ( ) indicates a limited torque type. Please make sure to check the allowable torque in the performance table.
Note 2: For the precision of low backlash types, refer to the performance table.
Note 3: AH2 is not available in 1 arc min and 3 arc min specifications.

1. Low Backlash High Precision Gearboxes for Servo Motors

1-1. Performance Tables

AH2 Type <Low Backlash> Performance Table by Reduction Ratio

[Notes]

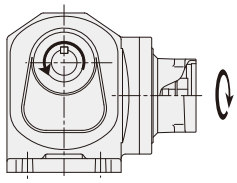

- The input speed is 3000 r/min.
- The "*" mark indicates a limited torque type. Please make sure to check the allowable average torque in the performance table.
- Allowable output shaft O.H.L. is the value at the middle of the output shaft.
- For the continuous rated input torque, please refer to page 948. In addition, for the servo motor-based motor rated output torque, please refer to page 922.
- The key dimensions and tolerances for output shafts conform to JIS B 1301-1996 (plain form).
- The internal moment of inertia (input shaft equivalent) is the value for the gearbox alone, and does not include the motor's moment of inertia.
- The allowable average torque is the continuous allowable torque value.
- Adjust the gain so that the inertial load on the output shaft side does not vibrate during acceleration and deceleration.
- In the performance table, ▭ indicates that for a clockwise (CW) motor input, the output rotates counterclockwise (CCW) as viewed from the output shaft under the conditions shown in the figure on the right. (The arrows indicate the rotational directions of the input and output shafts, and do not limit the actual direction of rotation.)

■ At an input speed of 3000 r/min

Mounting Type	Output Shaft Diameter	Shaft Arrangement	Nominal Reduction Ratio	Actual Reduction Ratio	Precision	Power Class	Allowable Average Torque (3000 r/min)	Allowable Peak Torque of Startup/ Stop	Allowable Output Shaft O.H.L.	Allowable Output Shaft Thrust Load	Internal Moment of Inertia (Input Shaft Equivalent)	Drawings
							N·m	N·m	N	N	$\times 10^{-4}$kg·m^2	
AH2LZ	22	L/R/T	1/5	1/5	L (60 arc min)	100	0.9	1.8	490	147	0.377	P.806
AH2LZ	22	L/R/T	1/5	1/5	L (60 arc min)	200	2.0	3.9	590	147	0.722	
AH2LZ	28	L/R/T	1/5	1/5	L (50 arc min)	400	3.9	7.8	930	235	0.789	P.807
AH2LZ	32	L/R/T	1/5	1/5	L (50 arc min)	750	7.8	16	1520	382	1.643	P.808
AH2LZ	40	L/R/T	1/5	1/5	L (30 arc min)	2000	24	47	2650	667	7.315	P.809
AH2LZ	22	L/R/T	1/10	1/10	L (40 arc min)	100	2.2	4.3	590	235	0.359	P.806
AH2LZ	22	L/R/T	1/10	1/10	L (40 arc min)	200	4.3	8.6	930	235	0.704	
AH2LZ	28	L/R/T	1/10	1/10	L (30 arc min)	400	8.4	17	1470	373	0.769	P.807
AH2LZ	32	L/R/T	1/10	1/10	L (30 arc min)	750	16	31	2010	500	1.513	P.808
AH2LZ	40	L/R/T	1/10	1/10	L (30 arc min)	2000	47	94	3530	883	6.838	P.809
AH2LZ	22	L/R/T	1/15	1/15	L (30 arc min)	100	3.4	6.9	930	235	0.353	P.806
AH2LZ	22	L/R/T	1/15	1/15	L (30 arc min)	200	7.1	14	1030	255	0.698	
AH2LZ	28	L/R/T	1/15	1/15	L (30 arc min)	400	14	27	1670	422	0.756	P.807
AH2LZ	32	L/R/T	1/15	1/15	L (30 arc min)	750	26	53	2210	549	1.481	P.808
AH2LZ	40	L/R/T	1/15	1/15	L (30 arc min)	2000	73	145	4410	1108	6.660	P.809
AH2LZ	22	L/R/T	1/20	1/20	L (30 arc min)	100	4.6	9.1	1030	294	0.359	P.806
AH2LZ	22	L/R/T	1/20	1/20	L (30 arc min)	200	9.4	19	1180	294	0.695	
AH2LZ	28	L/R/T	1/20	1/20	L (30 arc min)	400	19	37	1860	471	0.753	P.807
AH2LZ	32	L/R/T	1/20	1/20	L (30 arc min)	750	35	71	2450	618	1.467	P.808
AH2LZ	40	L/R/T	1/20	1/20	L (30 arc min)	2000	98	196	4710	1177	6.603	P.809
AH2LZ	22	L/R/T	1/25	1/25	L (30 arc min)	100	5.6	11	1180	324	0.349	P.806
AH2LZ	22	L/R/T	1/25	1/25	L (30 arc min)	200	12	24	1270	324	0.694	
AH2LZ	28	L/R/T	1/25	1/25	L (30 arc min)	400	25	49	2010	500	0.750	P.807
AH2LZ	32	L/R/T	1/25	1/25	L (30 arc min)	750	45	90	2740	686	1.462	P.808
AH2LZ	40	L/R/T	1/25	1/25	L (30 arc min)	2000	122	243	5100	1275	6.567	P.809
AH2LZ	22	L/R/T	1/30	1/30	L (30 arc min)	100	6.9	14	1270	343	0.349	P.806
AH2LZ	22	L/R/T	1/30	1/30	L (30 arc min)	200	15	29	1370	343	0.693	
AH2LZ	28	L/R/T	1/30	1/30	L (30 arc min)	400	29	59	2210	549	0.749	P.807
AH2LZ	32	L/R/T	1/30	1/30	L (30 arc min)	750	56	112	2940	735	1.454	P.808
AH2LZ	40	L/R/T	1/30	1/30	L (30 arc min)	2000	145	290	5300	1324	6.531	P.809
AH2LZ	22	L/R/T	1/40	1/40	L (30 arc min)	100	9.2	18	1370	392	0.347	P.806
AH2LZ	22	L/R/T	1/40	1/40	L (30 arc min)	200	20	39	1570	392	0.692	
AH2LZ	28	L/R/T	1/40	1/40	L (30 arc min)	400	39	78	2450	618	0.745	P.807
AH2LZ	32	L/R/T	1/40	1/40	L (30 arc min)	750	74	149	3430	863	1.447	P.808
AH2LZ	40	L/R/T	1/40	1/40	L (30 arc min)	2000	196	392	5590	1402	6.511	P.809
AH2LZ	22	L/R/T	1/50	1/50	L (30 arc min)	100	11	23	1570	431	0.347	P.806
AH2LZ	22	L/R/T	1/50	1/50	L (30 arc min)	200	25	49	1720	431	0.691	
AH2LZ	28	L/R/T	1/50	1/50	L (30 arc min)	400	49	98	2650	667	0.744	P.807
AH2LZ	32	L/R/T	1/50	1/50	L (30 arc min)	750	94	188	3820	961	1.443	P.808
AH2LZ	40	L/R/T	1/50	1/50	L (30 arc min)	2000	243	486	5880	1471	6.504	P.809

1-1. Performance Tables

Mounting Type	Output Shaft Diameter	Shaft Arrangement	Nominal Reduction Ratio	Actual Reduction Ratio	Precision	Power Class	Allowable Average Torque (3000 r/min)	Allowable Peak Torque of Startup/ Stop	Allowable Output Shaft O.H.L.	Allowable Output Shaft Thrust Load	Internal Moment of Inertia (Input Shaft Equivalent)	Drawings
							N·m	N·m	N	N	$\times 10^{-4}$kg·m^2	
AH2LZ	22	L/R/T	1/60	1/59	L (30 arc min)	100	14	27	1570	441	0.346	P.806
AH2LZ	22	L/R/T	1/60	1/59	L (30 arc min)	200	27	55	1810	451	0.691	
AH2LZ	28	L/R/T	1/60	1/59	L (30 arc min)	400	55	110	2740	686	0.744	P.807
AH2LZ	32	L/R/T	1/60	1/59	L (30 arc min)	750	110	220	4120	1030	1.441	P.808
AH2LZ	40	L/R/T	1/60	1/60	L (30 arc min)	2000	292	584	6080	1520	6.500	P.809
AH2LZ	22	L/R/T	1/80	1/80	L (30 arc min)	100	19	37	1570	441	0.343	P.806
AH2LZ	28	L/R/T	1/80	1/80	L (30 arc min)	200	34	69	2450	618	0.691	P.807
AH2LZ	32	L/R/T	1/80	1/80	L (30 arc min)	400	71	141	3430	863	0.746	P.808
AH2LZ	40	L/R/T	1/80	1/80	L (30 arc min)	750	141	282	5780	1422	1.447	P.809
AH2LZ	50	L/R/T	1/80	1/80	L (30 arc min)	2000	380	760	8530	2108	5.839	P.810
AH2LZ	22	L/R/T	1/100	1/100	L (30 arc min)	100	24	47	1570	441	0.343	P.806
AH2LZ	28	L/R/T	1/100	1/100	L (30 arc min)	200	43	86	2650	667	0.691	P.807
AH2LZ	32	L/R/T	1/100	1/100	L (30 arc min)	400	88	176	3820	961	0.746	P.808
AH2LZ	40	L/R/T	1/100	1/100	L (30 arc min)	750	172	345	6080	1520	1.446	P.809
AH2LZ	50	L/R/T	1/100	1/100	L (30 arc min)	2000	476	953	8820	2206	5.835	P.810
AH2LZ	22	L/R/T	1/120	1/120	L (30 arc min)	100	30	61	1570	441	0.343	P.806
AH2LZ	28	L/R/T	1/120	1/120	L (30 arc min)	200	57	114	2740	686	0.691	P.807
AH2LZ	32	L/R/T	1/120	1/120	L (30 arc min)	400	110	220	4120	1030	0.745	P.808
AH2LZ	40	L/R/T	1/120	1/120	L (30 arc min)	750	212	423	6270	1569	1.445	P.809
AH2LZ	50	L/R/T	1/120	1/120	L (30 arc min)	2000	584	1168	9020	2256	5.833	P.810
AH2LZ	22	L/R/T	1/160	1/160	L (30 arc min)	100	40	80	1570	441	0.343	P.806
AH2LZ	28	L/R/T	1/160	1/160	L (30 arc min)	200	75	151	2840	716	0.691	P.807
AH2LZ	32	L/R/T	1/160	1/160	L (30 arc min)	400	149	298	4120	1030	0.745	P.808
AH2LZ	40	L/R/T	1/160	1/160	L (30 arc min)	750	282	564	6470	1618	1.444	P.809
AH2LZ	50	L/R/T	1/160	3/470	L (30 arc min)	2000	775	1550	9310	2305	5.831	P.810
AH2LZ	22	L/R/T	1/200	1/200	L (30 arc min)	100	50	100	1570	441	0.343	P.806
AH2LZ	28	L/R/T	1/200	1/200	L (30 arc min)	200	94	188	2840	716	0.691	P.807
AH2LZ	32	L/R/T	1/200	1/200	L (30 arc min)	400	188	376	4120	1030	0.744	P.808
AH2LZ	40	L/R/T	1/200	1/200	L (30 arc min)	750	353	706	6660	1667	1.443	P.809
AH2LZ	50	L/R/T	1/200	1/196	L (30 arc min)	2000	* 862	1725	9510	2354	5.829	P.810
AH2LZ	22	L/R/T	1/240	1/236	L (30 arc min)	100	60	120	1570	441	0.343	P.806
AH2LZ	28	L/R/T	1/240	1/236	L (30 arc min)	200	110	220	2840	716	0.691	P.807
AH2LZ	32	L/R/T	1/240	1/236	L (30 arc min)	400	221	441	4120	1030	0.744	P.808
AH2LZ	40	L/R/T	1/240	1/240	L (30 arc min)	750	423	847	6660	1667	1.443	P.809
AH2LZ	50	L/R/T	1/240	1/240	L (30 arc min)	2000	* 862	1725	9510	2354	5.828	P.810

1-2. Drawings

AH2 Type Right Angle Shaft | Shaft Diameter 22 | **Foot** Mounting | Low Backlash

<Figure 1>

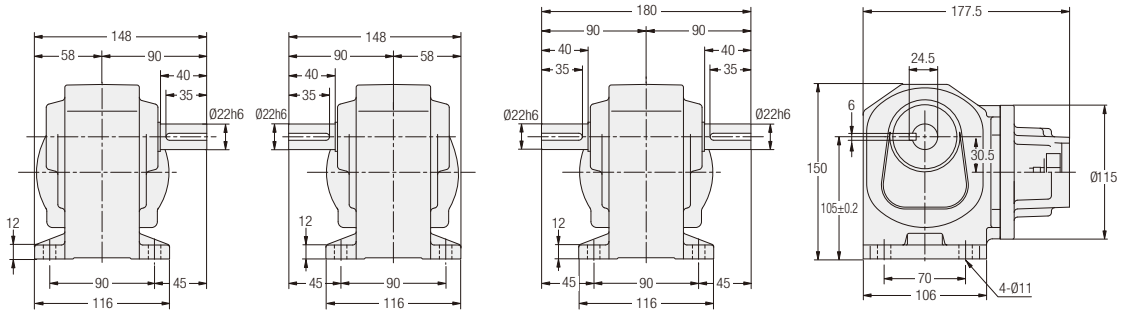

<Figure 2>

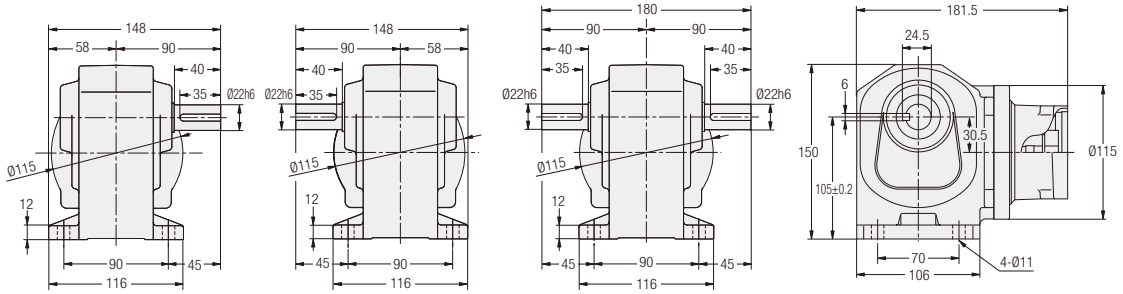

L Shaft R Shaft T Shaft

Motor Power Class	Part Number	Reduction Ratio	Figure Number	Flange Type	Approx. Weight (kg)
100 W	AH2LZ22#-∗∗∗□100△	5, 10, 15, 20, 25, 30, 40, 50, 60, 80, 100, 120, 160, 200, 240	1	F1/F3/S1/S3	4.5
200 W	AH2LZ22#-∗∗∗□200△	5, 10, 15, 20, 25, 30, 40, 50, 60	2	F1/F2/F3/S1/S2/S3	4.5

Note: A shaft arrangement (L, R, T) will be indicated as # in the nomenclature. In addition, a reduction ratio will be indicated as ∗∗∗, backlash will be indicated as □, and a flange type will be indicated as △.
Note: Please refer to pages 901 to 904 for the detailed dimensions of the input shaft area.
Note: Please refer to page 804 for the performance table.

AH2 Type Right Angle Shaft | Shaft Diameter 28 | **Foot** Mounting | Low Backlash

<Figure 1>

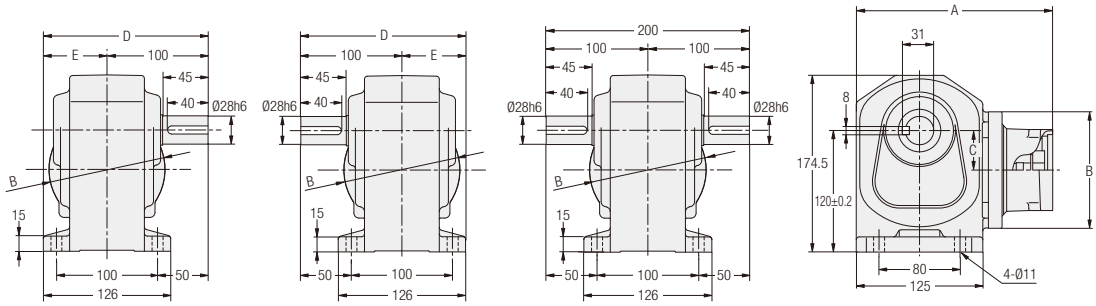

L Shaft R Shaft T Shaft

Motor Power Class	Part Number	Reduction Ratio	Figure Number	Flange Type	Approx. Weight (kg)	A	B	C	D	E
200 W	AH2LZ28#-***□200△	80, 100, 120, 160, 200, 240	1	F1/F2/F3/S1/S2/S3	6.5	194	Ø115	39	163	63
400 W	AH2LZ28#-***□400△	5, 10, 15, 20, 25, 30, 40, 50, 60	1	F1/F3/S1/S3	6.5	207	Ø128	36	164	64

Note: A shaft arrangement (L, R, T) will be indicated as # in the nomenclature. In addition, a reduction ratio will be indicated as ***, backlash will be indicated as □, and a flange type will be indicated as △.
Note: Please refer to pages 901 to 904 for the detailed dimensions of the input shaft area.
Note: Please refer to page 804 for the performance table.

AH2 Type Right Angle Shaft | Shaft Diameter 32 | Foot Mounting | Low Backlash

<Figure 1>

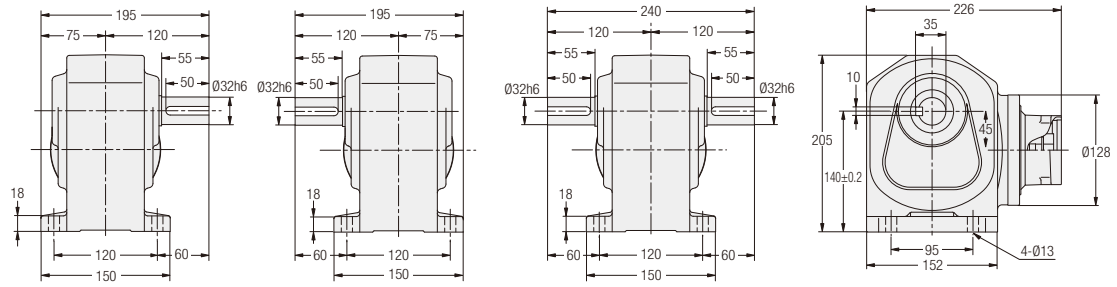

<Figure 2>

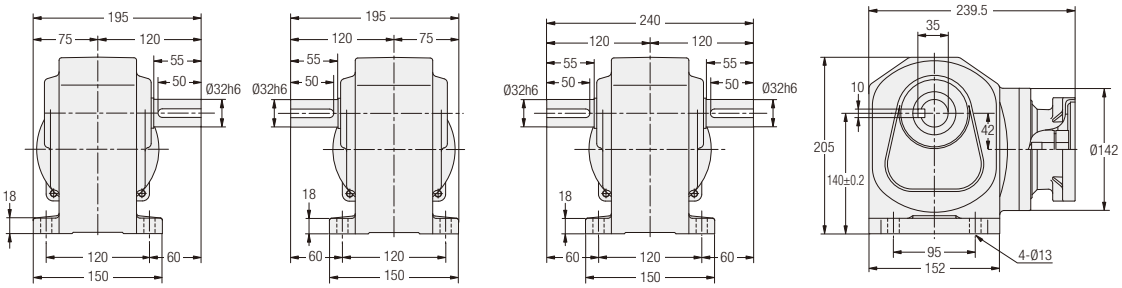

L Shaft R Shaft T Shaft

Motor Power Class	Part Number	Reduction Ratio	Figure Number	Flange Type	Approx. Weight (kg)
400 W	AH2LZ32#-∗∗∗□400△	80, 100, 120, 160, 200, 240	1	F1/F3/S1/S3	9.5
750 W	AH2LZ32#-∗∗∗□750△	5, 10, 15, 20, 25, 30, 40, 50, 60	2	F1/F2/S1/S2/S3/S4	9

Note: A shaft arrangement (L, R, T) will be indicated as # in the nomenclature. In addition, a reduction ratio will be indicated as ∗∗∗, backlash will be indicated as □, and a flange type will be indicated as △.
Note: Please refer to pages 901 to 904 for the detailed dimensions of the input shaft area.
Note: Please refer to page 804 for the performance table.

AH2 Type Right Angle Shaft | Shaft Diameter 40 | **Foot** Mounting | Low Backlash

<Figure 1>

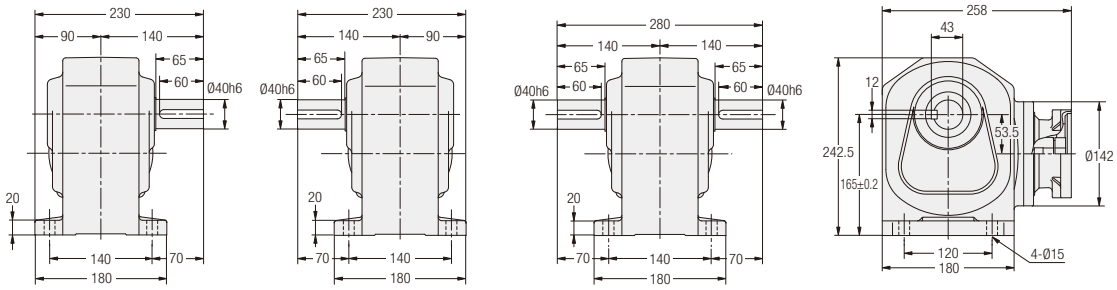

<Figure 2>

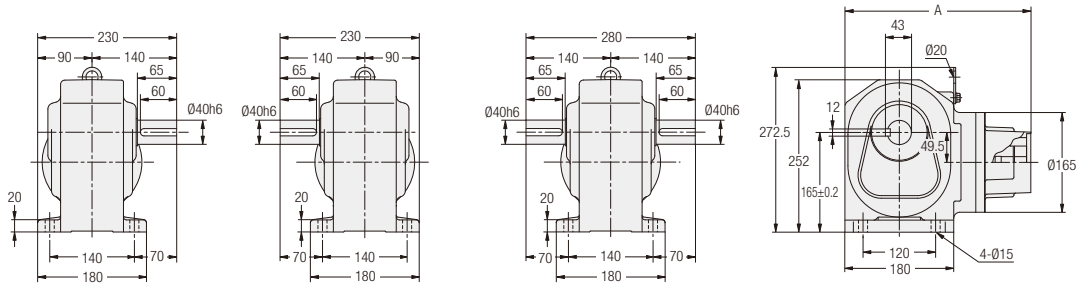

L Shaft R Shaft T Shaft

Motor Power Class	Part Number	Reduction Ratio	Figure Number	Flange Type	A	Approx. Weight (kg)
750 W	AH2LZ40#-∗∗∗□750△	80, 100, 120, 160, 200, 240	1	F1/F2/S1/S2/S3/S4	—	17.5
2000 W	AH2LZ40#-∗∗∗□2000△	5, 10, 15, 20, 25, 30, 40, 50, 60	2	K21/K22/K23	307.5	19.5
				K31/K32/K33	307.5	
				F31/F33	317.5	

Note: A shaft arrangement (L, R, T) will be indicated as # in the nomenclature. In addition, a reduction ratio will be indicated as ∗∗∗, backlash will be indicated as □, and a flange type will be indicated as △.
Note: Please refer to pages 901 to 904 for the detailed dimensions of the input shaft area.
Note: Please refer to page 804 for the performance table.

AH2 Type Right Angle Shaft | Shaft Diameter 50 | Foot Mounting | Low Backlash

<Figure 1>

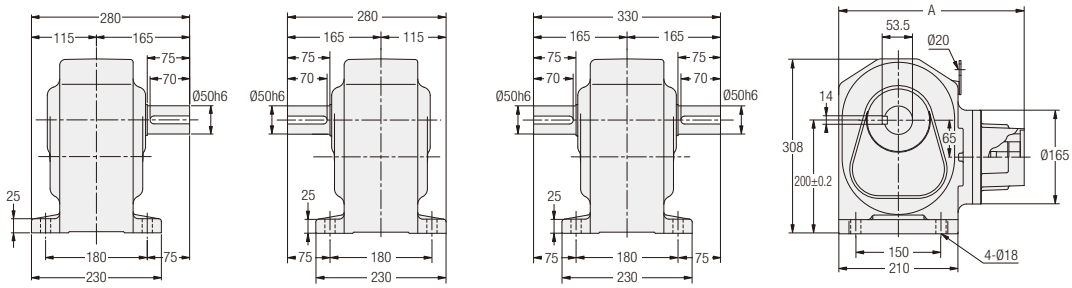

L Shaft R Shaft T Shaft

Motor Power Class	Part Number	Reduction Ratio	Figure Number	Flange Type	A	Approx. Weight (kg)
2000 W	AH2LZ50#-∗∗∗□2000△	80, 100, 120, 160, 200, 240	1	K21/K22/K23	326.5	49.5
				K31/K32/K33	326.5	
				F31/F33	336.5	

Note: A shaft arrangement (L, R, T) will be indicated as # in the nomenclature. In addition, a reduction ratio will be indicated as ∗∗∗, backlash will be indicated as □, and a flange type will be indicated as △.
Note: Please refer to pages 901 to 904 for the detailed dimensions of the input shaft area.
Note: Please refer to page 805 for the performance table.

AFC Type

Right Angle Hollow Bore/ Right Angle Shaft

Model and Type Codes

Standard Model Lineup

P.816

HIGH PRECISION GEARBOXES FOR SERVO MOTORS

1. Compact High Precision Gearboxes for Servo Motors

1-1. Performance Tables

1-2. Drawings

1-3. Low Temperature Startup Characteristics (No Load Running Torque (Input Shaft))

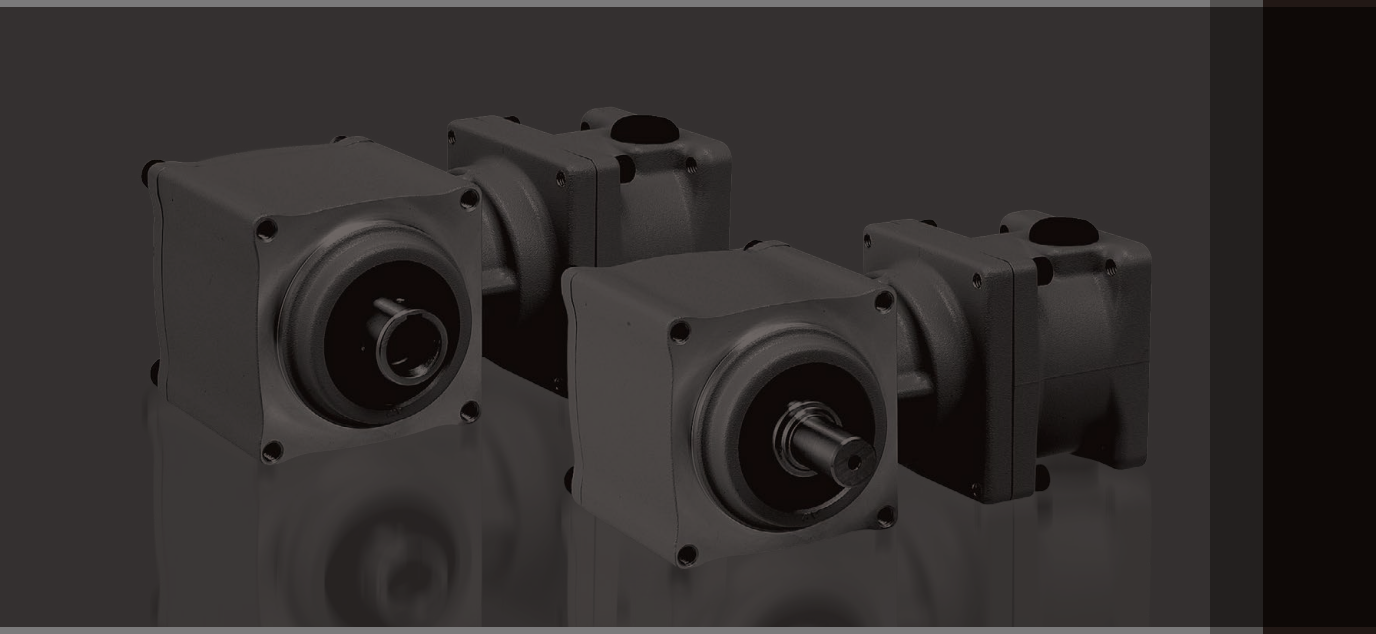

Model and Type Codes

AFC Type

Mounting Type	Motor Type	Frame Size	Shaft Arrangement		Reduction Ratio	Backlash	Motor Power Class	Type	Option	Option Code
AFC	Z	18	S	–	7.5	M	400	S3		
AFC	Z	32	H	–	60	M	750	S4	X	B3
①	②	③	④		⑤	⑥	⑦	⑧	⑨	⑩

①Mounting Type	AFC : Right Angle Shaft (Compact Flange Mount)		
②Motor Type	Z : High Precision Gearboxes for Servo Motor (Z Type Gearbox)		
③Frame Size and Output Shaft Diameter	Output Shaft Diameter (Inner diameter is used for Right Angle Hollow Bore Type and outer diameter for Right Angle Shaft Type)		
④Shaft Arrangement	Right Angle Hollow Bore	Right Angle Shaft	
	S : Right Angle Hollow Bore (with Key Groove)	Output shaft on the left side when viewed from the input shaft side (with a key and shaft end tapped)	Output shaft on the left side when viewed from the input shaft side (without a key)
		L	H
⑤Reduction Ratio	3:1/3 7.5:1/7.5 60:1/60		
⑥Backlash	M : Backlash 3 arc min		
	L : Backlash 30 arc min		
⑦Motor Power Class	100 : 100 W Class		
	200 : 200 W Class		
	400 : 400 W Class		
	750 : 750 W Class		
	1000 : 1000 W Class		
	2000 : 2000 W Class		
	3000 : 3000 W Class		
⑧Flange Type for Servo Motor Mounting	S1/K13/K61, etc.		
⑨Option	Blank : Standard Specification		
	X : Special Specification Code		
⑩Option Code (Note 1)	Position Code of Wrench Hole for Input Shaft Joint Tightening For details, please refer to the list of option codes on page 949.		

Note 1: The option code will not be shown in the nomenclature on the nameplate. But it will be shown in the Option code row of the nameplate.

Standard Model Lineup

AFC Type <Right Angle Hollow Bore>

Motor Power Class	Frame Size	Shaft Arrangement	Reduction Ratio	Backlash
100 W	12, 15, 18	S (Right Angle Hollow Bore/with Key Groove)	1/7.5, 1/10, 1/10, 1/12, 1/15, 1/20, 1/25, 1/30, 1/40, 1/50, 1/60	M (3 arc min), L (30 arc min)
200 W	12, 15, 18, 22	S (Right Angle Hollow Bore/with Key Groove)	1/3, 1/5, 1/7.5, 1/10, 1/10, 1/12, 1/15, 1/20, 1/25, 1/30, 1/40, 1/50, 1/60	M (3 arc min), L (30 arc min)
400 W	15, 18, 22, 28	S (Right Angle Hollow Bore/with Key Groove)	1/3, 1/5, 1/7.5, 1/10, 1/10, 1/12, 1/15, 1/20, 1/25, 1/30, 1/40, 1/50, 1/60	M (3 arc min), L (30 arc min)
750 W	18, 22, 28, 32	S (Right Angle Hollow Bore/with Key Groove)	1/3, 1/5, 1/7.5, 1/10, 1/10, 1/12, 1/15, 1/20, 1/25, 1/30, 1/40, 1/50, 1/60	M (3 arc min), L (30 arc min)
1000 W	22, 28, 32	S (Right Angle Hollow Bore/with Key Groove)	1/3, 1/5, 1/7.5, 1/10, 1/10, 1/12, 1/15, 1/20, 1/25, 1/30	M (3 arc min), L (30 arc min)
2000 W	28, 32	S (Right Angle Hollow Bore/with Key Groove)	1/3, 1/5, 1/7.5, 1/10	M (3 arc min), L (30 arc min)
3000 W	32	S (Right Angle Hollow Bore/with Key Groove)	1/3, 1/5	M (3 arc min), L (30 arc min)

AFC Type <Right Angle Shaft>

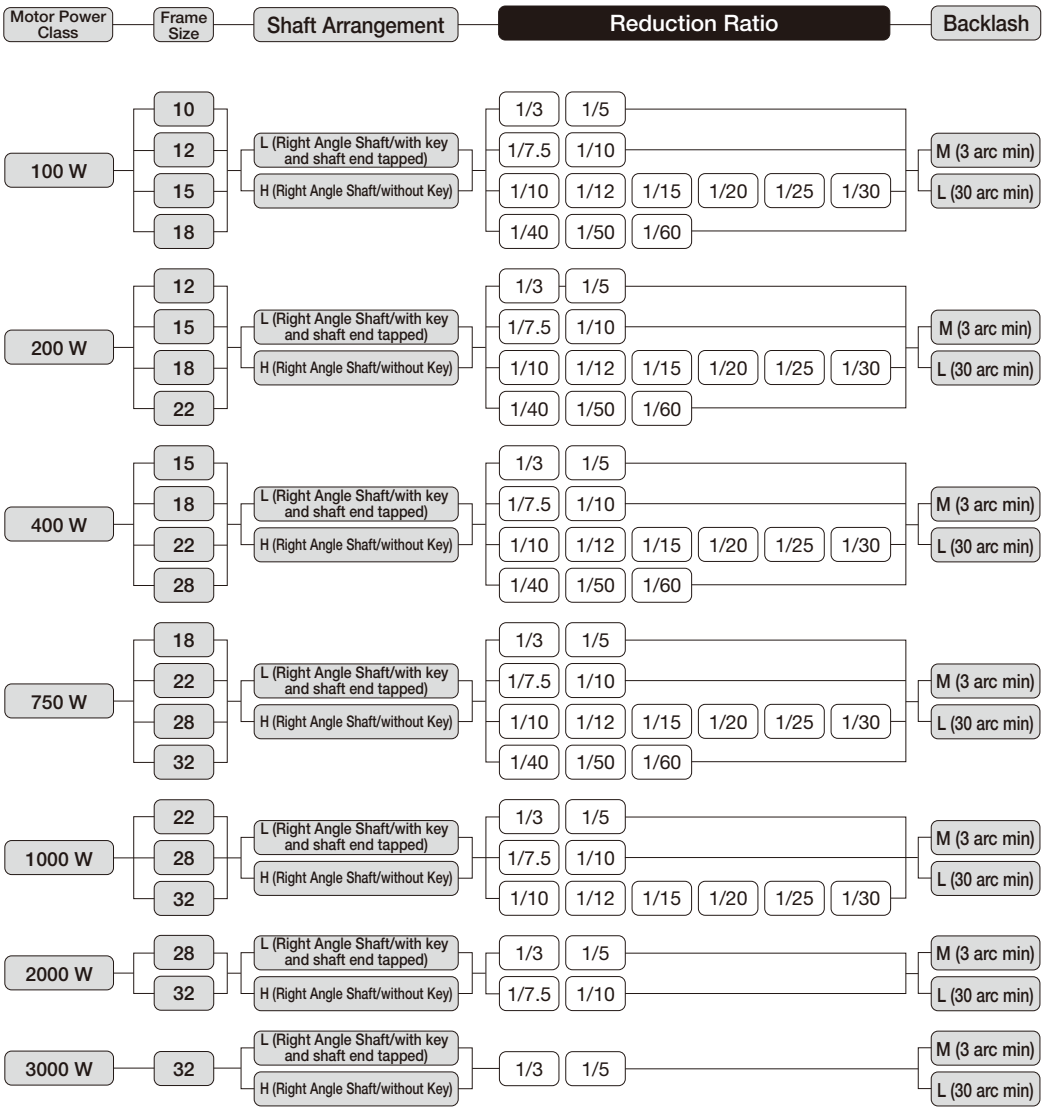

MEMO

1. Compact High Precision Gearboxes for Servo Motors

1-1. Performance Tables

AFC Type <Right Angle Hollow Bore Backlash 3 arc min/30 arc min Specifications> Performance Table by Reduction Ratio

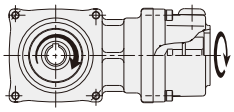

[Notes]
- The instantaneous input speed is 7000 r/min. The rated input speed is 3000 r/min.
- Allowable output shaft O.H.L. is the value at the load point of the O.H.L. shown on page 945.
- For the continuous rated input torque, please refer to page 948. In addition, for the servo motor-based motor rated output torque, please refer to page 927.
- The key dimensions and tolerances for output shafts conform to JIS B 1301-1996 (plain form).
- The key for the output shaft is not supplied with right angle hollow bore types.
- The internal moment of inertia (input shaft equivalent) is the value for the gearbox alone, and does not include the motor's moment of inertia.
- The allowable average torque is the continuous allowable torque value.
- Adjust the gain so that the inertial load on the output shaft side does not vibrate during acceleration and deceleration.
- In the performance table, ▭ indicates that for a clockwise (CW) motor input, the output rotates clockwise (CW) as viewed from the output shaft under the conditions shown in the figure on the right. (The arrows indicate the rotational directions of the input and output shafts, and do not limit the actual direction of rotation.)
- M in the Precision column means backlash 3 arc min, and L means backlash 30 arc min.
- When the gearbox is used at low temperature, the no load running torque at a startup will increase. Please refer to page 842 for cold start characteristics.

■ At an input speed of 3000 r/min

Mounting Type	Output Shaft Diameter	Shaft Arrangement	Nominal Reduction Ratio	Actual Reduction Ratio	Precision	Power Class	Allowable Average Torque (3000 r/min)	Allowable Peak Torque of Startup/ Stop	Allowable Output Shaft O.H.L.	Allowable Output Shaft Thrust Load	Internal Moment of Inertia (Input Shaft Equivalent)		Drawings
											Other than Flange Type K75	Flange Type K75	
							N·m	N·m	N	N	$\times10^{-4}$kg·m^2		
AFCZ	12	S	1/3	1/3	M/L	200	2.37	4.6	500	200	0.288	—	P.820
AFCZ	15	S	1/3	1/3	M/L	400	3.80	10.4	785	314	0.378	—	P.821
AFCZ	18	S	1/3	1/3	M/L	750	7.23	19.4	980	392	1.236	—	P.823
AFCZ	22	S	1/3	1/3	M/L	1000	12.42	25.9	1050	420	5.700	—	P.825
AFCZ	28	S	1/3	1/3	M/L	2000	31.90	54.4	1200	480	7.190	11.11	P.827
AFCZ	32	S	1/3	1/3	M/L	3000	42.41	81.6	1370	548	9.449	12.95	P.829
AFCZ	12	S	1/5	1/5	M/L	200	3.21	7.7	650	250	0.263	—	P.820
AFCZ	15	S	1/5	1/5	M/L	400	6.62	17.3	980	377	0.333	—	P.821
AFCZ	18	S	1/5	1/5	M/L	750	10.43	32.4	1180	454	1.101	—	P.823
AFCZ	22	S	1/5	1/5	M/L	1000	22.99	43.1	1250	481	5.459	—	P.825
AFCZ	28	S	1/5	1/5	M/L	2000	37.93	90.7	1470	565	6.215	10.14	P.827
AFCZ	32	S	1/5	1/5	M/L	3000	53.96	136.0	1670	642	8.770	12.27	P.829
AFCZ	12	S	1/7.5	2/15	M/L	100	2.31	4.6	560	215	0.132	—	P.820
AFCZ	15	S	1/7.5	2/15	M/L	200	5.70	11.1	800	308	0.290	—	P.821
AFCZ	18	S	1/7.5	2/15	M/L	400	8.34	22.2	1120	431	0.391	—	P.822/ P.823
AFCZ	22	S	1/7.5	2/15	M/L	750	19.75	41.6	1370	527	1.311	—	P.824/ P.825
AFCZ	28	S	1/7.5	2/15	M/L	1000	33.07	64.7	1480	569	5.509	—	P.826
AFCZ	32	S	1/7.5	2/15	M/L	2000	51.70	116.6	1670	642	7.229	10.73	P.829
AFCZ	12	S	1/10	1/10	M/L	100	2.90	6.1	650	232	0.130	—	P.820
AFCZ	15	S	1/10	1/10	M/L	200	6.34	14.8	980	350	0.281	—	P.821
AFCZ	18	S	1/10	1/10	M/L	400	10.30	29.6	1250	446	0.379	—	P.822/ P.823
AFCZ	22	S	1/10	1/10	M/L	750	23.83	55.5	1550	554	1.229	—	P.824/ P.825
AFCZ	28	S	1/10	1/10	M/L	1000	33.65	73.9	1750	625	5.291	—	P.826
AFCZ	32	S	1/10	1/10	M/L	2000	62.17	155.5	1960	700	6.849	10.35	P.829

1-1. Performance Tables

Mounting Type	Output Shaft Diameter	Shaft Arrangement	Nominal Reduction Ratio	Actual Reduction Ratio	Precision	Power Class	Allowable Average Torque (3000 r/min)	Allowable Peak Torque of Startup/ Stop	Allowable Output Shaft O.H.L.	Allowable Output Shaft Thrust Load	Internal Moment of Inertia (Input Shaft Equivalent)		Drawings
											Other than Flange Type K75	Flange Type K75	
							N·m	N·m	N	N	$\times 10^{-4}$kg·m^2		
AFCZ	15	S	1/10	1/10	M/L	100	3.76	6.4	980	350	0.136	—	P.821
AFCZ	18	S	1/10	1/10	M/L	200	6.42	16.4	1250	446	0.274	—	P.822
AFCZ	22	S	1/10	1/10	M/L	400	13.24	32.7	1550	554	0.359	—	P.824
AFCZ	28	S	1/10	1/10	M/L	750	20.86	63.0	1960	700	1.091	—	P.826
AFCZ	32	S	1/10	1/10	M/L	1000	45.98	86.3	2350	839	5.656	—	P.829
AFCZ	15	S	1/12	2/25	M/L	100	4.75	8.0	1020	364	0.133	—	P.821
AFCZ	18	S	1/12	2/25	M/L	200	8.03	20.5	1350	482	0.269	—	P.822
AFCZ	22	S	1/12	2/25	M	400	16.55	40.9	1640	586	0.347	—	P.824
AFCZ	22	S	1/12	19/235	L	400	16.55	40.9	1640	586	0.347	—	
AFCZ	28	S	1/12	2/25	M	750	26.08	78.8	2110	754	1.062	—	P.826
AFCZ	28	S	1/12	19/235	L	750	26.08	78.8	2110	754	1.062	—	
AFCZ	32	S	1/12	2/25	M	1000	57.48	107.8	2530	904	5.592	—	P.829
AFCZ	32	S	1/12	19/235	L	1000	57.48	107.8	2530	904	5.592	—	P.829
AFCZ	15	S	1/15	1/15	M/L	100	5.68	9.6	1060	379	0.132	—	P.821
AFCZ	18	S	1/15	1/15	M/L	200	9.63	24.6	1470	525	0.266	—	P.822
AFCZ	22	S	1/15	1/15	M/L	400	19.86	49.1	1720	614	0.339	—	P.824
AFCZ	28	S	1/15	1/15	M/L	750	31.29	94.6	2250	804	1.042	—	P.826
AFCZ	32	S	1/15	1/15	M/L	1000	68.97	129.4	2700	964	5.558	—	P.829
AFCZ	15	S	1/20	1/20	M/L	100	7.59	12.8	1180	421	0.130	—	P.821
AFCZ	18	S	1/20	1/20	M/L	200	12.84	32.7	1570	561	0.263	—	P.822
AFCZ	22	S	1/20	1/20	M/L	400	26.48	65.5	2010	718	0.330	—	P.824
AFCZ	28	S	1/20	1/20	M/L	750	41.72	126.1	2500	893	1.021	—	P.826
AFCZ	32	S	1/20	1/20	M/L	1000	91.96	172.5	3000	1071	5.514	—	P.829
AFCZ	15	S	1/25	1/25	M/L	100	9.44	16.0	1250	446	0.129	—	P.821
AFCZ	18	S	1/25	1/25	M/L	200	16.05	40.9	1670	596	0.260	—	P.822
AFCZ	22	S	1/25	1/25	M/L	400	33.10	81.8	2160	771	0.323	—	P.824
AFCZ	28	S	1/25	1/25	M/L	750	52.15	135.1	2740	979	1.008	—	P.826
AFCZ	32	S	1/25	1/25	M/L	1000	101.08	215.7	3280	1171	5.487	—	P.829
AFCZ	15	S	1/30	1/30	M/L	100	10.23	19.2	1330	475	0.128	—	P.821
AFCZ	18	S	1/30	1/30	M/L	200	17.74	49.1	1810	646	0.259	—	P.822
AFCZ	22	S	1/30	1/30	M/L	400	33.27	98.2	2300	821	0.319	—	P.824
AFCZ	28	S	1/30	1/30	M/L	750	60.37	162.1	2940	1050	0.999	—	P.826
AFCZ	32	S	1/30	1/30	M/L	1000	91.32	258.8	3520	1257	5.468	—	P.829
AFCZ	18	S	1/40	1/40	M/L	100	11.75	26.5	1650	550	0.128	—	P.822
AFCZ	22	S	1/40	1/40	M/L	200	25.21	56.1	2250	750	0.277	—	P.824
AFCZ	28	S	1/40	1/40	M/L	400	41.20	115.3	2900	967	0.369	—	P.826
AFCZ	32	S	1/40	1/40	M/L	750	95.32	227.5	3480	1160	1.220	—	P.828
AFCZ	18	S	1/50	1/50	M/L	100	14.72	33.2	1750	583	0.128	—	P.822
AFCZ	22	S	1/50	1/50	M/L	200	31.55	70.2	2480	827	0.275	—	P.824
AFCZ	28	S	1/50	1/50	M/L	400	63.89	144.1	3150	1050	0.366	—	P.826
AFCZ	32	S	1/50	1/50	M/L	750	101.08	237	3630	1210	1.209	—	P.828
AFCZ	18	S	1/60	1/60	M/L	100	17.62	39.8	1850	617	0.127	—	P.822
AFCZ	22	S	1/60	1/60	M/L	200	33.27	84.2	2700	900	0.274	—	P.824
AFCZ	28	S	1/60	1/60	M/L	400	61.10	144.1	3380	1127	0.364	—	P.826
AFCZ	32	S	1/60	1/60	M/L	750	118.90	284.4	3780	1260	1.204	—	P.828

AFC Type <Right Angle Shaft Backlash 3 arc min/30 arc min Specifications> Performance Table by Reduction Ratio

[Notes]

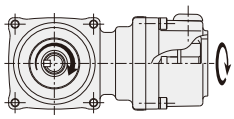

- The instantaneous input speed is 7000 r/min. The rated input speed is 3000 r/min.
- Allowable output shaft O.H.L. is the value at the load point of the O.H.L. shown on page 945.
- For the continuous rated input torque, please refer to page 948. In addition, for the servo motor-based motor rated output torque, please refer to page 929.
- The key dimensions and tolerances for output shafts conform to JIS B 1301-1996 (plain form).
- The key for the output shaft is not supplied with the H shaft (without a key) of right angle shaft types.
- The internal moment of inertia (input shaft equivalent) is the value for the gearbox alone, and does not include the motor's moment of inertia.
- The allowable average torque is the continuous allowable torque value.
- Adjust the gain so that the inertial load on the output shaft side does not vibrate during acceleration and deceleration.
- In the performance table, ▭ indicates that for a clockwise (CW) motor input, the output rotates clockwise (CW) as viewed from the output shaft under the conditions shown in the figure on the right. (The arrows indicate the rotational directions of the input and output shafts, and do not limit the actual direction of rotation.)
- M in the Precision column means backlash 3 arc min, and L means backlash 30 arc min.
- When the gearbox is used at low temperature, the no load running torque at a startup will increase. Please refer to page 842 for cold start characteristics.

■ At an input speed of 3000 r/min

Mounting Type	Output Shaft Diameter	Shaft Arrangement	Nominal Reduction Ratio	Actual Reduction Ratio	Precision	Power Class	Allowable Average Torque (3000 r/min)	Allowable Peak Torque of Startup/ Stop	Allowable Output Shaft O.H.L.	Allowable Output Shaft Thrust Load	Internal Moment of Inertia (Input Shaft Equivalent)		Drawings
											Other than Flange Type K75	Flange Type K75	
							N·m	N·m	N	N	$\times10^{-4}$kg·m^2		
AFCZ	10	L/H	1/3	1/3	M/L	100	1.49	2.0	395	158	0.138	—	P.830
AFCZ	12	L/H	1/3	1/3	M/L	200	2.37	4.6	500	200	0.288	—	P.831
AFCZ	15	L/H	1/3	1/3	M/L	400	3.80	10.4	785	314	0.378	—	P.833
AFCZ	18	L/H	1/3	1/3	M/L	750	7.23	19.4	980	392	1.236	—	P.835
AFCZ	22	L/H	1/3	1/3	M/L	1000	12.42	25.9	1050	420	5.700	—	P.837
AFCZ	28	L/H	1/3	1/3	M/L	2000	31.90	54.4	1200	480	7.190	11.11	P.839
AFCZ	32	L/H	1/3	1/3	M/L	3000	42.41	81.6	1370	548	9.449	12.95	P.841
AFCZ	10	L/H	1/5	1/5	M/L	100	2.34	3.3	490	188.5	0.132	—	P.830
AFCZ	12	L/H	1/5	1/5	M/L	200	3.21	7.7	650	250	0.263	—	P.831
AFCZ	15	L/H	1/5	1/5	M/L	400	6.62	17.3	980	377	0.333	—	P.833
AFCZ	18	L/H	1/5	1/5	M/L	750	10.43	32.4	1180	454	1.101	—	P.835
AFCZ	22	L/H	1/5	1/5	M/L	1000	22.99	43.1	1250	481	5.459	—	P.837
AFCZ	28	L/H	1/5	1/5	M/L	2000	37.93	90.7	1470	565	6.215	10.14	P.839
AFCZ	32	L/H	1/5	1/5	M/L	3000	53.96	136.0	1670	642	8.770	12.27	P.841
AFCZ	12	L/H	1/7.5	2/15	M/L	100	2.31	4.6	560	215	0.132	—	P.816
AFCZ	15	L/H	1/7.5	2/15	M/L	200	5.70	11.1	800	308	0.290	—	P.833
AFCZ	18	L/H	1/7.5	2/15	M/L	400	8.34	22.2	1120	431	0.391	—	P.834/ P.835
AFCZ	22	L/H	1/7.5	2/15	M/L	750	19.75	41.6	1370	527	1.311	—	P.836/ P.837
AFCZ	28	L/H	1/7.5	2/15	M/L	1000	33.07	64.7	1480	569	5.509	—	P.839
AFCZ	32	L/H	1/7.5	2/15	M/L	2000	51.70	116.6	1670	642	7.229	10.73	P.841
AFCZ	12	L/H	1/10	1/10	M/L	100	2.90	6.1	650	232	0.130	—	P.820
AFCZ	15	L/H	1/10	1/10	M/L	200	6.34	14.8	980	350	0.281	—	P.833
AFCZ	18	L/H	1/10	1/10	M/L	400	10.30	29.6	1250	446	0.379	—	P.834/ P.835
AFCZ	22	L/H	1/10	1/10	M/L	750	23.83	55.5	1550	554	1.229	—	P.836/ P.837
AFCZ	28	L/H	1/10	1/10	M/L	1000	33.65	73.9	1750	625	5.291	—	P.839
AFCZ	32	L/H	1/10	1/10	M/L	2000	62.17	155.5	1960	700	6.849	10.35	P.841

1-1. Performance Tables

Mounting Type	Output Shaft Diameter	Shaft Arrangement	Nominal Reduction Ratio	Actual Reduction Ratio	Precision	Power Class	Allowable Average Torque (3000 r/min)	Allowable Peak Torque of Startup/ Stop	Allowable Output Shaft O.H.L.	Allowable Output Shaft Thrust Load	Internal Moment of Inertia (Input Shaft Equivalent)		Drawings
											Other than Flange Type K75	Flange Type K75	
							N·m	N·m	N	N	$\times 10^{-4}$kg·m^2		
AFCZ	15	L/H	1/10	1/10	M/L	100	3.76	6.4	980	350	0.136	—	P.832
AFCZ	18	L/H	1/10	1/10	M/L	200	6.42	16.4	1250	446	0.274	—	P.834
AFCZ	22	L/H	1/10	1/10	M/L	400	13.24	32.7	1550	554	0.359	—	P.836
AFCZ	28	L/H	1/10	1/10	M/L	750	20.86	63.0	1960	700	1.091	—	P.838
AFCZ	32	L/H	1/10	1/10	M/L	1000	45.98	86.3	2350	839	5.656	—	P.840/ P.841
AFCZ	15	L/H	1/12	2/25	M/L	100	4.75	8.0	1020	364	0.133	—	P.832
AFCZ	18	L/H	1/12	2/25	M/L	200	8.03	20.5	1350	482	0.269	—	P.834
AFCZ	22	L/H	1/12	2/25	M	400	16.55	40.9	1640	586	0.347	—	P.836
AFCZ	22	L/H	1/12	19/235	L	400	16.55	40.9	1640	586	0.347	—	
AFCZ	28	L/H	1/12	2/25	M	750	26.08	78.8	2110	754	1.062	—	P.838
AFCZ	28	L/H	1/12	19/235	L	750	26.08	78.8	2110	754	1.062	—	
AFCZ	32	L/H	1/12	2/25	M	1000	57.48	107.8	2530	904	5.592	—	P.840/ P.841
AFCZ	32	L/H	1/12	19/235	L	1000	57.48	107.8	2530	904	5.592	—	P.840/ P.841
AFCZ	15	L/H	1/15	1/15	M/L	100	5.68	9.6	1060	379	0.132	—	P.832
AFCZ	18	L/H	1/15	1/15	M/L	200	9.63	24.6	1470	525	0.266	—	P.834
AFCZ	22	L/H	1/15	1/15	M/L	400	19.86	49.1	1720	614	0.339	—	P.836
AFCZ	28	L/H	1/15	1/15	M/L	750	31.29	94.6	2250	804	1.042	—	P.838
AFCZ	32	L/H	1/15	1/15	M/L	1000	68.97	129.4	2700	964	5.558	—	P.840/ P.841
AFCZ	15	L/H	1/20	1/20	M/L	100	7.59	12.8	1180	421	0.130	—	P.832
AFCZ	18	L/H	1/20	1/20	M/L	200	12.84	32.7	1570	561	0.263	—	P.834
AFCZ	22	L/H	1/20	1/20	M/L	400	26.48	65.5	2010	718	0.330	—	P.836
AFCZ	28	L/H	1/20	1/20	M/L	750	41.72	126.1	2500	893	1.021	—	P.838
AFCZ	32	L/H	1/20	1/20	M/L	1000	91.96	172.5	3000	1071	5.514	—	P.840/ P.841
AFCZ	15	L/H	1/25	1/25	M/L	100	9.44	16.0	1250	446	0.129	—	P.832
AFCZ	18	L/H	1/25	1/25	M/L	200	16.05	40.9	1670	596	0.260	—	P.834
AFCZ	22	L/H	1/25	1/25	M/L	400	33.10	81.8	2160	771	0.323	—	P.836
AFCZ	28	L/H	1/25	1/25	M/L	750	52.15	135.1	2740	979	1.008	—	P.838
AFCZ	32	L/H	1/25	1/25	M/L	1000	101.08	215.7	3280	1171	5.487	—	P.840/ P.841
AFCZ	15	L/H	1/30	1/30	M/L	100	10.23	19.2	1330	475	0.128	—	P.832
AFCZ	18	L/H	1/30	1/30	M/L	200	17.74	49.1	1810	646	0.259	—	P.834
AFCZ	22	L/H	1/30	1/30	M/L	400	33.27	98.2	2300	821	0.319	—	P.836
AFCZ	28	L/H	1/30	1/30	M/L	750	60.37	162.1	2940	1050	0.999	—	P.838
AFCZ	32	L/H	1/30	1/30	M/L	1000	91.32	258.8	3520	1257	5.468	—	P.840/ P.841
AFCZ	18	L/H	1/40	1/40	M/L	100	11.75	26.5	1650	550	0.128	—	P.834
AFCZ	22	L/H	1/40	1/40	M/L	200	25.21	56.1	2250	750	0.277	—	P.836
AFCZ	28	L/H	1/40	1/40	M/L	400	41.20	115.3	2900	967	0.369	—	P.838
AFCZ	32	L/H	1/40	1/40	M/L	750	95.32	227.5	3480	1160	1.220	—	P.840
AFCZ	18	L/H	1/50	1/50	M/L	100	14.72	33.2	1750	583	0.128	—	P.834
AFCZ	22	L/H	1/50	1/50	M/L	200	31.55	70.2	2480	827	0.275	—	P.836
AFCZ	28	L/H	1/50	1/50	M/L	400	63.89	144.1	3150	1050	0.366	—	P.838
AFCZ	32	L/H	1/50	1/50	M/L	750	101.08	237.0	3630	1210	1.209	—	P.840
AFCZ	18	L/H	1/60	1/60	M/L	100	17.62	39.8	1850	617	0.127	—	P.834
AFCZ	22	L/H	1/60	1/60	M/L	200	33.27	84.2	2700	900	0.274	—	P.836
AFCZ	28	L/H	1/60	1/60	M/L	400	61.10	144.1	3380	1127	0.364	—	P.838
AFCZ	32	L/H	1/60	1/60	M/L	750	118.90	284.4	3780	1260	1.204	—	P.840

1-2. Drawings

AFC Type Right Angle Hollow Bore | Shaft Diameter **12** Backlash 3 arc min/30 arc min

<Figure 1>

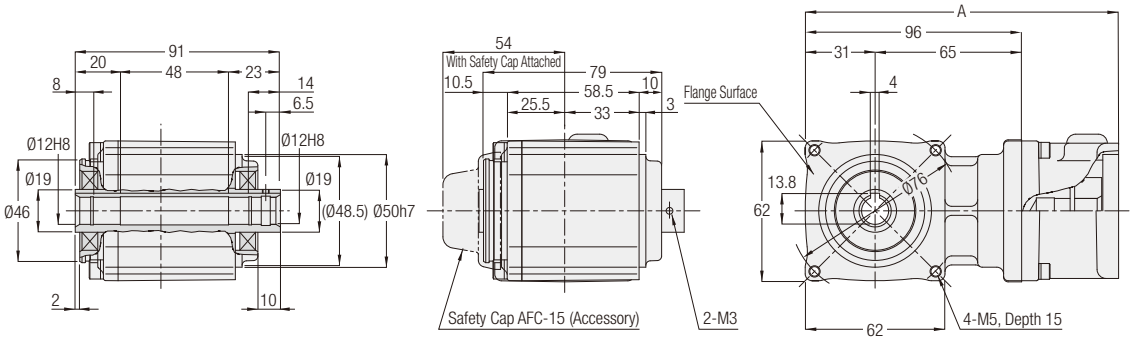

Motor Power Class	Part Number	Reduction Ratio	Figure Number	Flange Type	Approx. Weight (kg)	A
100 W	AFCZ12S-∗∗∗□100△	7.5, 10	1	S1/S3	1.5	134
100 W	AFCZ12S-∗∗∗□100△	7.5, 10	1	S6	1.5	133
200 W	AFCZ12S-∗∗∗□200△	3, 5	1	S1/S2/S3	1.5	139
200 W	AFCZ12S-∗∗∗□200△	3, 5	1	S6	1.5	135
200 W	AFCZ12S-∗∗∗□200△	3, 5	1	S7	1.5	138

Note: A reduction ratio will be indicated as ∗∗∗ in the nomenclature. In addition, backlash will be indicated as □, and a flange type will be indicated as △.
Note: Please refer to pages 905 to 911 for the detailed dimensions of the input shaft area.
Note: Please refer to page 816 for the performance table.

AFC Type Right Angle Hollow Bore | Shaft Diameter **15** | Backlash 3 arc min/30 arc min

<Figure 1>

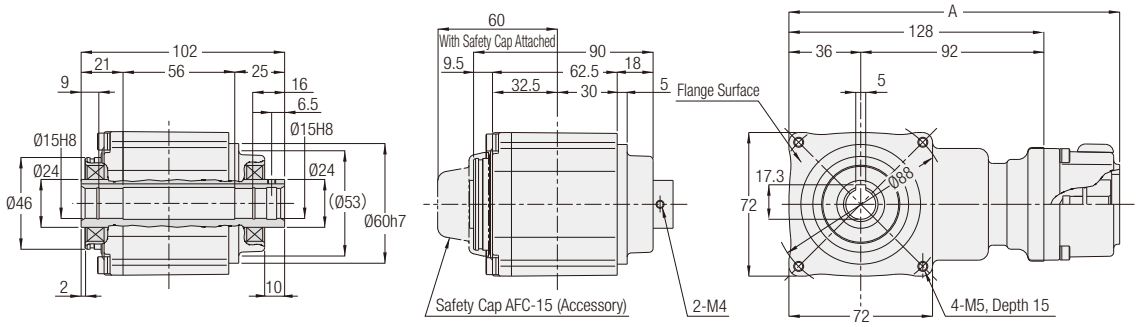

<Figure 2>

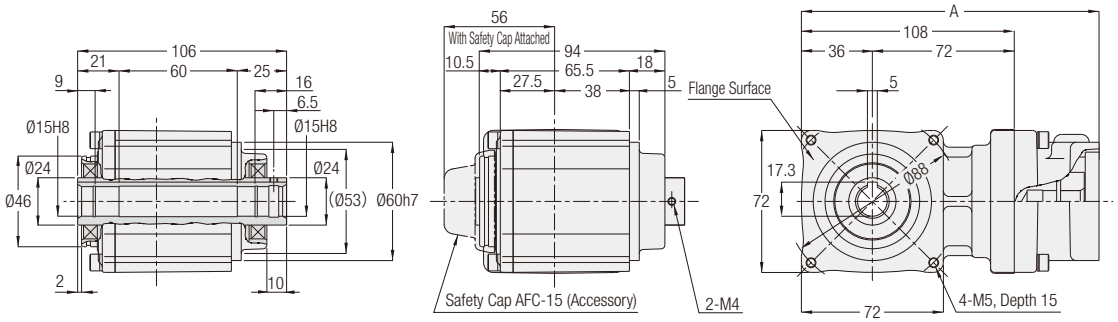

Motor Power Class	Part Number	Reduction Ratio	Figure Number	Flange Type	Approx. Weight (kg)	A
100 W	AFCZ15S-∗∗∗□100△	10, 12, 15, 20, 25, 30	1	S1/S3	1.9	166
100 W	AFCZ15S-∗∗∗□100△	10, 12, 15, 20, 25, 30	1	S6	1.9	165
200 W	AFCZ15S-∗∗∗□200△	7.5, 10	2	S1/S2/S3	2.5	151
200 W	AFCZ15S-∗∗∗□200△	7.5, 10	2	S6	2.5	147
200 W	AFCZ15S-∗∗∗□200△	7.5, 10	2	S7	2.5	150
400 W	AFCZ15S-∗∗∗□400△	3,5	2	S1/S3	2.5	151
400 W	AFCZ15S-∗∗∗□400△	3,5	2	S6	2.5	147
400 W	AFCZ15S-∗∗∗□400△	3,5	2	S7	2.5	150

Note: A reduction ratio will be indicated as ∗∗∗ in the nomenclature. In addition, backlash will be indicated as □, and a flange type will be indicated as △.
Note: Please refer to pages 905 to 911 for the detailed dimensions of the input shaft area.
Note: Please refer to page 816 for the performance table.

AFC Type Right Angle Hollow Bore Shaft Diameter 18 Backlash 3 arc min/30 arc min

<Figure 1>

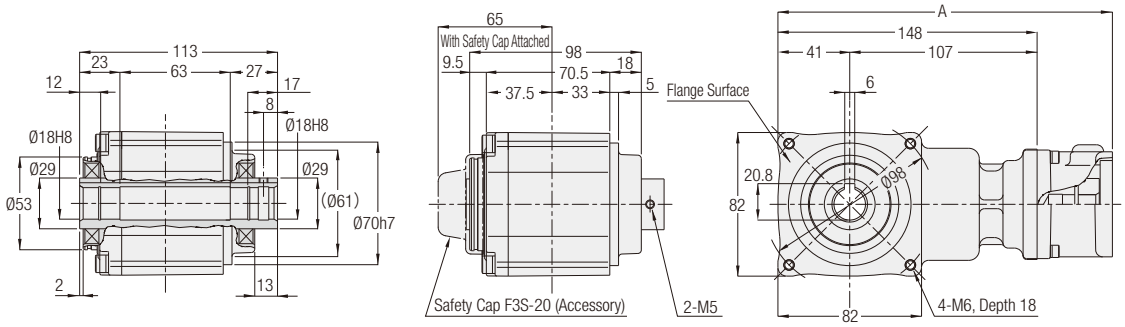

<Figure 2>

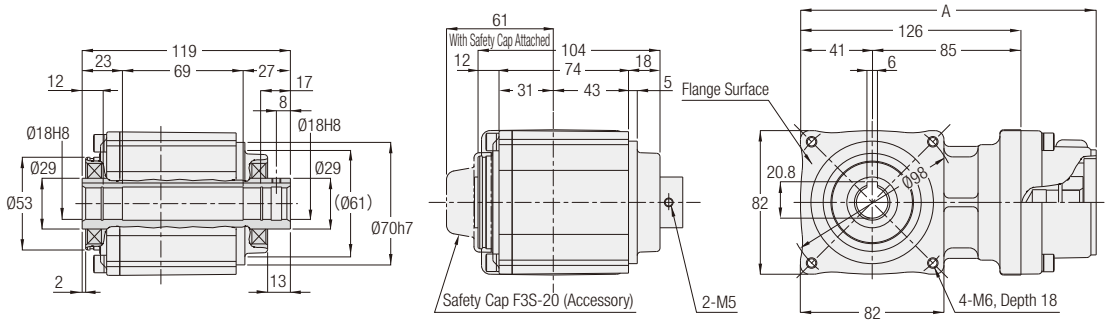

Motor Power Class	Part Number	Reduction Ratio	Figure Number	Flange Type	Approx. Weight (kg)	A
100 W	AFCZ18S-∗∗∗□100△	40, 50, 60	1	S1/S3	2.7	186
100 W	AFCZ18S-∗∗∗□100△	40, 50, 60	1	S6	2.7	185
200 W	AFCZ18S-∗∗∗□200△	10, 12, 15, 20, 25, 30	1	S1/S2/S3	2.7	191
200 W	AFCZ18S-∗∗∗□200△	10, 12, 15, 20, 25, 30	1	S6	2.7	187
200 W	AFCZ18S-∗∗∗□200△	10, 12, 15, 20, 25, 30	1	S7	2.7	190
400 W	AFCZ18S-∗∗∗□400△	7.5, 10	2	S1/S3	3.2	169
400 W	AFCZ18S-∗∗∗□400△	7.5, 10	2	S7	3.2	168

Note: A reduction ratio will be indicated as ∗∗∗ in the nomenclature. In addition, backlash will be indicated as □, and a flange type will be indicated as △.
Note: Please refer to pages 905 to 911 for the detailed dimensions of the input shaft area.
Note: Please refer to page 816 for the performance table.

<Figure 3>

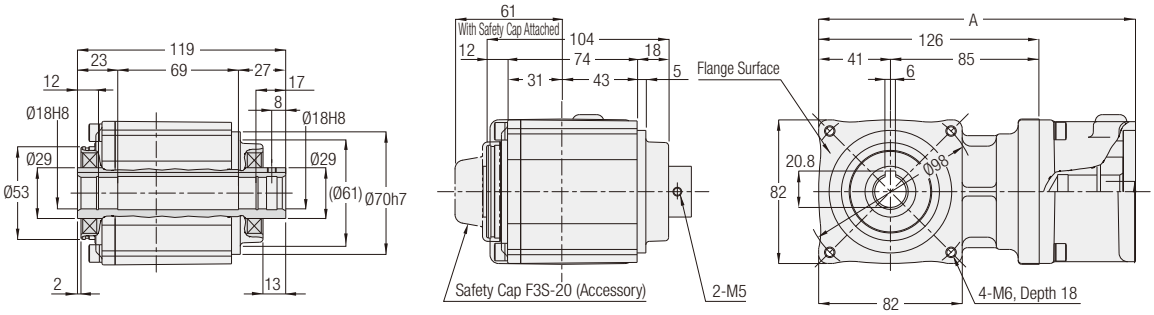

<Figure 4>

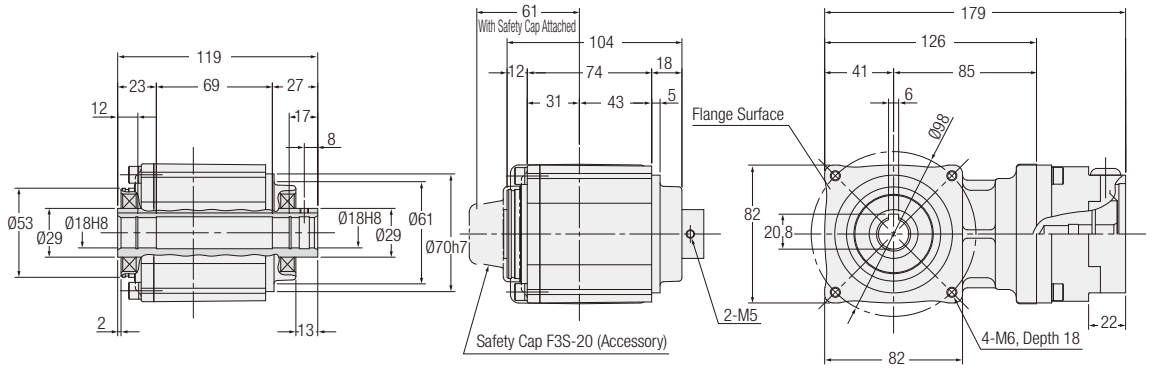

Motor Power Class	Part Number	Reduction Ratio	Figure Number	Flange Type	Approx. Weight (kg)	A
400 W	AFCZ18S-∗∗∗□400△	7.5, 10	3	S6	3.2	165
750 W	AFCZ18S-∗∗∗□750△	3, 5	3	S1/S2/S3/S4/S9	3.2	181
750 W	AFCZ18S-∗∗∗□750△	3, 5	4	SA	3.2	—

Note: A reduction ratio will be indicated as ∗∗∗ in the nomenclature. In addition, backlash will be indicated as □, and a flange type will be indicated as △.
Note: Please refer to pages 905 to 911 for the detailed dimensions of the input shaft area.
Note: Please refer to page 816 for the performance table.

AFC Type Right Angle Hollow Bore Shaft Diameter 22 Backlash 3 arc min/30 arc min

<Figure 1>

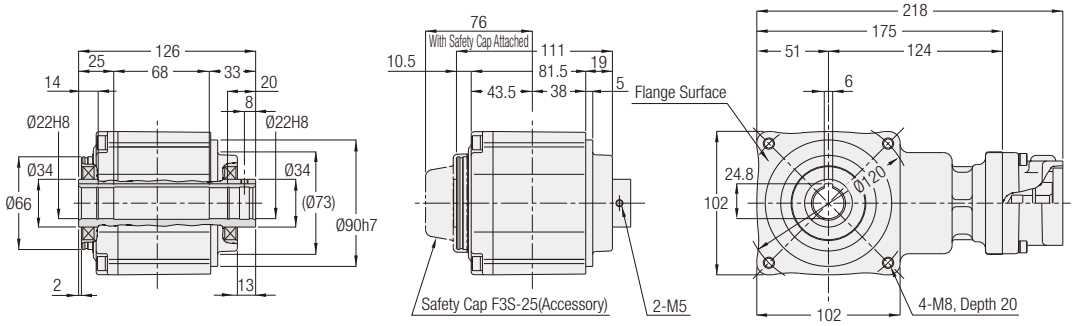

<Figure 2>

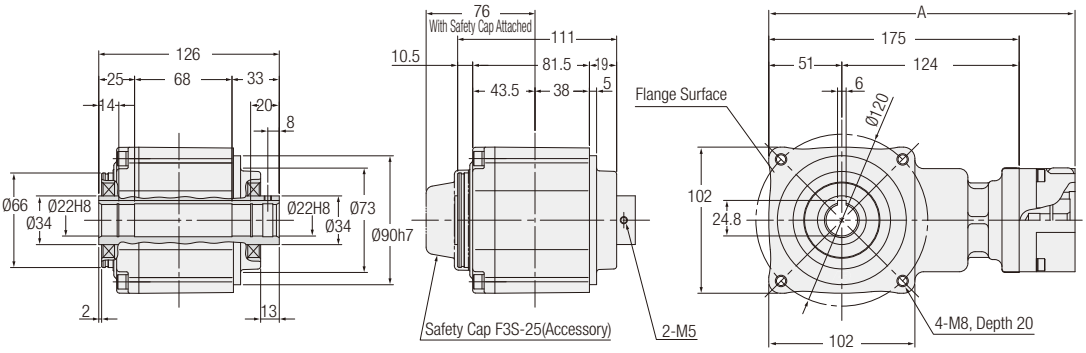

<Figure 3>

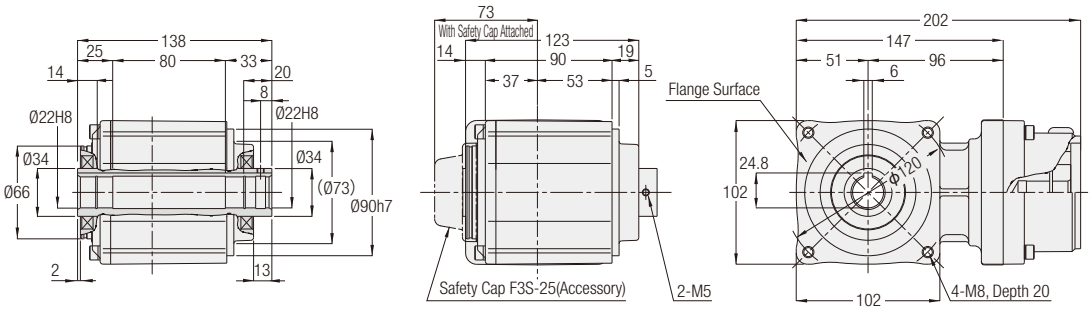

Motor Power Class	Part Number	Reduction Ratio	Figure Number	Flange Type	Approx. Weight (kg)	A
200 W	AFCZ22S-∗∗∗□200△	40, 50, 60	1	S1/S2/S3	4.3	—
200 W	AFCZ22S-∗∗∗□200△	40, 50, 60	2	S6	4.3	214
200 W	AFCZ22S-∗∗∗□200△	40, 50, 60	2	S7	4.3	217
400 W	AFCZ22S-∗∗∗□400△	10, 12, 15, 20, 25, 30	1	S1/S3	4.3	—
400 W	AFCZ22S-∗∗∗□400△	10, 12, 15, 20, 25, 30	2	S6	4.3	214
400 W	AFCZ22S-∗∗∗□400△	10, 12, 15, 20, 25, 30	2	S7	4.3	217
750 W	AFCZ22S-∗∗∗□750△	7.5, 10	3	S1/S2/S3/S4/S9	5.4	—

Note: A reduction ratio will be indicated as ∗∗∗ in the nomenclature. In addition, backlash will be indicated as □, and a flange type will be indicated as △.
Note: Please refer to pages 905 to 911 for the detailed dimensions of the input shaft area.
Note: Please refer to page 816 for the performance table.

<Figure 4>

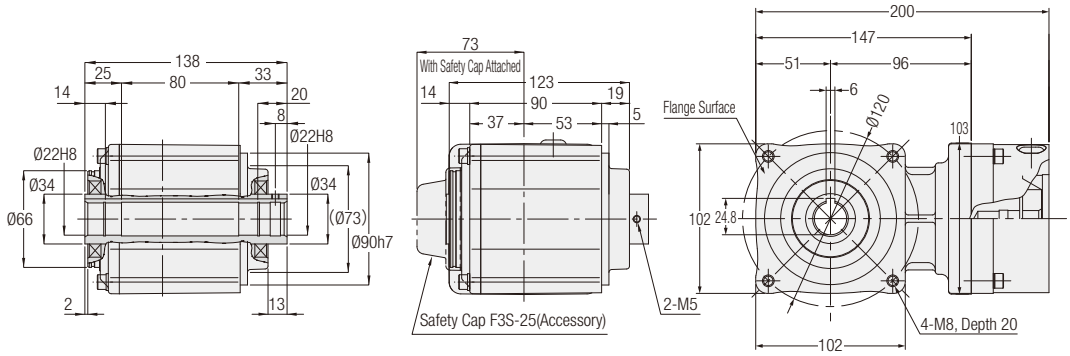

<Figure 5>

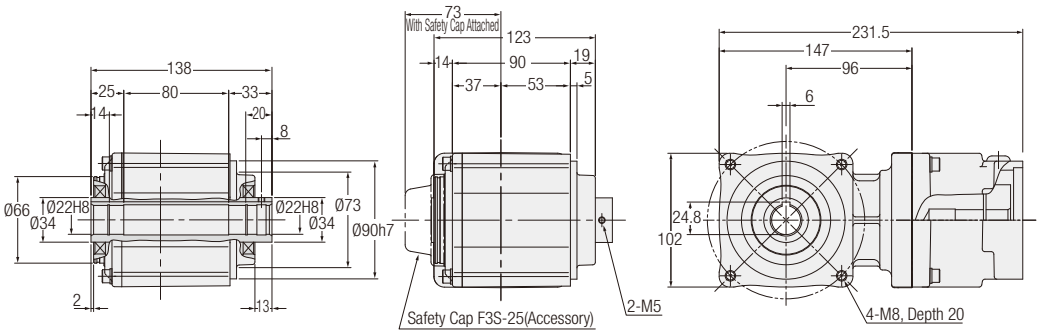

Motor Power Class	Part Number	Reduction Ratio	Figure Number	Flange Type	Approx. Weight (kg)	A
750 W	AFCZ22S-∗∗∗□750△	7.5, 10	4	SA	5.4	200
1000 W	AFCZ22S-∗∗∗□1000△	3, 5	4	K13/K22/K23/K61	6.2	231.5
1000 W	AFCZ22S-∗∗∗□1000△	3, 5	5	KC9	6.2	—

Note: A reduction ratio will be indicated as ∗∗∗ in the nomenclature. In addition, backlash will be indicated as □, and a flange type will be indicated as △.
Note: Please refer to pages 905 to 911 for the detailed dimensions of the input shaft area.
Note: Please refer to page 816 for the performance table.

AFC Type Right Angle Hollow Bore Shaft Diameter 28 Backlash 3 arc min/30 arc min

The values in parentheses ( ) are the indications for flange type K75.

<Figure 1>

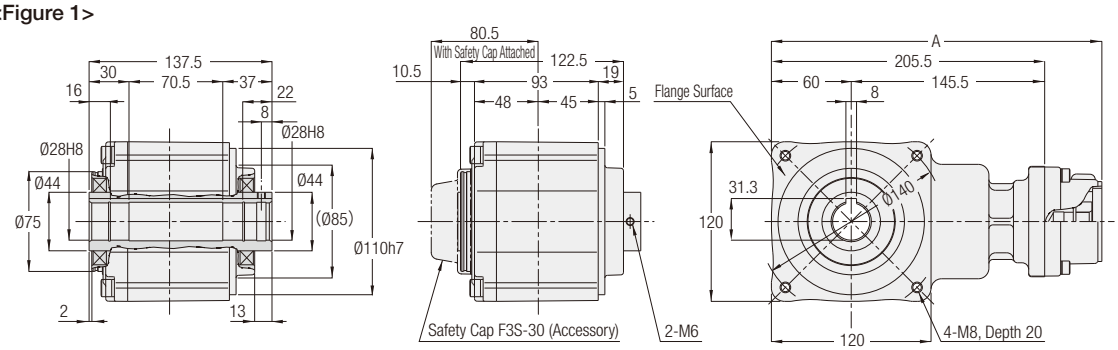

<Figure 2>

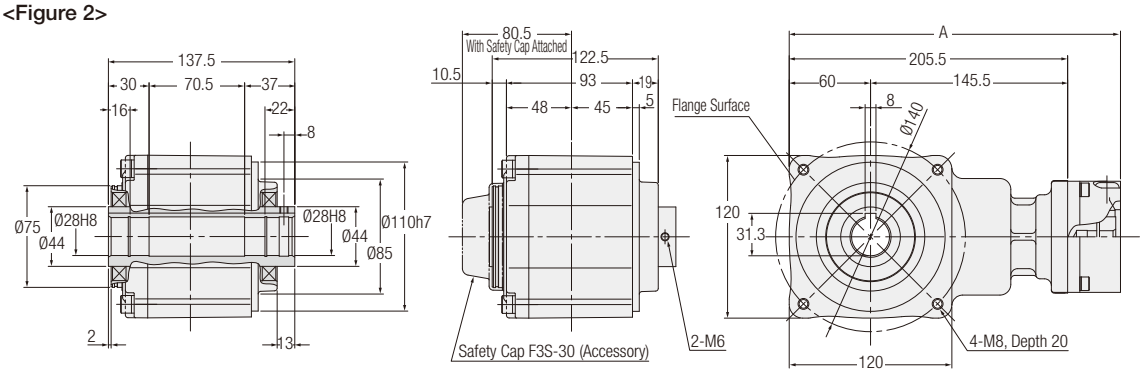

<Figure 3>

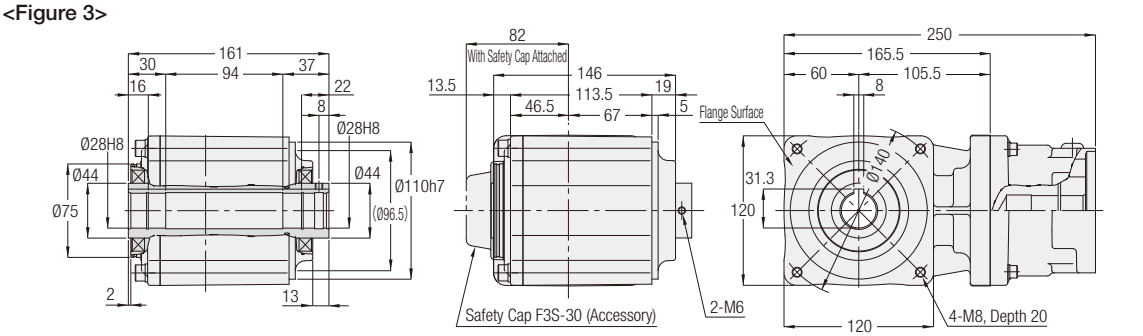

Motor Power Class	Part Number	Reduction Ratio	Figure Number	Flange Type	Approx. Weight (kg)	A
400 W	AFCZ28S-∗∗∗□400△	40, 50, 60	1	S1/S3	6.6	248.5
400 W	AFCZ28S-∗∗∗□400△	40, 50, 60	2	S6	6.6	244.5
400 W	AFCZ28S-∗∗∗□400△	40, 50, 60	2	S7	6.6	247.5
750 W	AFCZ28S-∗∗∗□750△	10, 12, 15, 20, 25, 30	1	S1/S2/S3/S4/S9	6.6	260.5
750 W	AFCZ28S-∗∗∗□750△	10, 12, 15, 20, 25, 30	1	SA	6.6	258.5
1000 W	AFCZ28S-∗∗∗□1000△	7.5, 10	3	K13/K22/K23/K61/KC9	8.8	—

Note: A reduction ratio will be indicated as ∗∗∗ in the nomenclature. In addition, backlash will be indicated as □, and a flange type will be indicated as △.
Note: Please refer to pages 905 to 911 for the detailed dimensions of the input shaft area.
Note: The drawings shown in the dark color are outline drawings of flange type K75.
Note: Please refer to page 816 for the performance table.

<Figure 4>

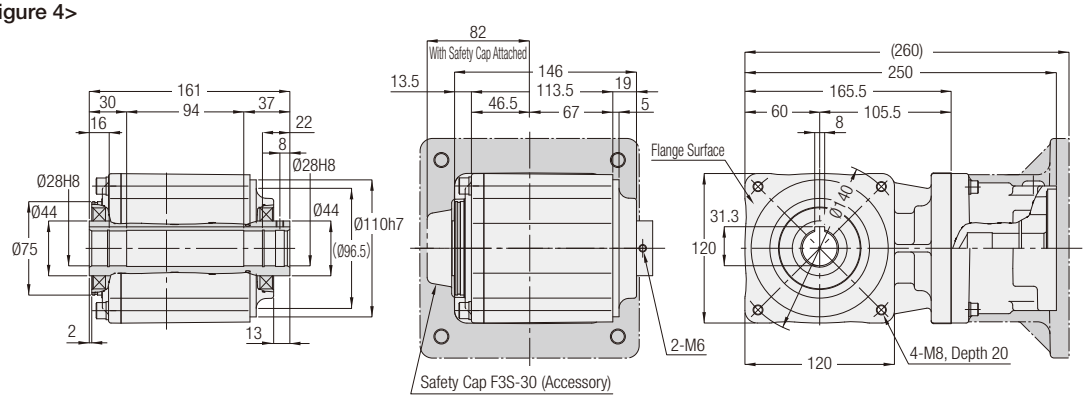

Motor Power Class	Part Number	Reduction Ratio	Figure Number	Flange Type	Approx. Weight (kg)
2000 W	AFCZ28S-∗∗∗□2000△	3, 5	4	K13/K21/K22/K23/K31/K32/K33/K41	8.8
2000 W	AFCZ28S-∗∗∗□2000△	3, 5	4	K75	9.8

Note: A reduction ratio will be indicated as ∗∗∗ in the nomenclature. In addition, backlash will be indicated as □, and a flange type will be indicated as △.
Note: Please refer to pages 905 to 911 for the detailed dimensions of the input shaft area.
Note: The drawings shown in the dark color are outline drawings of flange type K75.
Note: Please refer to page 816 for the performance table.

AFC Type Right Angle Hollow Bore Shaft Diameter 32 Backlash 3 arc min/30 arc min

The values in parentheses ( ) are the indications for flange type K75.

<Figure 1>

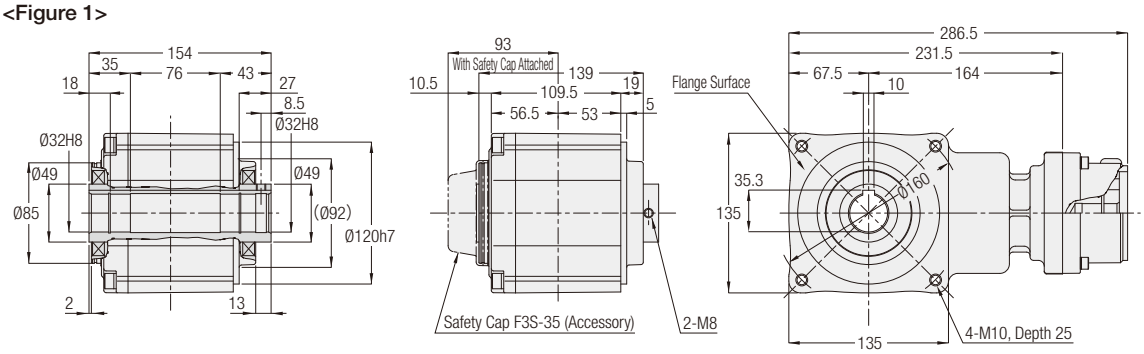

<Figure 2>

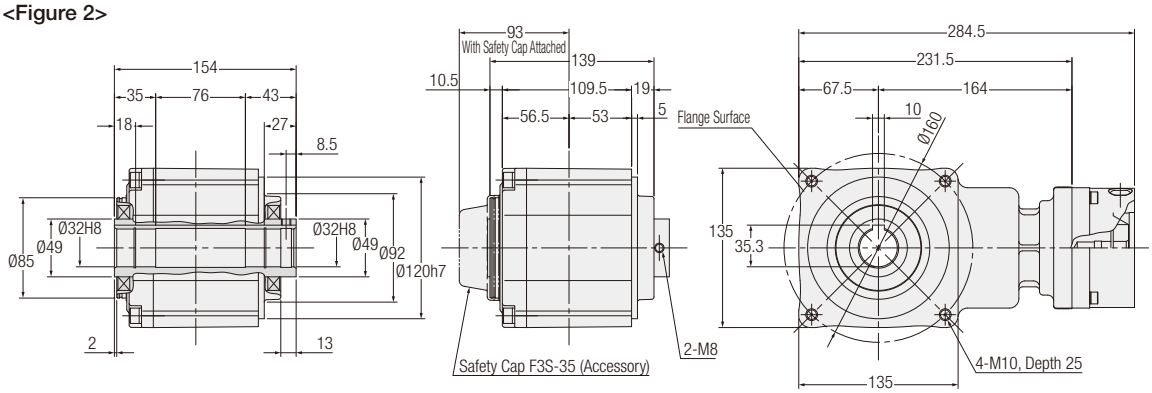

Motor Power Class	Part Number	Reduction Ratio	Figure Number	Flange Type	Approx. Weight (kg)
750 W	AFCZ32S-✻✻✻□750△	40, 50, 60	1	S1/S2/S3/S4/S9	10
750 W	AFCZ32S-✻✻✻□750△	40, 50, 60	2	SA	10

Note: A reduction ratio will be indicated as ✻✻✻ in the nomenclature. In addition, backlash will be indicated as □, and a flange type will be indicated as △.
Note: Please refer to pages 905 to 911 for the detailed dimensions of the input shaft area.
Note: The drawings shown in the dark color are outline drawings of flange type K75.
Note: Please refer to page 816 for the performance table.

<Figure 3>

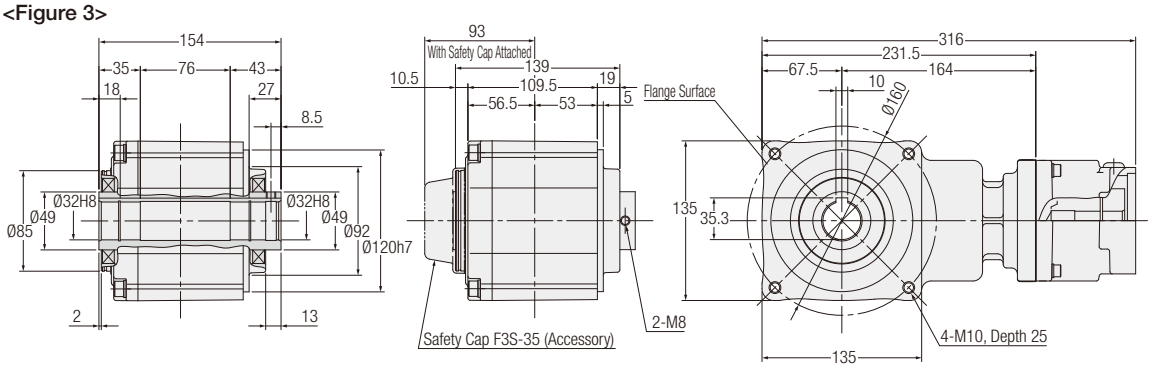

<Figure 4>

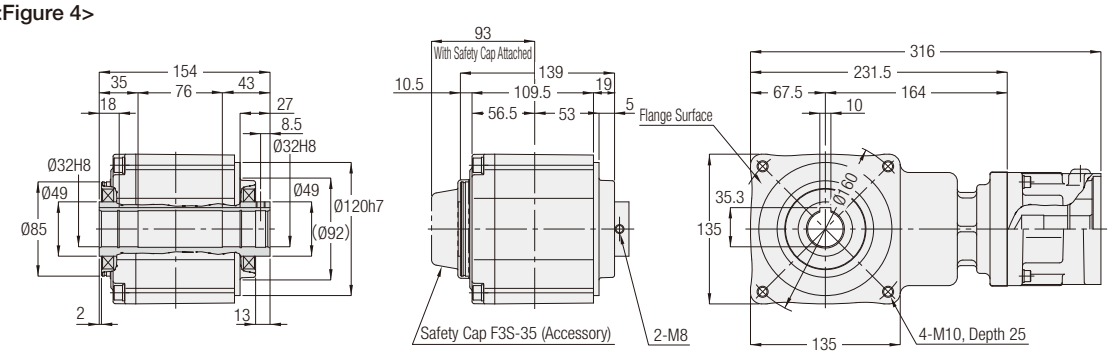

<Figure 5>

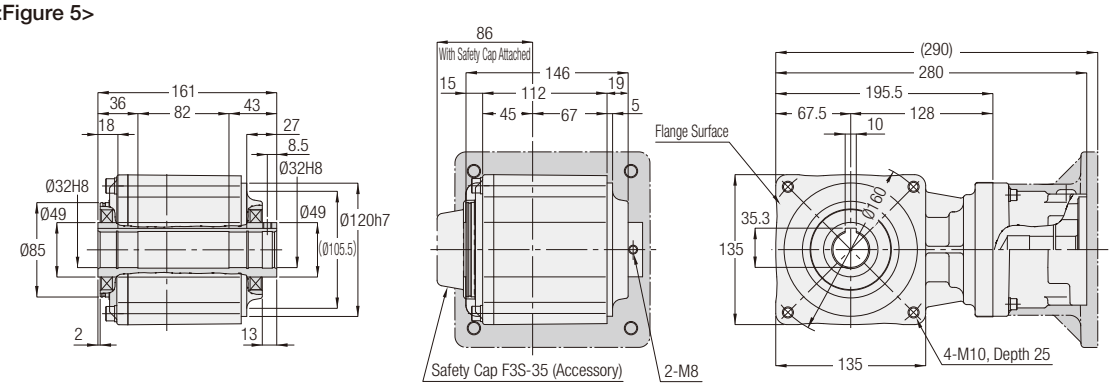

Motor Power Class	Part Number	Reduction Ratio	Figure Number	Flange Type	Approx. Weight (kg)
1000 W	AFCZ32S-∗∗∗□1000△	10, 12, 15, 20, 25, 30	3	KC9	10.5
1000 W	AFCZ32S-∗∗∗□1000△	10, 12, 15, 20, 25, 30	4	K13/K22/K23/K61	10.5
2000 W	AFCZ32S-∗∗∗□2000△	7.5, 10	5	K13/K21/K22/K23/K31/K32/K33/K41	11
2000 W	AFCZ32S-∗∗∗□2000△	7.5, 10	5	K75	9.8
3000 W	AFCZ32S-∗∗∗□3000△	3, 5	5	K13/K21/K22/K23/K32/K33/K34/K52	11
3000 W	AFCZ32S-∗∗∗□3000△	3, 5	5	K75/KBC	12

Note: A reduction ratio will be indicated as ∗∗∗ in the nomenclature. In addition, backlash will be indicated as □, and a flange type will be indicated as △.
Note: Please refer to pages 905 to 911 for the detailed dimensions of the input shaft area.
Note: The drawings shown in the dark color are outline drawings of flange type K75.
Note: Please refer to page 816 for the performance table.

AFC Type Right Angle Shaft Shaft Diameter 10 Backlash 3 arc min/30 arc min

<Figure 1>

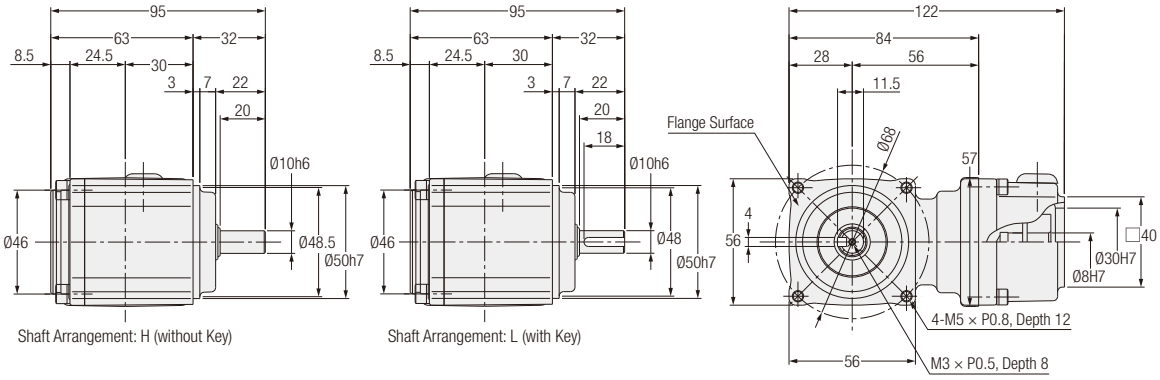

Motor Power Class	Part Number	Reduction Ratio	Figure Number	Flange Type	Approx. Weight (kg)
100 W	AFCZ10#-***□100△	3, 5	1	S1/S3/S6	1.5

Note: A shaft arrangement (H, L) will be indicated as # in the nomenclature. In addition, a reduction ratio will be indicated as ***, backlash will be indicated as □, and a flange type will be indicated as △.
Note: Please refer to pages 905 to 911 for the detailed dimensions of the input shaft area.
Note: Please refer to page 818 for the performance table.

AFC Type Right Angle Shaft | Shaft Diameter **12** | Backlash 3 arc min/30 arc min

<Figure 1>

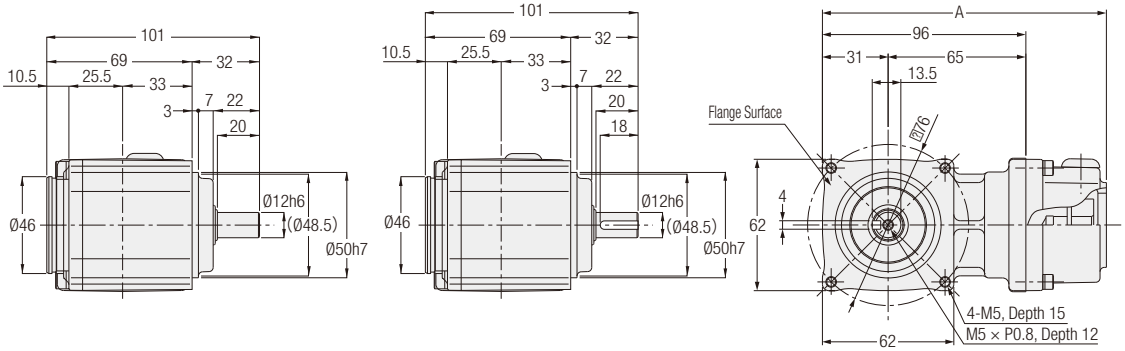

<Figure 2>

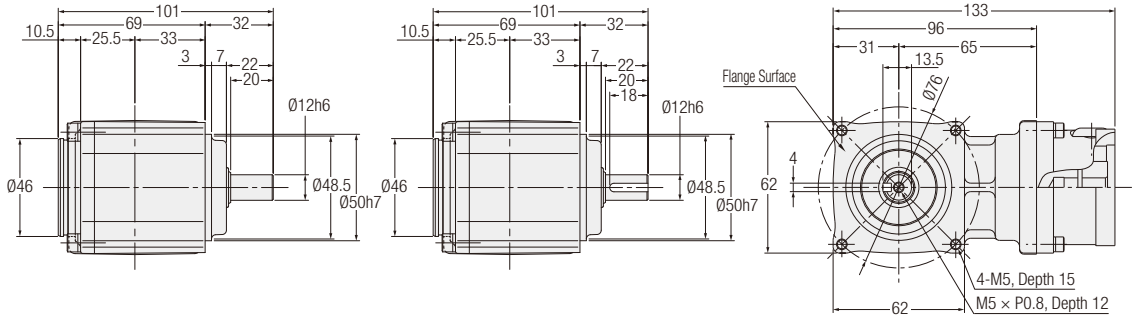

<Figure 3>

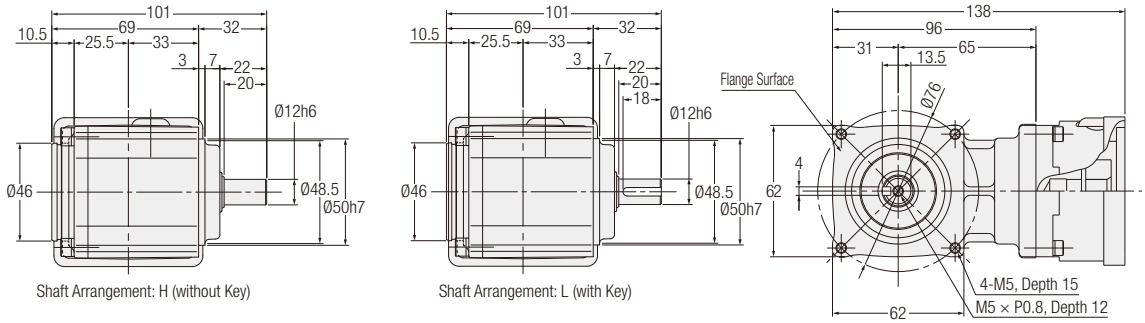

Shaft Arrangement: H (without Key)

Shaft Arrangement: L (with Key)

Motor Power Class	Part Number	Reduction Ratio	Figure Number	Flange Type	Approx. Weight (kg)	A
100 W	AFCZ12#-***□100△	7.5, 10	1	S1/S3	1.5	134
100 W	AFCZ12#-***□100△	7.5, 10	2	S6	1.5	—
200 W	AFCZ12#-***□200△	5	1	S1/S2/S3	1.5	139
200 W	AFCZ12#-***□200△	5	1	S6	1.5	135
200 W	AFCZ12#-***□200△	5	3	S7	1.5	—

Note: A shaft arrangement (H, L) will be indicated as # in the nomenclature. In addition, a reduction ratio will be indicated as ***, backlash will be indicated as □, and a flange type will be indicated as △.
Note: Please refer to pages 905 to 911 for the detailed dimensions of the input shaft area.
Note: Please refer to page 818 for the performance table.

AFC Type Right Angle Shaft Shaft Diameter 15 Backlash 3 arc min/30 arc min

<Figure 1>

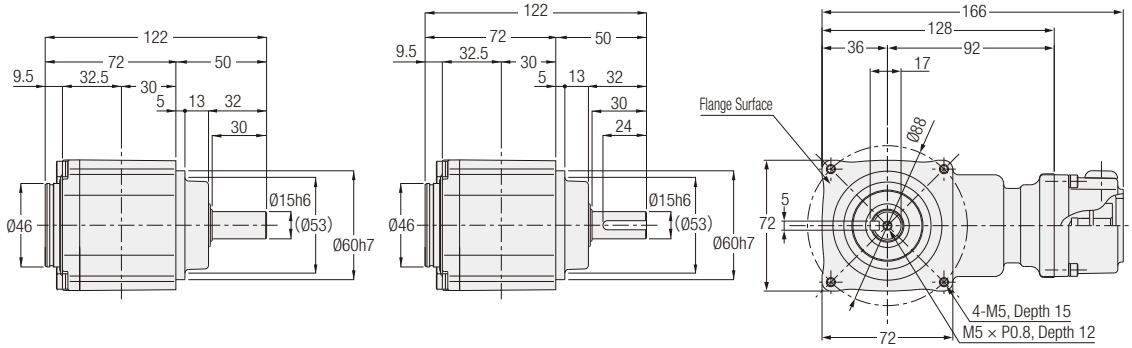

<Figure 2>

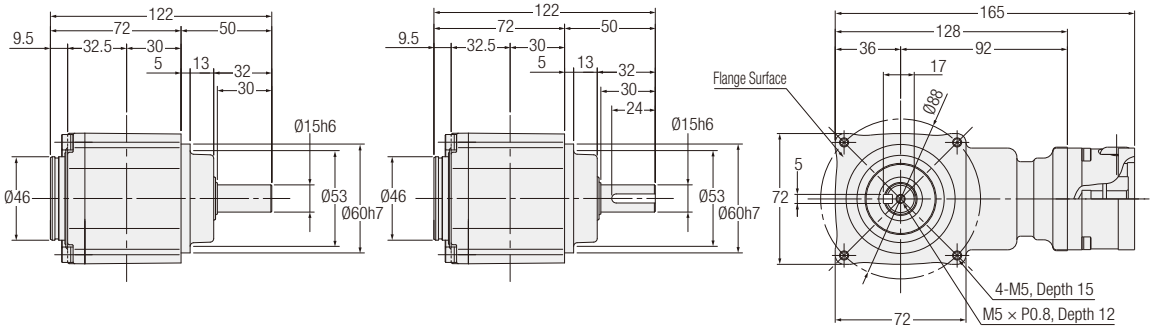

Motor Power Class	Part Number	Reduction Ratio	Figure Number	Flange Type	Approx. Weight (kg)
100 W	AFCZ15#-∗∗∗□100△	10, 12, 15, 20, 25, 30	1	S1/S3	2.0
100 W	AFCZ15#-∗∗∗□100△	10, 12, 15, 20, 25, 30	2	S6	2.0

Note: A shaft arrangement (H, L) will be indicated as # in the nomenclature. In addition, a reduction ratio will be indicated as ∗∗∗, backlash will be indicated as □, and a flange type will be indicated as △.
Note: Please refer to pages 905 to 911 for the detailed dimensions of the input shaft area.
Note: Please refer to page 818 for the performance table.

<Figure 3>

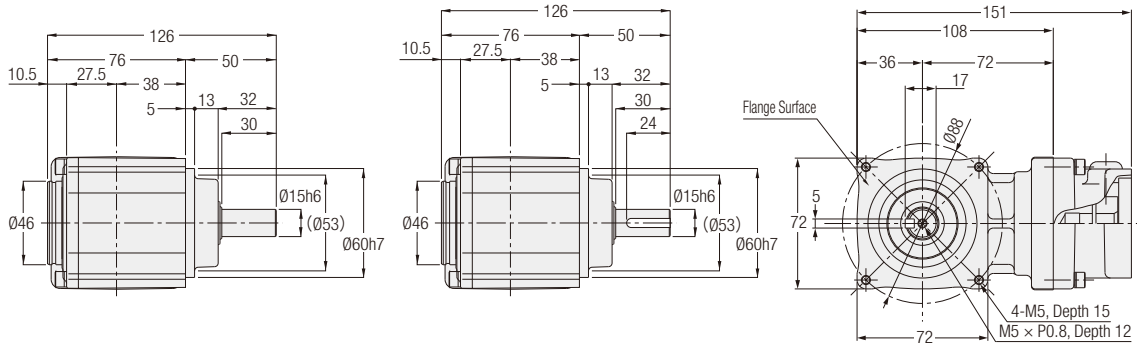

<Figure 4>

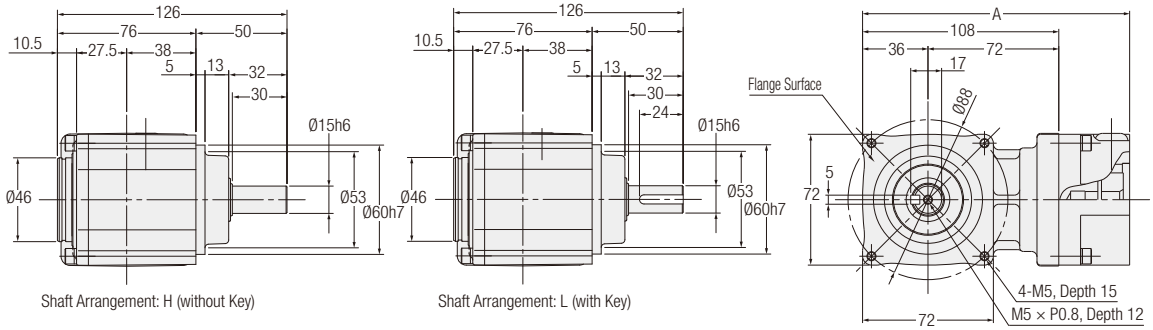

Shaft Arrangement: H (without Key)

Shaft Arrangement: L (with Key)

Motor Power Class	Part Number	Reduction Ratio	Figure Number	Flange Type	Approx. Weight (kg)	A
200 W	AFCZ15#-∗∗∗□200△	7.5, 10	3	S1/S2/S3	2.6	—
200 W	AFCZ15#-∗∗∗□200△	7.5, 10	4	S6	2.6	147
200 W	AFCZ15#-∗∗∗□200△	7.5, 10	4	S7	2.6	150
400 W	AFCZ15#-∗∗∗□400△	3, 5	3	S1/S3	2.6	—
400 W	AFCZ15#-∗∗∗□400△	3, 5	4	S6	2.6	147
400 W	AFCZ15#-∗∗∗□400△	3, 5	4	S7	2.6	150

Note: A shaft arrangement (H, L) will be indicated as # in the nomenclature. In addition, a reduction ratio will be indicated as ∗∗∗, backlash will be indicated as □, and a flange type will be indicated as △.
Note: Please refer to pages 905 to 911 for the detailed dimensions of the input shaft area.
Note: Please refer to page 818 for the performance table.

AFC Type Right Angle Shaft Shaft Diameter 18 Backlash 3 arc min/30 arc min

<Figure 1>

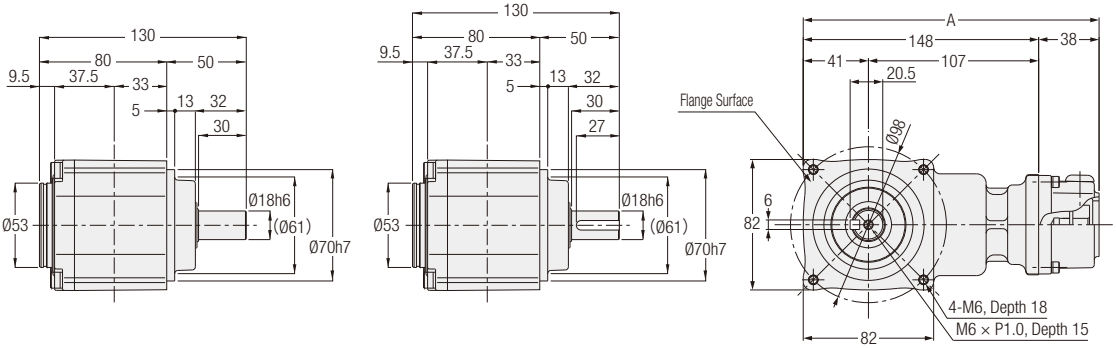

<Figure 2>

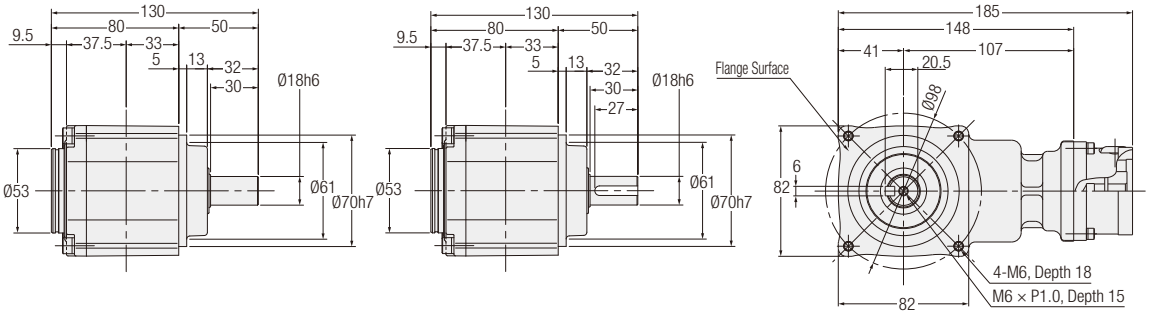

<Figure 3>

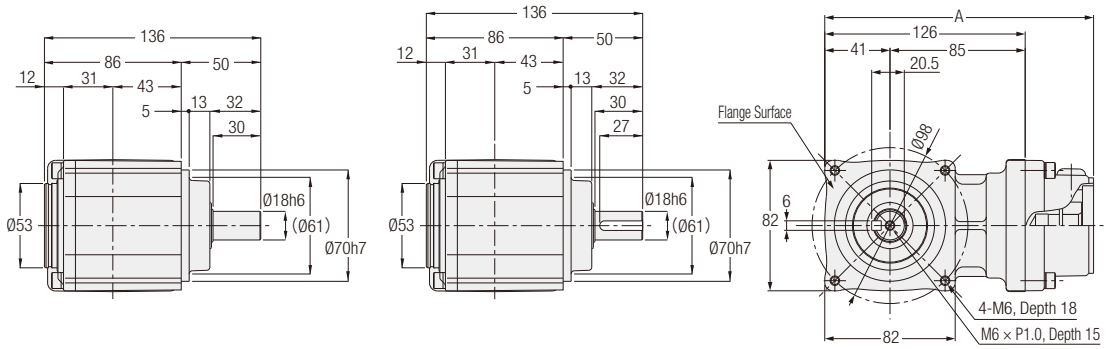

Motor Power Class	Part Number	Reduction Ratio	Figure Number	Flange Type	Approx. Weight (kg)	A
100 W	AFCZ18#-∗∗∗□100△	40, 50, 60	1	S1/S3	2.8	186
100 W	AFCZ18#-∗∗∗□100△	40, 50, 60	2	S6	2.8	—
200 W	AFCZ18#-∗∗∗□200△	10, 12, 15, 20, 25, 30	1	S1/S2/S3	2.8	191
200 W	AFCZ18#-∗∗∗□200△	10, 12, 15, 20, 25, 30	1	S6	2.8	187
200 W	AFCZ18#-∗∗∗□200△	10, 12, 15, 20, 25, 30	1	S7	2.8	190
400 W	AFCZ18#-∗∗∗□400△	7.5, 10	3	S1/S3	3.3	169
400 W	AFCZ18#-∗∗∗□400△	7.5, 10	3	S7	3.3	168

Note: A shaft arrangement (H, L) will be indicated as # in the nomenclature. In addition, a reduction ratio will be indicated as ∗∗∗, backlash will be indicated as □, and a flange type will be indicated as △.
Note: Please refer to pages 905 to 911 for the detailed dimensions of the input shaft area.
Note: Please refer to page 818 for the performance table.

<Figure 4>

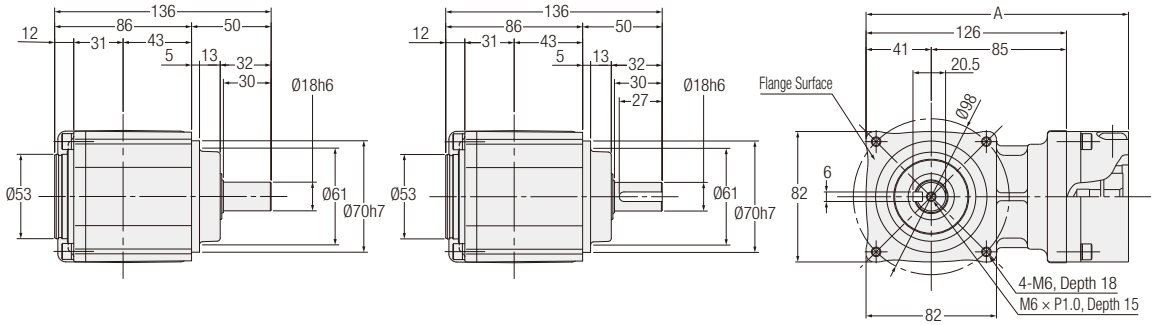

<Figure 5>

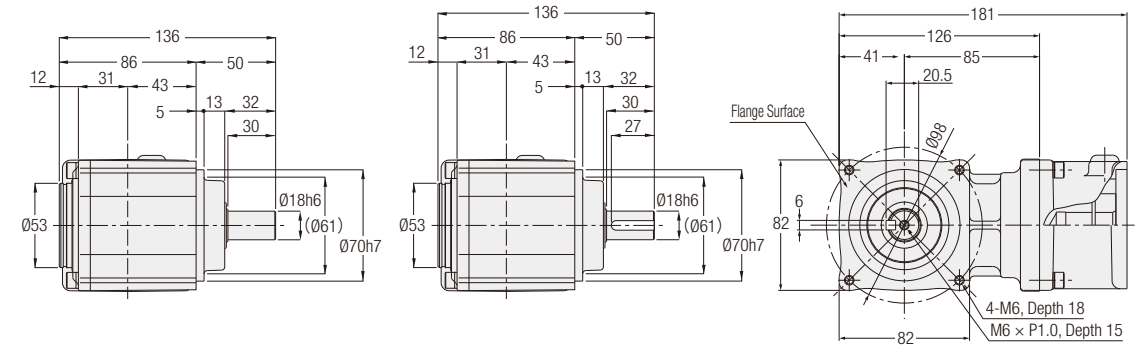

<Figure 6>

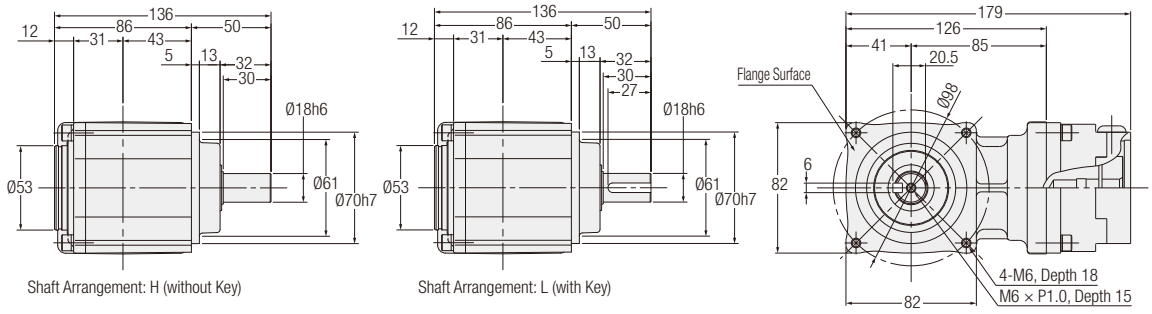

Shaft Arrangement: H (without Key)

Shaft Arrangement: L (with Key)

Motor Power Class	Part Number	Reduction Ratio	Figure Number	Flange Type	Approx. Weight (kg)	A
400 W	AFCZ18#-***□400△	7.5, 10	4	S6	3.3	165
750 W	AFCZ18#-***□750△	3, 5	5	S1/S2/S3/S4/S9	3.3	—
750 W	AFCZ18#-***□750△	3, 5	6	SA	3.3	—

Note: A shaft arrangement (H, L) will be indicated as # in the nomenclature. In addition, a reduction ratio will be indicated as ***, backlash will be indicated as □, and a flange type will be indicated as △.

Note: Please refer to pages 905 to 911 for the detailed dimensions of the input shaft area.

Note: Please refer to page 818 for the performance table.

AFC Type Right Angle Shaft — Shaft Diameter 22 — Backlash 3 arc min/30 arc min

<Figure 1>

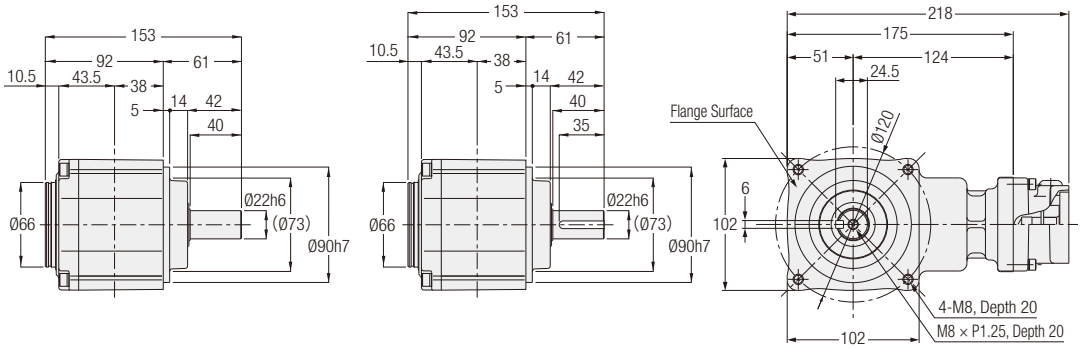

<Figure 2>

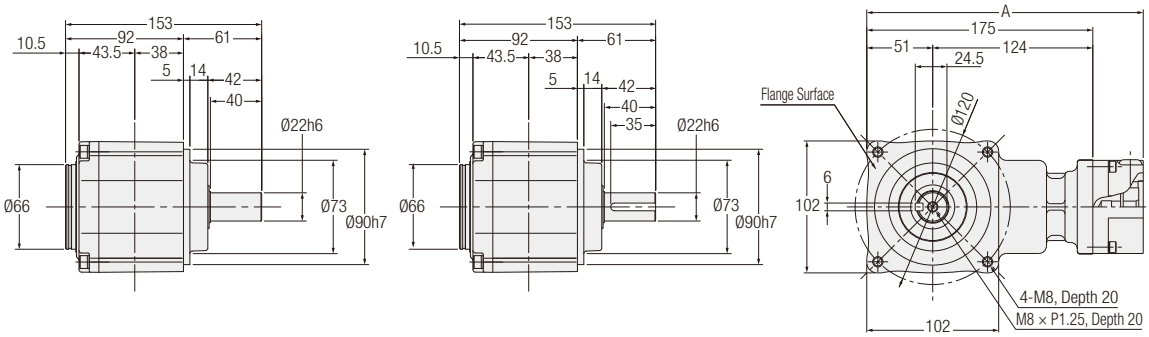

<Figure 3>

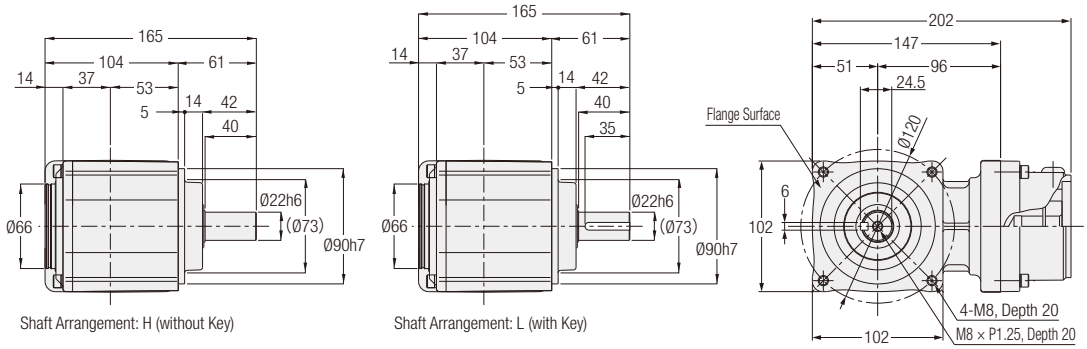

Shaft Arrangement: H (without Key)

Shaft Arrangement: L (with Key)

Motor Power Class	Part Number	Reduction Ratio	Figure Number	Flange Type	Approx. Weight (kg)	A
200 W	AFCZ22#-***□200△	40, 50, 60	1	S1/S2/S3	4.6	—
200 W	AFCZ22#-***□200△	40, 50, 60	2	S6	4.6	214
200 W	AFCZ22#-***□200△	40, 50, 60	2	S7	4.6	217
400 W	AFCZ22#-***□400△	10, 12, 15, 20, 25, 30	1	S1/S3	4.6	—
400 W	AFCZ22#-***□400△	10, 12, 15, 20, 25, 30	2	S6	4.6	214
400 W	AFCZ22#-***□400△	10, 12, 15, 20, 25, 30	2	S7	4.6	217
750 W	AFCZ22#-***□750△	7.5, 10	3	S1/S2/S3/S4/S9	5.7	—

Note: A shaft arrangement (H, L) will be indicated as # in the nomenclature. In addition, a reduction ratio will be indicated as ***, backlash will be indicated as □, and a flange type will be indicated as △.

Note: Please refer to pages 905 to 911 for the detailed dimensions of the input shaft area.
Note: Please refer to page 818 for the performance table.

<Figure 4>

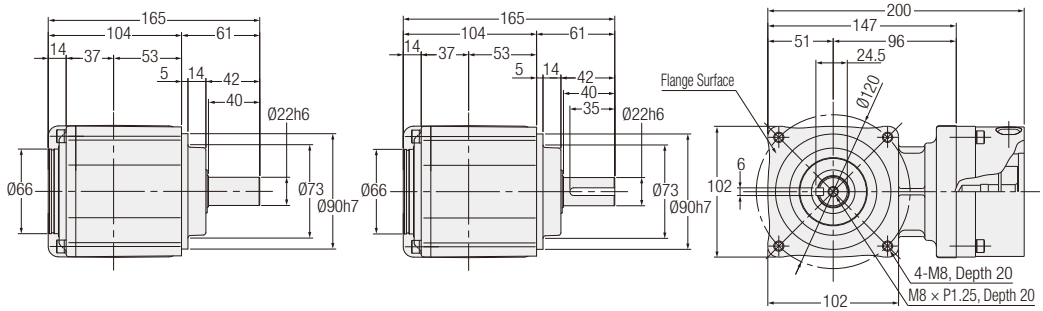

<Figure 5>

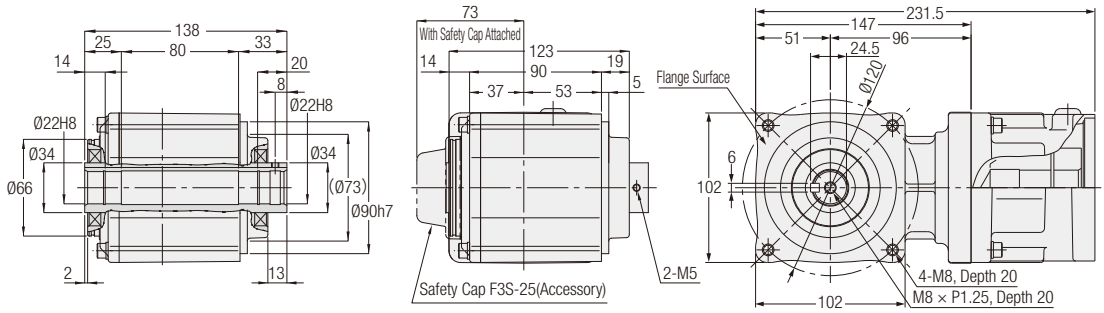

<Figure 6>

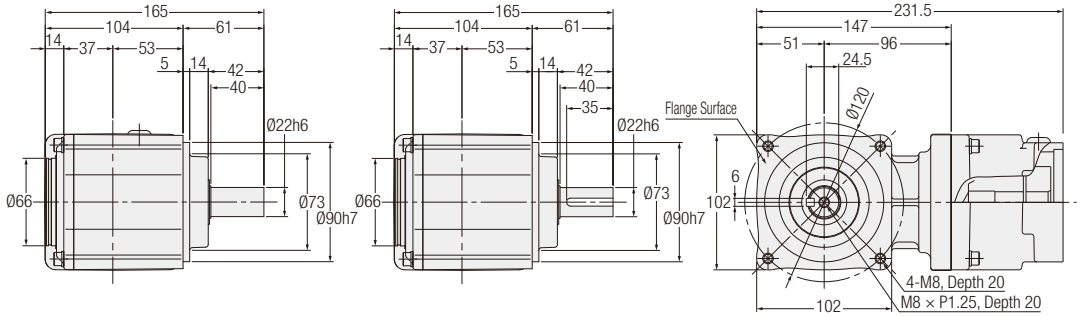

Motor Power Class	Part Number	Reduction Ratio	Figure Number	Flange Type	Approx. Weight (kg)
750 W	AFCZ22#-***□750△	7.5, 10	4	SA	5.7
1000 W	AFCZ22#-***□1000△	3, 5	5	K13/K22/K23/K61	6.5
1000 W	AFCZ22#-***□1000△	3, 5	6	KC9	6.5

Note: A shaft arrangement (H, L) will be indicated as # in the nomenclature. In addition, a reduction ratio will be indicated as ***, backlash will be indicated as □, and a flange type will be indicated as △.
Note: Please refer to pages 905 to 911 for the detailed dimensions of the input shaft area.
Note: Please refer to page 818 for the performance table.

AFC Type Right Angle Shaft — Shaft Diameter 28 — Backlash 3 arc min/30 arc min

<Figure 1>

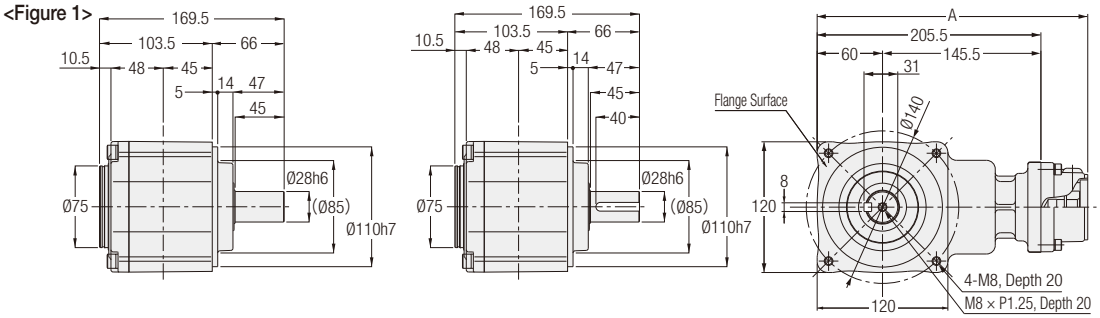

<Figure 2>

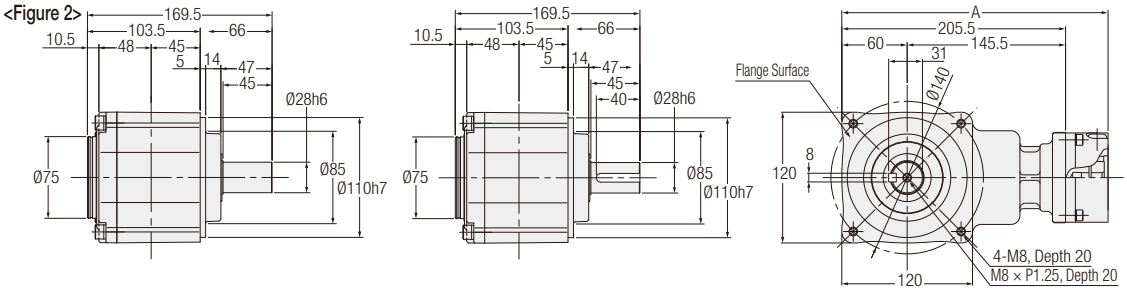

<Figure 3>

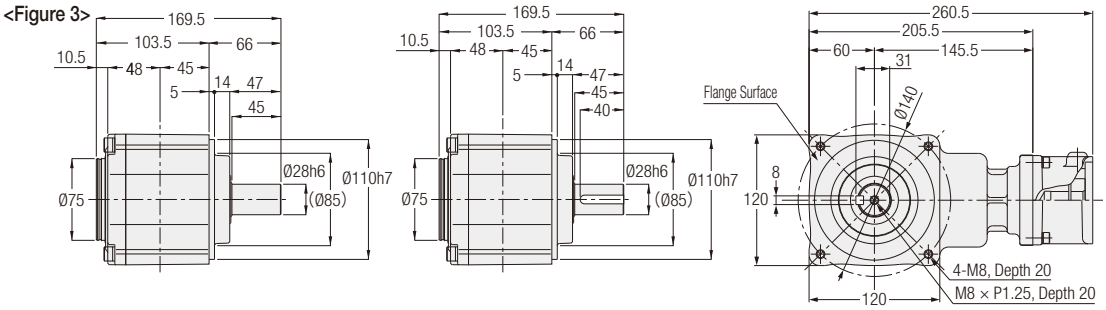

<Figure 4>

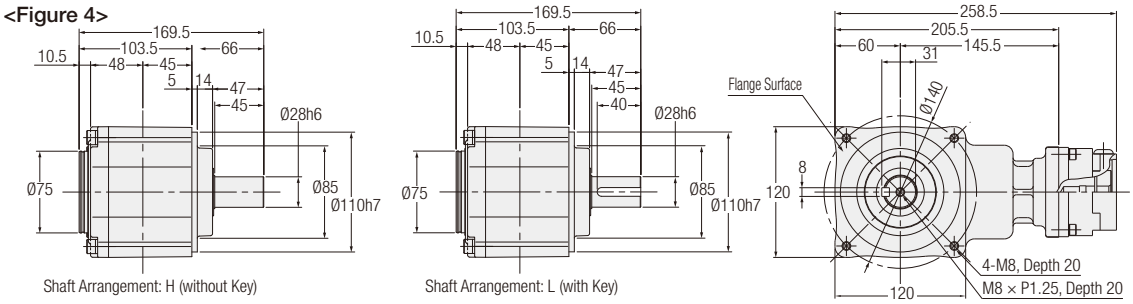

Shaft Arrangement: H (without Key)

Shaft Arrangement: L (with Key)

Motor Power Class	Part Number	Reduction Ratio	Figure Number	Flange Type	Approx. Weight (kg)	A
400 W	AFCZ28#-***□400△	40, 50, 60	1	S1/S3	7.2	248.5
400 W	AFCZ28#-***□400△	40, 50, 60	2	S6	7.2	244.5
400 W	AFCZ28#-***□400△	40, 50, 60	1	S7	7.2	247.5
750 W	AFCZ28#-***□750△	10, 12, 15, 20, 25, 30	3	S1/S2/S3/S4/S9	7.2	—
750 W	AFCZ28#-***□750△	10, 12, 15, 20, 25, 30	4	SA	7.2	—

Note: A shaft arrangement (H, L) will be indicated as # in the nomenclature. In addition, a reduction ratio will be indicated as ***, backlash will be indicated as □, and a flange type will be indicated as △.

Note: Please refer to pages 905 to 911 for the detailed dimensions of the input shaft area.
Note: Please refer to page 818 for the performance table.

The values in parentheses ( ) are the indications for flange type K75.

<Figure 5>

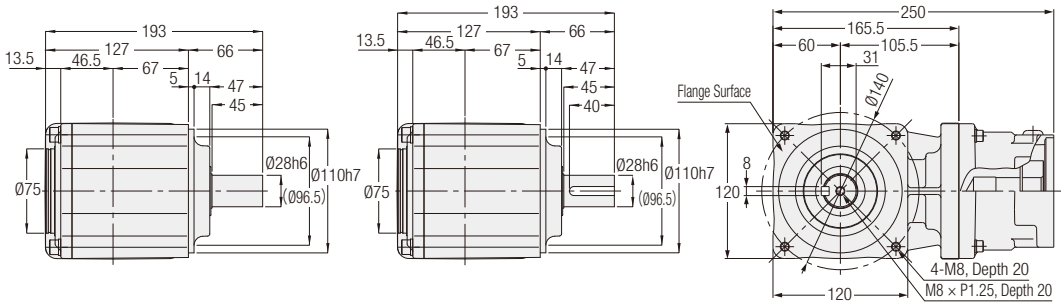

<Figure 6>

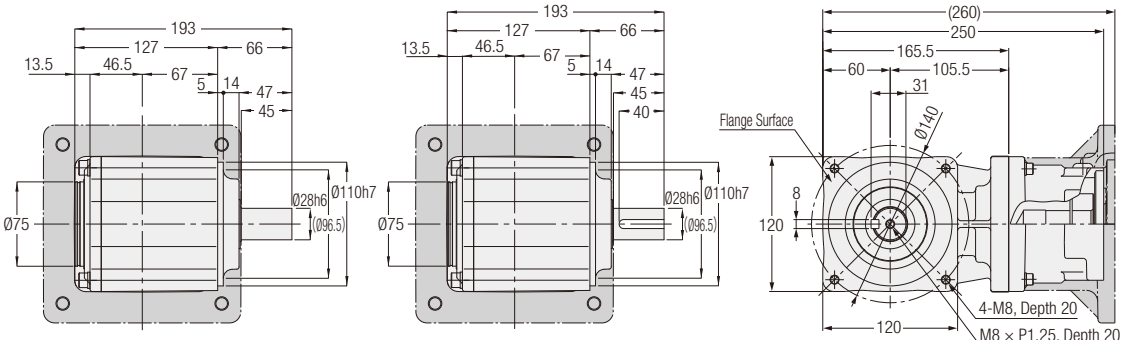

Shaft Arrangement: H (without Key)　　Shaft Arrangement: L (with Key)

Motor Power Class	Part Number	Reduction Ratio	Figure Number	Flange Type	Approx. Weight (kg)
1000 W	AFCZ28#-∗∗∗□1000△	7.5, 10	5	K13/K22/K23/K61/KC9	9.5
2000 W	AFCZ28#-∗∗∗□2000△	3, 5	6	K13/K21/K22/K23/K31/K32/K33/K41	9.5
2000 W	AFCZ28#-∗∗∗□2000△	3, 5	6	K75	10.5

Note: A shaft arrangement (H, L) will be indicated as # in the nomenclature. In addition, a reduction ratio will be indicated as ∗∗∗, backlash will be indicated as □, and a flange type will be indicated as △.
Note: Please refer to pages 905 to 911 for the detailed dimensions of the input shaft area.
Note: The drawings shown in the dark color are outline drawings of flange type K75.
Note: Please refer to page 818 for the performance table.

AFC Type Right Angle Shaft — Shaft Diameter 32 — Backlash 3 arc min/30 arc min

The values in parentheses ( ) are the indications for flange type K75.

<Figure 1>

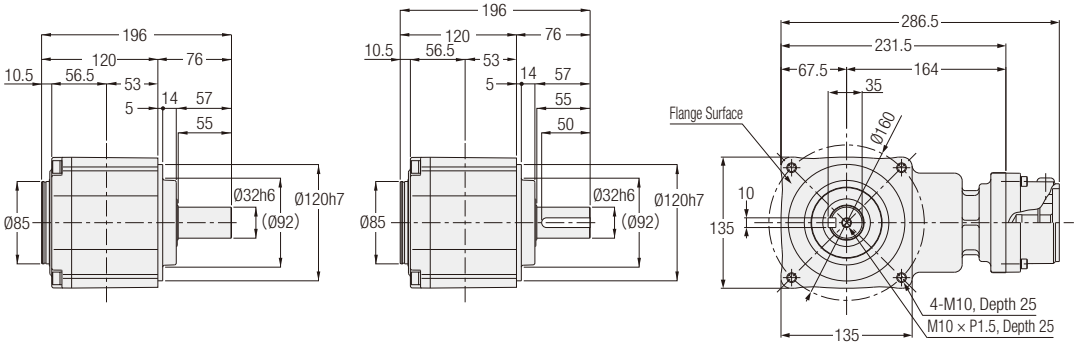

<Figure 2>

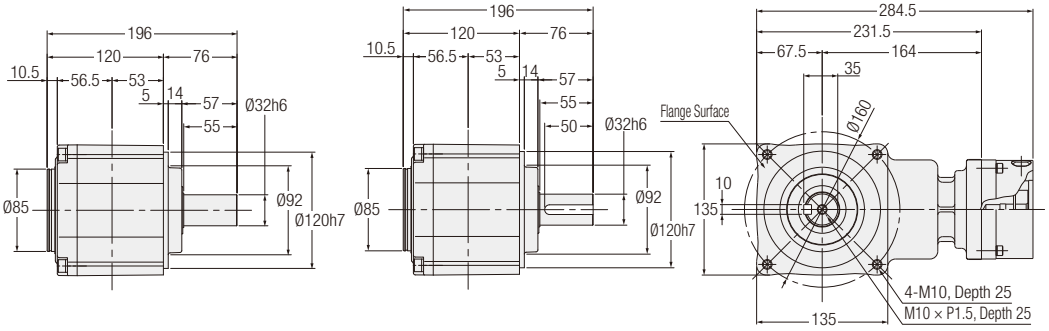

<Figure 3>

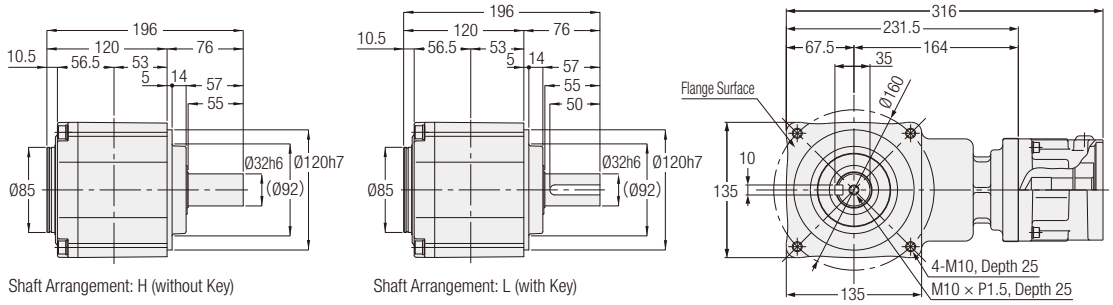

Shaft Arrangement: H (without Key)

Shaft Arrangement: L (with Key)

Motor Power Class	Part Number	Reduction Ratio	Figure Number	Flange Type	Approx. Weight (kg)
750 W	AFCZ32#-***□750△	40, 50, 60	1	S1/S2/S3/S4/S9	11
750 W	AFCZ32#-***□750△	40, 50, 60	2	SA	11
1000 W	AFCZ32#-***□1000△	10, 12, 15, 20, 25, 30	3	K13/K22/K23/K61	11.5

Note: A shaft arrangement (H, L) will be indicated as # in the nomenclature. In addition, a reduction ratio will be indicated as ***, backlash will be indicated as □, and a flange type will be indicated as △.
Note: Please refer to pages 905 to 911 for the detailed dimensions of the input shaft area.
Note: The drawings shown in the dark color are outline drawings of flange type K75.
Note: Please refer to page 818 for the performance table.

<Figure 4>

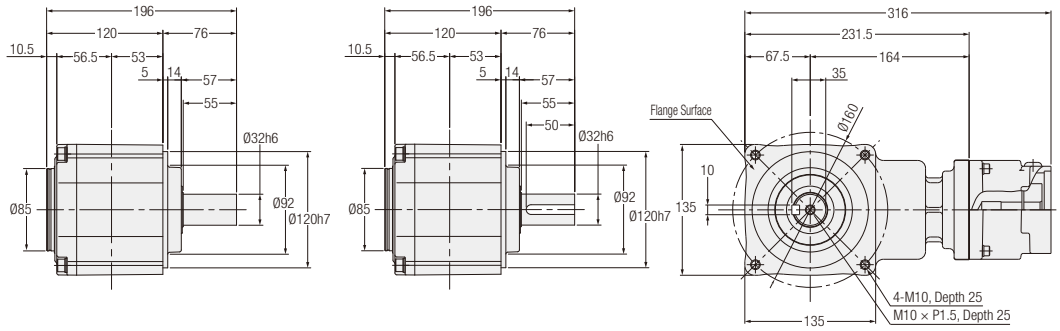

<Figure 5>

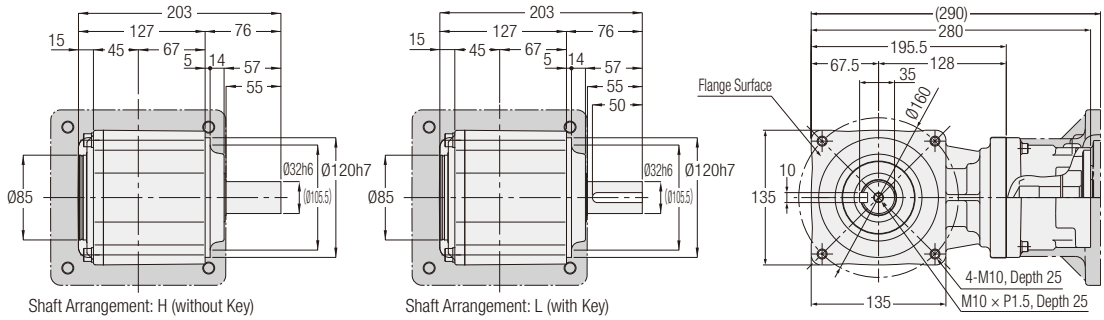

Shaft Arrangement: H (without Key)

Shaft Arrangement: L (with Key)

Motor Power Class	Part Number	Reduction Ratio	Figure Number	Flange Type	Approx. Weight (kg)
1000 W	AFCZ32#-∗∗∗□1000△	10, 12, 15, 20, 25, 30	4	KC9	11.5
2000 W	AFCZ32#-∗∗∗□2000△	7.5, 10	5	K13/K21/K22/K23/K31/K32/K33/K41	12
2000 W	AFCZ32#-∗∗∗□2000△	7.5, 10	5	K75	13
3000 W	AFCZ32#-∗∗∗□3000△	3, 5	5	K13/K21/K22/K23/K32/K33/K34/K52/KBC	12
3000 W	AFCZ32#-∗∗∗□3000△	3, 5	5	K75	13

Note: A shaft arrangement (H, L) will be indicated as # in the nomenclature. In addition, a reduction ratio will be indicated as ∗∗∗, backlash will be indicated as □, and a flange type will be indicated as △.
Note: Please refer to pages 905 to 911 for the detailed dimensions of the input shaft area.
Note: The drawings shown in the dark color are outline drawings of flange type K75.
Note: Please refer to page 818 for the performance table.

1-3. Low Temperature Startup Characteristics (No Load Running Torque (Input Shaft))

No load running torque means the input shaft torque required to run the gearbox at the rated input speed (3000 r/min) under no load state.

When the gearbox is used at low temperature, the no load running torque at a startup will increase.
When the operation is continued, the no load running torque will decrease with the temperature rise of the gearbox.
The rate of decrease differs depending on the model and the usage environment.
The figure below shows a representative value in a state where a warm-up operation is not performed.

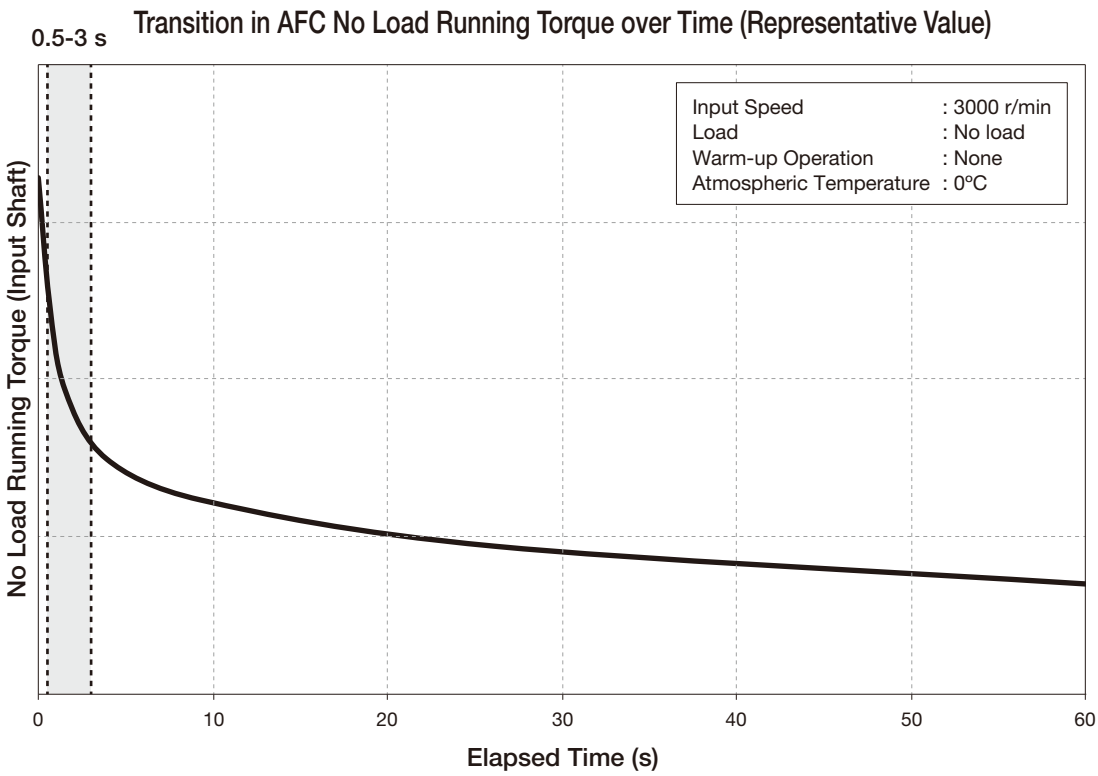

The figures on the pages that follow show the average value of the no load running torque of each type between 0.5 and 3 seconds.

1-3. Low Temperature Startup Characteristics

Input Speed: 3000 r/min
No Load Running Torque (Input Shaft): Average value between 0.5 and 3 seconds
Each figure shows a representative value in a state where a warm-up operation is not performed.

Frame Size 10 (100 W)

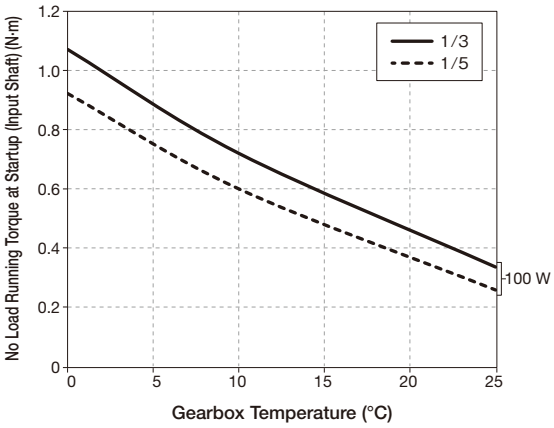

Frame Size 12 (100 W/200 W)

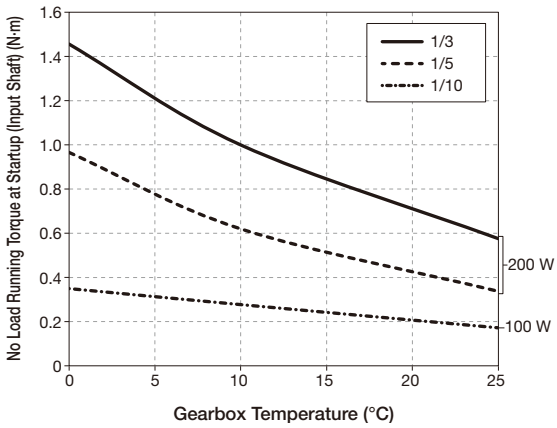

Frame Size 15 (100 W)

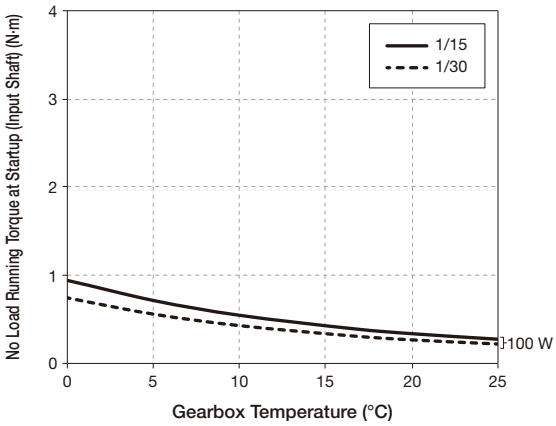

Frame Size 15 (200 W/400 W)

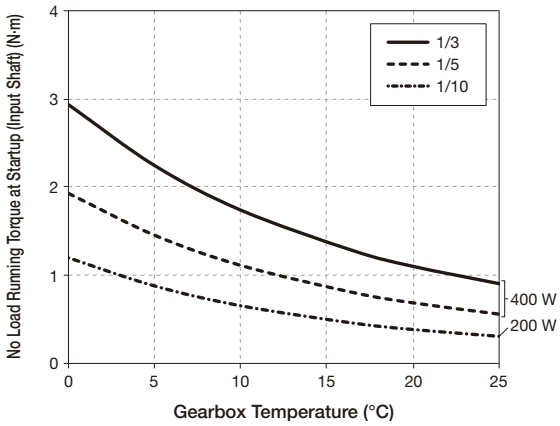

Frame Size 18 (100 W/200 W)

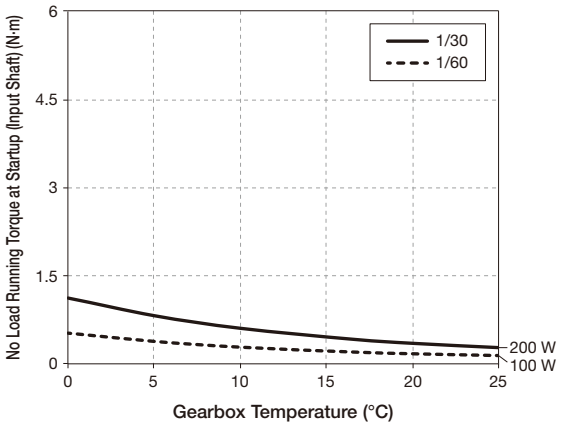

Frame Size 18 (400 W/750 W)

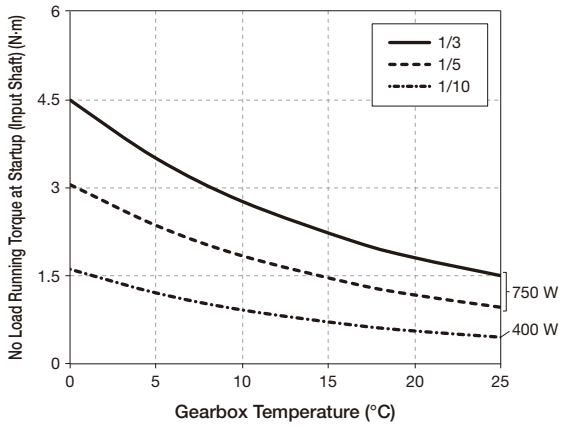

Frame Size 22 (200 W/400 W)

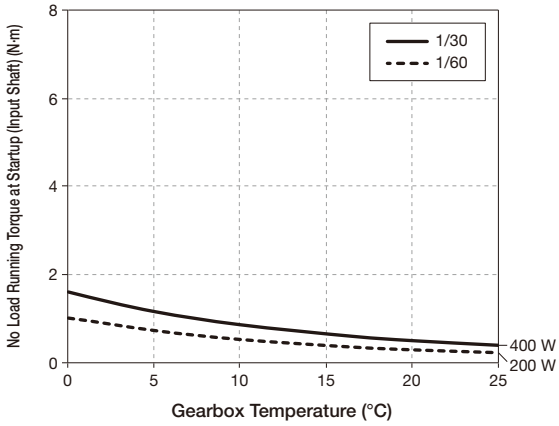

Frame Size 22 (750 W/1000 W)

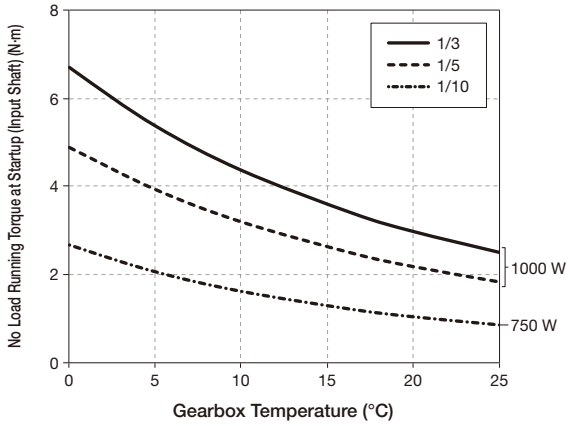

Frame Size 28 (400 W/750 W)

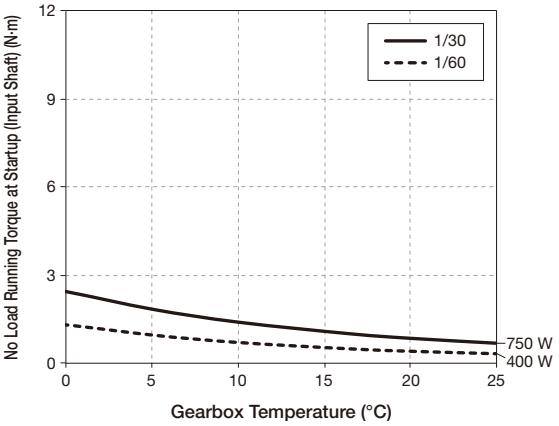

Frame Size 28 (1000 W/2000 W)

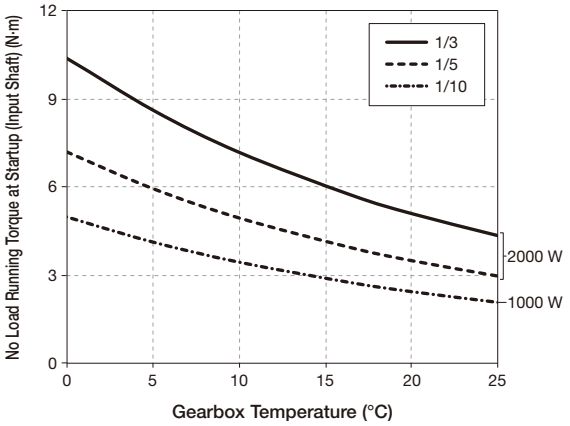

Frame Size 32 (750 W/1000 W)

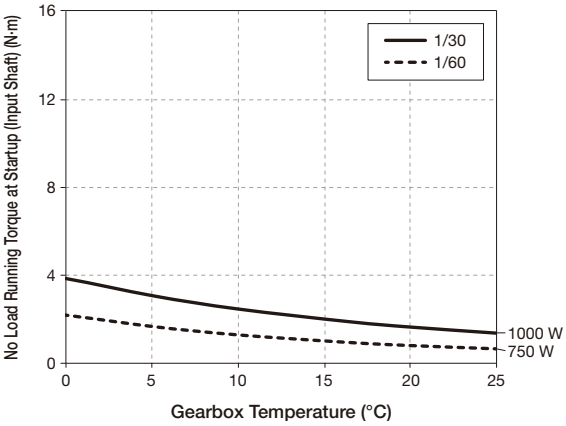

Frame Size 32 (2000 W/3000 W)

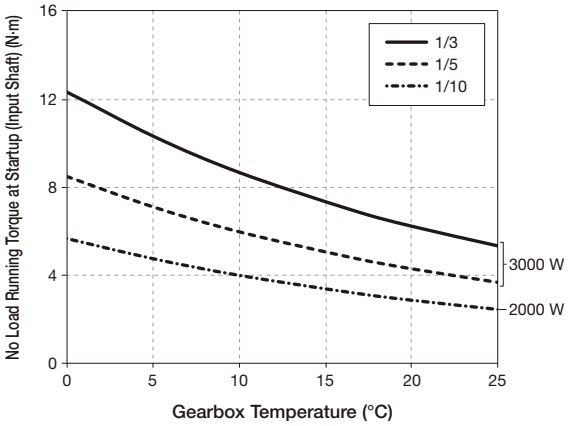

AF3 Type

Concentric Right Angle Hollow Bore/ Concentric Right Angle Shaft

Model and Type Codes

Standard Model Lineup

P.852

P.866

HIGH PRECISION GEARBOXES FOR SERVO MOTORS

1. High Precision Gearboxes for Servo Motors Backlash 1 arc min/3 arc min Specifications

1-1. Performance Tables

1-2. Drawings

2. Low Backlash High Precision Gearboxes for Servo Motors

2-1. Performance Tables

2-2. Drawings

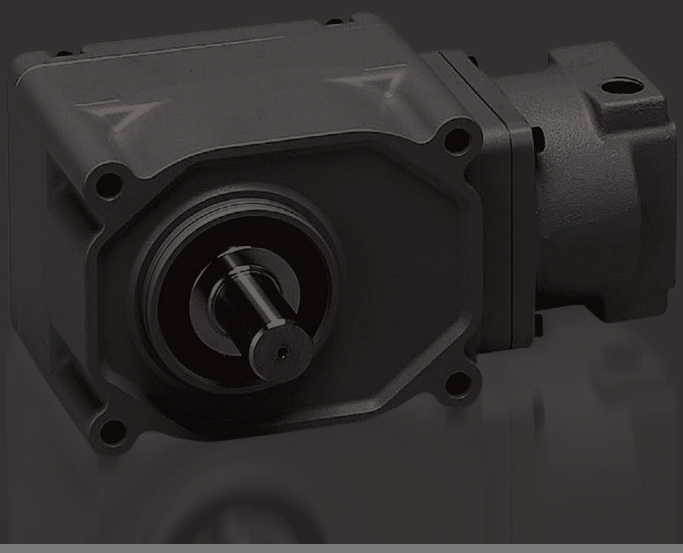

Model and Type Codes

AF3 Type

Mounting Type	Motor Type	Frame Size	Shaft Arrangement		Reduction Ratio	Backlash	Motor Power Class	Type	Option	Option Code
AF3S	Z	25		–	30	H	200	S1		
AF3S	Z	30		–	30	M	400	F3		
AF3F	Z	40	R	–	60	L	2000	K21	X	B3
①	②	③	④		⑤	⑥	⑦	⑧	⑨	⑩

①Mounting Type	AF3S : Concentric Right Angle Hollow Bore				
	AF3F : Concentric Right Angle Shaft				
②Motor Type	Z : High Precision Gearboxes for Servo Motor (Z Type Gearbox)				
③Frame Size and Output Shaft Diameter	Output Shaft Diameter				
④Shaft Arrangement	Concentric Right Angle Hollow Bore	Blank			
	Concentric Right Angle Shaft	1 arc min and 3 arc min specifications	Output shaft on the left side when viewed from the input shaft side 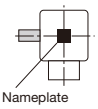	Output shaft on the right side when viewed from the input shaft side 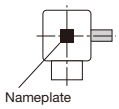	Output shaft on both sides when viewed from the input shaft side 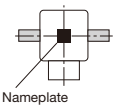
			H	M	F
		Low Backlash	Output shaft on the left side when viewed from the input shaft side 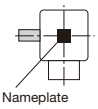	Output shaft on the right side when viewed from the input shaft side 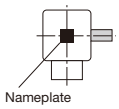	Output shaft on both sides when viewed from the input shaft side 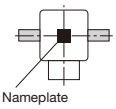
			L	R	T
⑤Reduction Ratio	5:1/5 to 240:1/240				
⑥Backlash	H : Backlash 1 arc min				
	M : Backlash 3 arc min				
	L : Backlash 30 arc min (excluding some models)				
⑦Motor Power Class	100 : 100 W Class				
	200 : 200 W Class				
	400 : 400 W Class				
	750 : 750 W Class				
	1000 : 1000 W Class (only 1 arc min and 3 arc min specifications)				
	2000 : 2000 W Class				
⑧Flange Type for Servo Motor Mounting	F1, S1, K31, etc.				
⑨Option	Blank : Standard Specification				
	X : Special Specification Code				
⑩Option Code (Note 1)	Position Code of Wrench Hole for Input Shaft Joint Tightening For details, please refer to the list of option codes on page 949.				

Note 1: The option code will not be shown in the nomenclature on the nameplate. But it will be shown in the Option code row of the nameplate.

Standard Model Lineup

AF3 Type <AF3S> Backlash 1 arc min/3 arc min Specifications

Motor Power Class	Frame Size	Reduction Ratio	Backlash
100 W	15	1/10, 1/15, 1/20, 1/25, 1/30, 1/40, 1/50, 1/60, 1/75, 1/90, 1/120	H (1 arc min), M (3 arc min)
200 W	25	1/10, 1/15, 1/20, 1/25, 1/30, 1/40, 1/50, 1/60	H (1 arc min), M (3 arc min)
	30	1/75, 1/90, 1/120, 1/150, 1/180	M (3 arc min)
400 W	30	1/10, 1/15, 1/20, 1/25, 1/30, 1/40, 1/50, 1/60	H (1 arc min), M (3 arc min)
	35	1/75, 1/90, 1/120, 1/150, 1/180	M (3 arc min)
750 W	35	1/10, 1/15, 1/20, 1/25, 1/30, 1/40, 1/50, 1/60	H (1 arc min), M (3 arc min)
	45	1/75, 1/90, 1/120, 1/150, 1/180	M (3 arc min)
1000 W	35	1/10, 1/20, 1/30, 1/40, 1/50, 1/60	H (1 arc min), M (3 arc min)
2000 W	45	1/10, 1/20, 1/30, 1/40, 1/50, 1/60	H (1 arc min), M (3 arc min)

Note 1: ▭ indicates a limited torque type. Please make sure to check the allowable torque in the performance table.
Note 2: For the model lineup of low backlash types (precision: 30 arc min or more), refer to page 849.
Note 3: The details of output and other specifications are different between products with precision codes H and M (backlash: 1 arc min and 3 arc min) and products with precision code L (low backlash type). Please check them on drawings.

AF3 Type <AF3F> Backlash 1 arc min/3 arc min Specifications

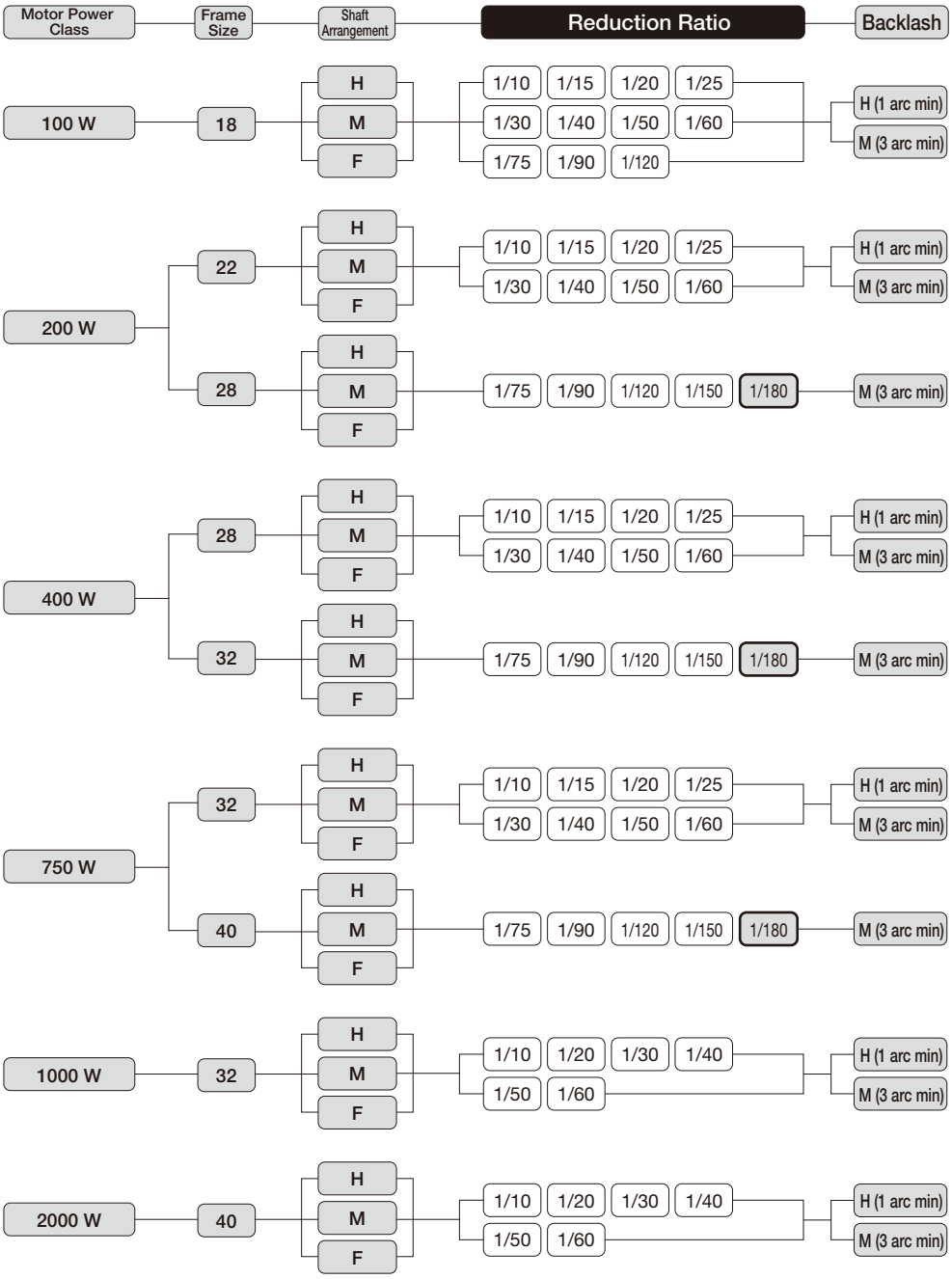

Note 1: ▭ indicates a limited torque type. Please make sure to check the allowable torque in the performance table.
Note 2: For the model lineup of low backlash types (precision: 30 arc min or more), refer to page 850.
Note 3: The details of output and other specifications are different between products with precision codes H and M (backlash: 1 arc min and 3 arc min) and products with precision code L (low backlash type). Please check them on drawings.

AF3 Type <AF3S> Low Backlash Specification

Motor Power Class	Frame Size	Reduction Ratio	Backlash
100 W	20	1/10, 1/15, 1/20, 1/25, 1/30, 1/40, 1/50, 1/60	L (Low Backlash)
	25	1/80, 1/100, 1/120, 1/160, 1/200, 1/240	
200 W	25	1/10, 1/15, 1/20, 1/25, 1/30, 1/40, 1/50, 1/60	L (Low Backlash)
	30	1/80, 1/100, 1/120, 1/160, 1/200, 1/240	
400 W	30	1/5, 1/7.5, 1/10, 1/12, 1/15, 1/20, 1/25, 1/30, 1/40, 1/50, 1/60	L (Low Backlash)
	35	1/80, 1/100, 1/120, 1/160, 1/200, 1/240	
750 W	35	1/5, 1/7.5, 1/10, 1/12, 1/15, 1/20, 1/25, 1/30, 1/40, 1/50, 1/60	L (Low Backlash)
	45	1/80, 1/100, 1/120, 1/160, 1/200, 1/240	
2000 W	45	1/5, 1/7.5, 1/10, 1/12, 1/15, 1/20, 1/25, 1/30, 1/40, 1/50, 1/60	L (Low Backlash)

Note 1: For the precision of low backlash types, refer to the performance table.
Note 2: For the model lineup of gearboxes with 1 arc min and 3 arc min specifications, refer to page 847.
Note 3: The details of output and other specifications are different between products with precision codes H and M (backlash: 1 arc min and 3 arc min) and products with precision code L (low backlash type). Please check them on drawings.

AF3 Type <AF3F> Low Backlash Specification

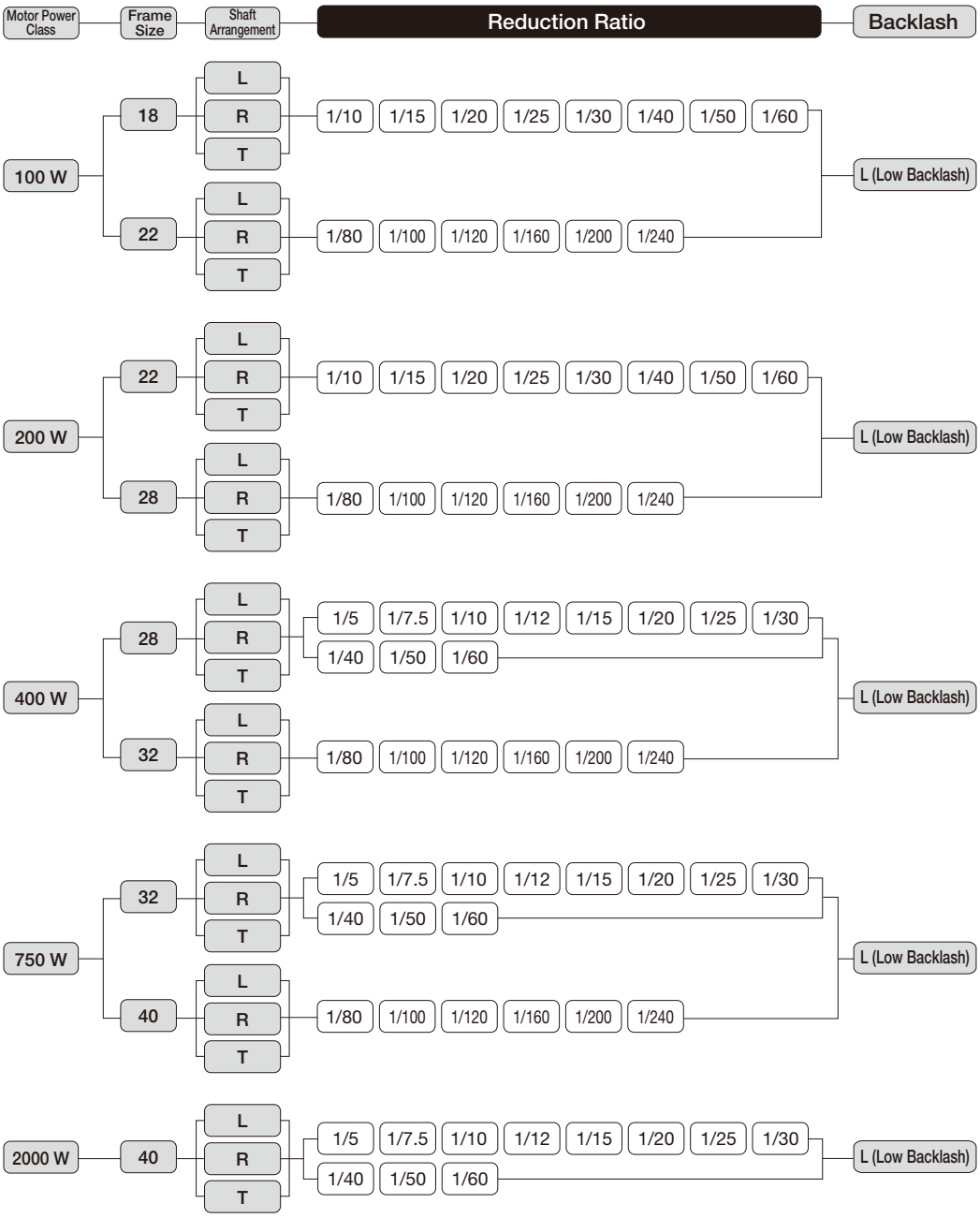

Note 1: For the precision of low backlash types, refer to the performance table.
Note 2: For the model lineup of gearboxes with 1 arc min and 3 arc min specifications, refer to page 848.
Note 3: The details of output and other specifications are different between products with precision codes H and M (backlash: 1 arc min and 3 arc min) and products with precision code L (low backlash type). Please check them on drawings.

MEMO

1. High Precision Gearboxes for Servo Motors Backlash 1 arc min/3 arc min Specifications

1-1. Performance Tables

AF3S Type <Backlash 1 arc min/3 arc min Specifications> Performance Table by Reduction Ratio

[Notes]

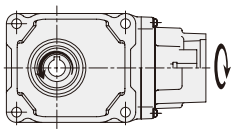

- The input speed is 3000 r/min.
- The "*" mark indicates a limited torque type. Please make sure to check the allowable average torque in the performance table.
- Allowable output shaft O.H.L. is the value at 20 mm from the flange surface.
- For the continuous rated input torque, please refer to page 948. In addition, for the servo motor-based motor rated output torque, please refer to page 931.
- The key dimensions and tolerances for output shafts conform to JIS B 1301-1996 (plain form).
- The key for the output shaft is not supplied with backlash 1 arc min and 3 arc min specifications and concentric right angle hollow bore types.
- The internal moment of inertia (input shaft equivalent) is the value for the gearbox alone, and does not include the motor's moment of inertia.
- The allowable average torque is the continuous allowable torque value.
- Adjust the gain so that the inertial load on the output shaft side does not vibrate during acceleration and deceleration.
- In the performance table, ▭ indicates that for a clockwise (CW) motor input, the output rotates clockwise (CW) as viewed from the output shaft under the conditions shown in the figure on the right. (The arrows indicate the rotational directions of the input and output shafts, and do not limit the actual direction of rotation.)
- H in the Precision column means backlash 1 arc min, and M means backlash 3 arc min.

■ At an input speed of 3000 r/min

Mounting Type	Output Shaft Diameter	Shaft Arrangement	Nominal Reduction Ratio	Actual Reduction Ratio	Precision	Power Class	Allowable Average Torque (3000 r/min)	Allowable Peak Torque of Startup/ Stop	Allowable Output Shaft O.H.L.	Allowable Output Shaft Thrust Load	Internal Moment of Inertia (Input Shaft Equivalent)	Drawings
							N·m	N·m	N	N	$\times10^{-4}$kg·m^2	
AF3SZ	15	—	1/10	1/10	H/M	100	2.2	6.5	340	108	0.373	P.856
AF3SZ	25	—	1/10	1/10	H/M	200	3.8	11	1230	380	0.721	
AF3SZ	30	—	1/10	1/10	H/M	400	7.8	23	1520	475	0.799	P.857
AF3SZ	35	—	1/10	1/10	H/M	750	16	48	1960	613	1.547	P.858
AF3SZ	35	—	1/10	1/10	H/M	1000	22	44	1960	613	4.737	
AF3SZ	45	—	1/10	1/10	H/M	2000	44	88	3140	967	6.339	P.859
AF3SZ	15	—	1/15	1/15	H/M	100	3.5	10	440	147	0.371	P.856
AF3SZ	25	—	1/15	1/15	H/M	200	6.4	19	1370	429	0.706	
AF3SZ	30	—	1/15	1/15	H/M	400	13	40	1720	539	0.774	P.857
AF3SZ	35	—	1/15	1/15	H/M	750	26	79	2250	686	1.501	P.858
AF3SZ	15	—	1/20	1/20	H/M	100	5.0	15	540	186	0.370	P.856
AF3SZ	25	—	1/20	1/20	H/M	200	8.9	27	1520	466	0.700	
AF3SZ	30	—	1/20	1/20	H/M	400	18	53	2010	600	0.764	P.857
AF3SZ	35	—	1/20	1/20	H/M	750	36	109	2500	747	1.482	P.858
AF3SZ	35	—	1/20	1/20	H/M	1000	45	90	2500	747	4.641	
AF3SZ	45	—	1/20	1/20	H/M	2000	90	179	4070	1067	6.049	P.859
AF3SZ	15	—	1/25	1/25	H/M	100	6.4	19	640	226	0.369	P.856
AF3SZ	25	—	1/25	1/25	H/M	200	12	35	1670	502	0.697	
AF3SZ	30	—	1/25	1/25	H/M	400	23	68	2160	637	0.759	P.857
AF3SZ	35	—	1/25	1/25	H/M	750	46	137	2740	796	1.469	P.858
AF3SZ	15	—	1/30	1/30	H/M	100	7.6	23	740	245	0.369	P.856
AF3SZ	25	—	1/30	1/30	H/M	200	14	43	1810	527	0.695	
AF3SZ	30	—	1/30	1/30	H/M	400	27	82	2300	662	0.754	P.857
AF3SZ	35	—	1/30	1/30	H/M	750	55	166	2940	821	1.462	P.858
AF3SZ	35	—	1/30	1/30	H/M	1000	67	134	2940	821	4.616	
AF3SZ	45	—	1/30	1/30	H/M	2000	144	288	4360	1067	5.972	P.859
AF3SZ	15	—	1/40	1/40	H/M	100	10	25	780	275	0.368	P.856
AF3SZ	25	—	1/40	1/40	H/M	200	19	48	1960	576	0.693	
AF3SZ	30	—	1/40	1/40	H/M	400	36	91	2600	711	0.750	P.857
AF3SZ	35	—	1/40	1/40	H/M	750	76	191	3140	870	1.453	P.858
AF3SZ	35	—	1/40	1/40	H/M	1000	96	192	3140	870	4.606	
AF3SZ	45	—	1/40	1/40	H/M	2000	191	382	4360	1067	5.934	P.859

1-1. Performance Tables

Mounting Type	Output Shaft Diameter	Shaft Arrangement	Nominal Reduction Ratio	Actual Reduction Ratio	Precision	Power Class	Allowable Average Torque (3000 r/min)	Allowable Peak Torque of Startup/ Stop	Allowable Output Shaft O.H.L.	Allowable Output Shaft Thrust Load	Internal Moment of Inertia (Input Shaft Equivalent)	Drawings
							N·m	N·m	N	N	$\times 10^{-4}$kg·m^2	
AF3SZ	15	—	1/50	1/50	H/M	100	13	31	880	294	0.368	P.856
AF3SZ	25	—	1/50	1/50	H/M	200	24	48	2160	613	0.691	
AF3SZ	30	—	1/50	1/50	H/M	400	45	91	2840	747	0.747	P.857
AF3SZ	35	—	1/50	1/50	H/M	750	95	191	3280	870	1.448	P.858
AF3SZ	35	—	1/50	1/50	H/M	1000	120	239	3280	870	4.597	
AF3SZ	45	—	1/50	1/50	H/M	2000	239	473	4360	1067	5.913	P.859
AF3SZ	15	—	1/60	1/60	H/M	100	15	31	880	294	0.367	P.856
AF3SZ	25	—	1/60	1/60	H/M	200	29	57	2350	637	0.690	
AF3SZ	30	—	1/60	1/60	H/M	400	54	109	3040	767	0.746	P.857
AF3SZ	35	—	1/60	1/60	H/M	750	115	229	3430	870	1.444	P.858
AF3SZ	35	—	1/60	1/60	H/M	1000	143	286	3430	870	4.596	
AF3SZ	45	—	1/60	1/60	H/M	2000	287	574	4360	1067	5.899	P.859
AF3SZ	15	—	1/75	1/75	H/M	100	18	36	980	324	0.368	P.856
AF3SZ	30	—	1/75	1/75	M	200	31	62	3090	775	0.692	P.857
AF3SZ	35	—	1/75	1/75	M	400	63	127	3330	873	0.747	P.858
AF3SZ	45	—	1/75	1/75	M	750	135	271	4460	1177	1.452	P.859
AF3SZ	15	—	1/90	1/90	H/M	100	22	44	1030	324	0.368	P.856
AF3SZ	30	—	1/90	1/90	M	200	37	74	3090	775	0.692	P.857
AF3SZ	35	—	1/90	1/90	M	400	75	150	3380	873	0.747	P.858
AF3SZ	45	—	1/90	1/90	M	750	162	325	4460	1177	1.452	P.859
AF3SZ	15	—	1/120	1/120	H/M	100	29	58	1030	343	0.367	P.856
AF3SZ	30	—	1/120	1/120	M	200	50	99	3140	785	0.692	P.857
AF3SZ	35	—	1/120	1/120	M	400	100	200	3380	883	0.746	P.858
AF3SZ	45	—	1/120	1/120	M	750	217	433	4460	1177	1.449	P.859
AF3SZ	30	—	1/150	1/150	M	200	57	86	3140	785	0.692	P.857
AF3SZ	35	—	1/150	1/150	M	400	124	186	3380	883	0.746	P.858
AF3SZ	45	—	1/150	1/150	M	750	251	377	4460	1177	1.447	P.859
AF3SZ	30	—	1/180	1/180	M	200	* 57	86	3140	785	0.691	P.857
AF3SZ	35	—	1/180	1/180	M	400	* 124	186	3580	912	0.745	P.858
AF3SZ	45	—	1/180	1/180	M	750	* 251	377	4850	1275	1.445	P.859

AF3F Type <Backlash 1 arc min/3 arc min Specifications> Performance Table by Reduction Ratio

[Notes]

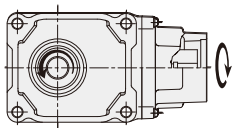

- The input speed is 3000 r/min.
- The "*" mark indicates a limited torque type. Please make sure to check the allowable average torque in the performance table.
- Allowable output shaft O.H.L. is the value at the middle of the output shaft.
- For the continuous rated input torque, please refer to page 948. In addition, for the servo motor-based motor rated output torque, please refer to page 933.
- The key dimensions and tolerances for output shafts conform to JIS B 1301-1996 (plain form).
- The key for the output shaft is not supplied with backlash 1 arc min and 3 arc min specifications and concentric right angle hollow bore types.
- The internal moment of inertia (input shaft equivalent) is the value for the gearbox alone, and does not include the motor's moment of inertia.
- The allowable average torque is the continuous allowable torque value.
- Adjust the gain so that the inertial load on the output shaft side does not vibrate during acceleration and deceleration.
- In the performance table, ▭ indicates that for a clockwise (CW) motor input, the output rotates clockwise (CW) as viewed from the output shaft under the conditions shown in the figure on the right. (The arrows indicate the rotational directions of the input and output shafts, and do not limit the actual direction of rotation.)
- H in the Precision column means backlash 1 arc min, and M means backlash 3 arc min.

■ At an input speed of 3000 r/min

Mounting Type	Output Shaft Diameter	Shaft Arrangement	Nominal Reduction Ratio	Actual Reduction Ratio	Precision	Power Class	Allowable Average Torque (3000 r/min)	Allowable Peak Torque of Startup/ Stop	Allowable Output Shaft O.H.L.	Allowable Output Shaft Thrust Load	Internal Moment of Inertia (Input Shaft Equivalent)	Drawings
							N·m	N·m	N	N	$\times10^{-4}$kg·m^2	
AF3FZ	18	H/M/F	1/10	1/10	H/M	100	2.2	6.5	340	108	0.373	P.860
AF3FZ	22	H/M/F	1/10	1/10	H/M	200	3.8	11	1230	380	0.721	
AF3FZ	28	H/M/F	1/10	1/10	H/M	400	7.8	23	1520	475	0.799	P.861
AF3FZ	32	H/M/F	1/10	1/10	H/M	750	16	48	1960	613	1.547	P.862/ P.863
AF3FZ	32	H/M/F	1/10	1/10	H/M	1000	22	44	1960	613	4.737	
AF3FZ	40	H/M/F	1/10	1/10	H/M	2000	44	88	3140	967	6.339	P.864
AF3FZ	18	H/M/F	1/15	1/15	H/M	100	3.5	10	440	147	0.371	P.860
AF3FZ	22	H/M/F	1/15	1/15	H/M	200	6.4	19	1370	429	0.706	
AF3FZ	28	H/M/F	1/15	1/15	H/M	400	13	40	1720	539	0.774	P.861
AF3FZ	32	H/M/F	1/15	1/15	H/M	750	26	79	2210	686	1.501	P.862/P.863
AF3FZ	18	H/M/F	1/20	1/20	H/M	100	5.0	15	540	186	0.370	P.860
AF3FZ	22	H/M/F	1/20	1/20	H/M	200	8.9	27	1470	466	0.700	
AF3FZ	28	H/M/F	1/20	1/20	H/M	400	18	53	1860	600	0.764	P.861
AF3FZ	32	H/M/F	1/20	1/20	H/M	750	36	109	2350	747	1.482	P.863
AF3FZ	32	H/M/F	1/20	1/20	H/M	1000	45	90	2350	747	4.641	
AF3FZ	40	H/M/F	1/20	1/20	H/M	2000	90	179	4070	1067	6.049	P.864
AF3FZ	18	H/M/F	1/25	1/25	H/M	100	6.4	19	640	226	0.369	P.860
AF3FZ	22	H/M/F	1/25	1/25	H/M	200	12	35	1620	502	0.697	
AF3FZ	28	H/M/F	1/25	1/25	H/M	400	23	68	2010	637	0.759	P.861
AF3FZ	32	H/M/F	1/25	1/25	H/M	750	46	137	2500	796	1.469	P.862/P.863
AF3FZ	18	H/M/F	1/30	1/30	H/M	100	7.6	23	740	245	0.369	P.860
AF3FZ	22	H/M/F	1/30	1/30	H/M	200	14	43	1720	527	0.695	P.861
AF3FZ	28	H/M/F	1/30	1/30	H/M	400	27	82	2210	662	0.754	P.862/P.863
AF3FZ	32	H/M/F	1/30	1/30	H/M	750	55	166	2650	821	1.462	P.863
AF3FZ	32	H/M/F	1/30	1/30	H/M	1000	67	134	2650	821	4.616	
AF3FZ	40	H/M/F	1/30	1/30	H/M	2000	144	288	4360	1067	5.972	P.864
AF3FZ	18	H/M/F	1/40	1/40	H/M	100	10	25	780	275	0.368	P.860
AF3FZ	22	H/M/F	1/40	1/40	H/M	200	19	48	1860	576	0.693	
AF3FZ	28	H/M/F	1/40	1/40	H/M	400	36	91	2450	711	0.750	P.861
AF3FZ	32	H/M/F	1/40	1/40	H/M	750	76	191	2790	870	1.453	P.862/P.863
AF3FZ	32	H/M/F	1/40	1/40	H/M	1000	96	192	2790	870	4.606	P.863
AF3FZ	40	H/M/F	1/40	1/40	H/M	2000	191	382	4360	1067	5.934	P.864

1-1. Performance Tables

Mounting Type	Output Shaft Diameter	Shaft Arrangement	Nominal Reduction Ratio	Actual Reduction Ratio	Precision	Power Class	Allowable Average Torque (3000 r/min)	Allowable Peak Torque of Startup/ Stop	Allowable Output Shaft O.H.L.	Allowable Output Shaft Thrust Load	Internal Moment of Inertia (Input Shaft Equivalent)	Drawings
							N·m	N·m	N	N	$\times 10^{-4}$kg·m^2	
AF3FZ	18	H/M/F	1/50	1/50	H/M	100	13	31	880	294	0.368	P.860
AF3FZ	22	H/M/F	1/50	1/50	H/M	200	24	48	2060	613	0.691	
AF3FZ	28	H/M/F	1/50	1/50	H/M	400	45	91	2740	747	0.747	P.861
AF3FZ	32	H/M/F	1/50	1/50	H/M	750	95	191	2940	870	1.448	P.862/P.863
AF3FZ	32	H/M/F	1/50	1/50	H/M	1000	120	239	2940	870	4.597	P.863
AF3FZ	40	H/M/F	1/50	1/50	H/M	2000	239	473	4360	1067	5.913	P.864
AF3FZ	18	H/M/F	1/60	1/60	H/M	100	15	31	880	294	0.367	P.860
AF3FZ	22	H/M/F	1/60	1/60	H/M	200	29	57	2250	637	0.690	
AF3FZ	28	H/M/F	1/60	1/60	H/M	400	54	109	2900	767	0.746	P.861
AF3FZ	32	H/M/F	1/60	1/60	H/M	750	115	229	3040	870	1.444	P.862/P.863
AF3FZ	32	H/M/F	1/60	1/60	H/M	1000	143	286	3040	870	4.596	P.863
AF3FZ	40	H/M/F	1/60	1/60	H/M	2000	287	574	4360	1067	5.899	P.864
AF3FZ	18	H/M/F	1/75	1/75	H/M	100	18	36	980	324	0.368	P.860
AF3FZ	28	H/M/F	1/75	1/75	M	200	31	62	3090	775	0.692	P.861
AF3FZ	32	H/M/F	1/75	1/75	M	400	63	127	3330	873	0.747	P.862
AF3FZ	40	H/M/F	1/75	1/75	M	750	135	271	4460	1177	1.452	P.864
AF3FZ	18	H/M/F	1/90	1/90	H/M	100	22	44	1030	324	0.368	P.860
AF3FZ	28	H/M/F	1/90	1/90	M	200	37	74	3090	775	0.692	P.861
AF3FZ	32	H/M/F	1/90	1/90	M	400	75	150	3380	873	0.747	P.862
AF3FZ	40	H/M/F	1/90	1/90	M	750	162	325	4460	1177	1.452	P.864
AF3FZ	18	H/M/F	1/120	1/120	H/M	100	29	58	1030	343	0.367	P.860
AF3FZ	28	H/M/F	1/120	1/120	M	200	50	99	3140	785	0.692	P.861
AF3FZ	32	H/M/F	1/120	1/120	M	400	100	200	3380	883	0.746	P.862
AF3FZ	40	H/M/F	1/120	1/120	M	750	217	433	4460	1177	1.449	P.864
AF3FZ	28	H/M/F	1/150	1/150	M	200	57	86	3140	785	0.692	P.861
AF3FZ	32	H/M/F	1/150	1/150	M	400	124	186	3380	883	0.746	P.862
AF3FZ	40	H/M/F	1/150	1/150	M	750	251	377	4460	1177	1.447	P.864
AF3FZ	28	H/M/F	1/180	1/180	M	200	* 57	86	3140	785	0.691	P.861
AF3FZ	32	H/M/F	1/180	1/180	M	400	* 124	186	3580	912	0.745	P.862
AF3FZ	40	H/M/F	1/180	1/180	M	750	* 251	377	4850	1275	1.445	P.864

1-2. Drawings

AF3S Type Concentric Right Angle Hollow Bore — Shaft Diameter 15 — Backlash 1 arc min/3 arc min Specifications

<Figure 1>

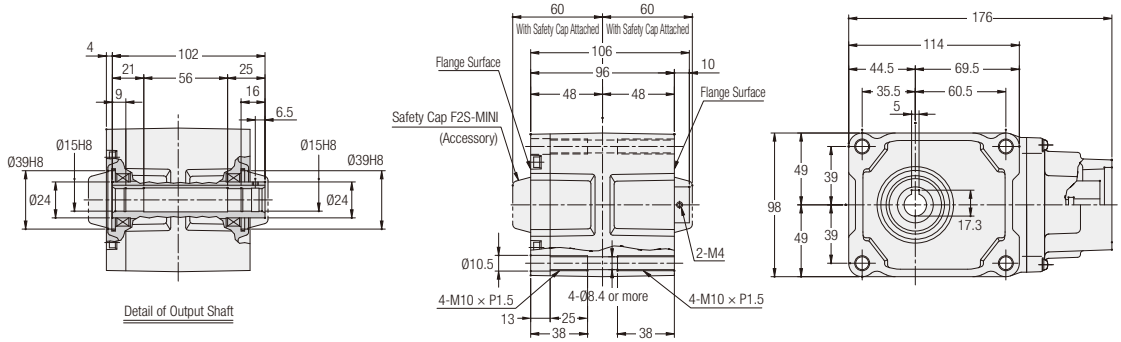

<Figure 2>

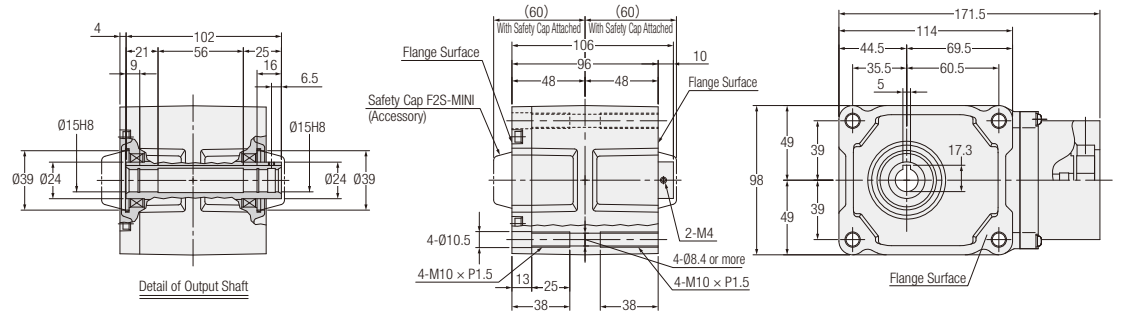

Motor Power Class	Part Number	Reduction Ratio	Figure Number	Flange Type	Approx. Weight (kg)
100W	AF3SZ15-∗∗∗□100△	10,15,20,25,30,40,50,60,75,90,120	1	F1·F3·S1·S3	3
100W	AF3SZ15-∗∗∗□100△	10,15,20,25,30,40,50,60,75,90,120	2	S6	3

Note: A reduction ratio will be indicated as ∗∗∗ in the nomenclature. In addition, backlash will be indicated as □, and a flange type will be indicated as △.
Note: Please refer to pages 912 to 918 for the detailed dimensions of the input shaft area.
Note: Please refer to page 852 for the performance table.

AF3S Type Concentric Right Angle Hollow Bore — Shaft Diameter 25 — Backlash 1 arc min/3 arc min Specifications

<Figure 3>

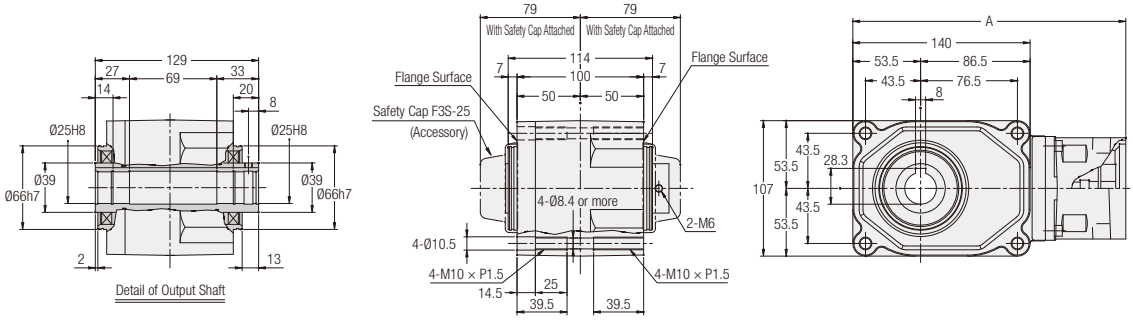

Motor Power Class	Part Number	Reduction Ratio	Figure Number	Flange Type	Approx. Weight (kg)	A
200 W	AF3SZ25-∗∗∗□200△	10, 15, 20, 25, 30, 40, 50, 60	3	F1/F2/F3/S1/S2/S3/S5	5.5	216
200 W	AF3SZ25-∗∗∗□200△	10, 15, 20, 25, 30, 40, 50, 60	3	S6	5.5	211.5
200 W	AF3SZ25-∗∗∗□200△	10, 15, 20, 25, 30, 40, 50, 60	3	S7	5.5	214.5

Note: A reduction ratio will be indicated as ∗∗∗ in the nomenclature. In addition, backlash will be indicated as □, and a flange type will be indicated as △.
Note: Please refer to pages 912 to 918 for the detailed dimensions of the input shaft area.
Note: Please refer to page 852 for the performance table.

AF3S Type Concentric Right Angle Hollow Bore — Shaft Diameter 30 — Backlash 1 arc min/3 arc min Specifications

<Figure 1>

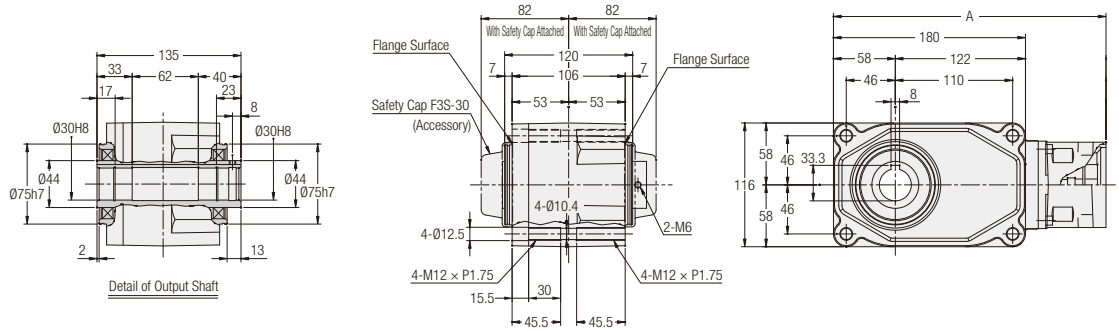

<Figure 2>

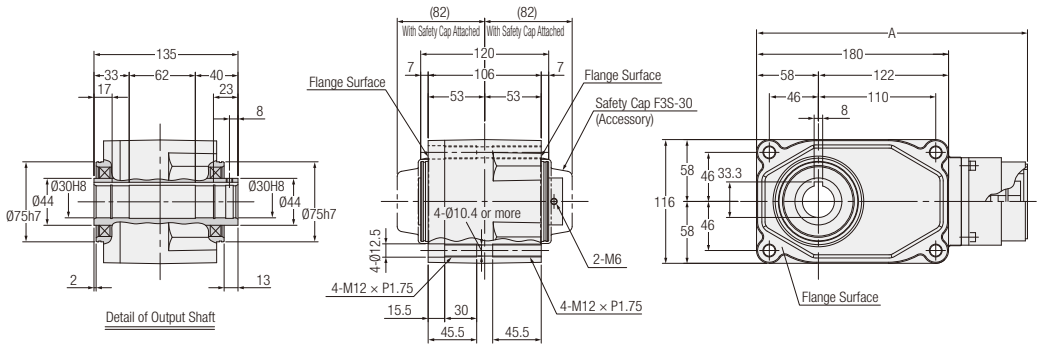

<Figure 3>

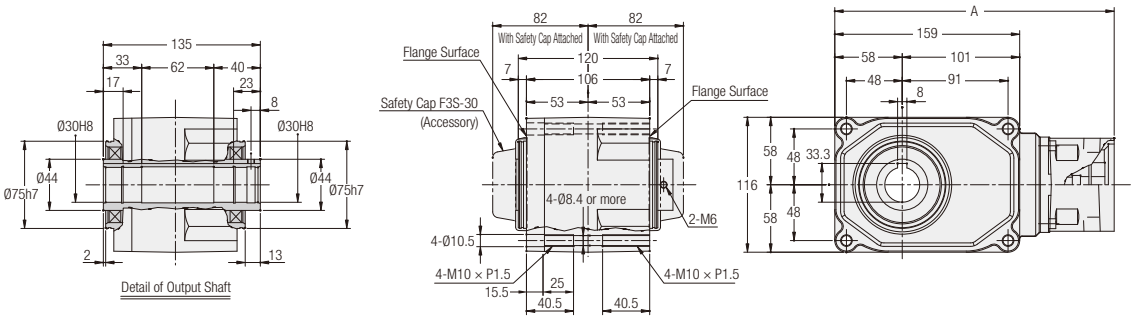

Motor Power Class	Part Number	Reduction Ratio	Figure Number	Flange Type	Approx. Weight (kg)	A
200 W	AF3SZ30-∗∗∗□200△	75, 90, 120, 150, 180	1	F1/F2/F3/S1/S2/S3/S5	8	255.5
200 W	AF3SZ30-∗∗∗□200△	75, 90, 120, 150, 180	1	S6	8	251
200 W	AF3SZ30-∗∗∗□200△	75, 90, 120, 150, 180	2	S7	8	254
400 W	AF3SZ30-∗∗∗□400△	10, 15, 20, 25, 30, 40, 50, 60	3	F1/F3/S1/S3	7.5	240.5
400 W	AF3SZ30-∗∗∗□400△	10, 15, 20, 25, 30, 40, 50, 60	3	S6	7.5	236
400 W	AF3SZ30-∗∗∗□400△	10, 15, 20, 25, 30, 40, 50, 60	3	S7	7.5	239

Note: A reduction ratio will be indicated as ∗∗∗ in the nomenclature. In addition, backlash will be indicated as □, and a flange type will be indicated as △.
Note: Please refer to pages 912 to 918 for the detailed dimensions of the input shaft area.
Note: Please refer to page 852 for the performance table.

AF3S Type Concentric Right Angle Hollow Bore — Shaft Diameter 35 — Backlash 1 arc min/3 arc min Specifications

<Figure 1>

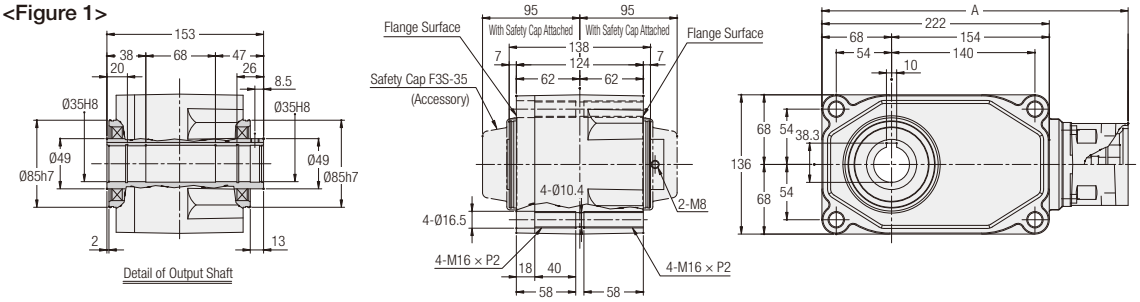

<Figure 2>

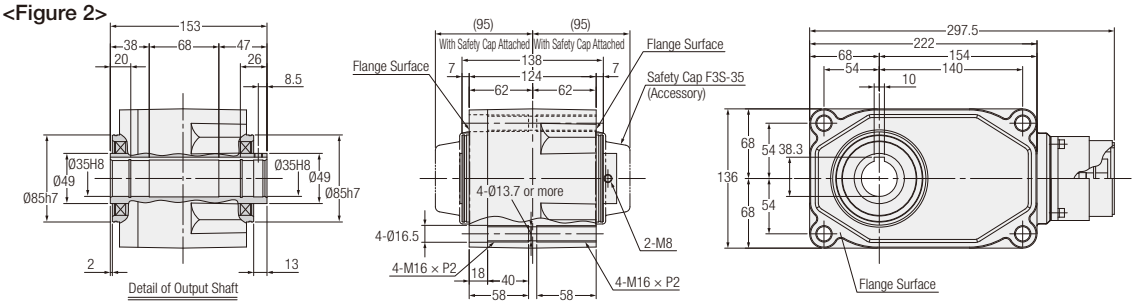

<Figure 3>

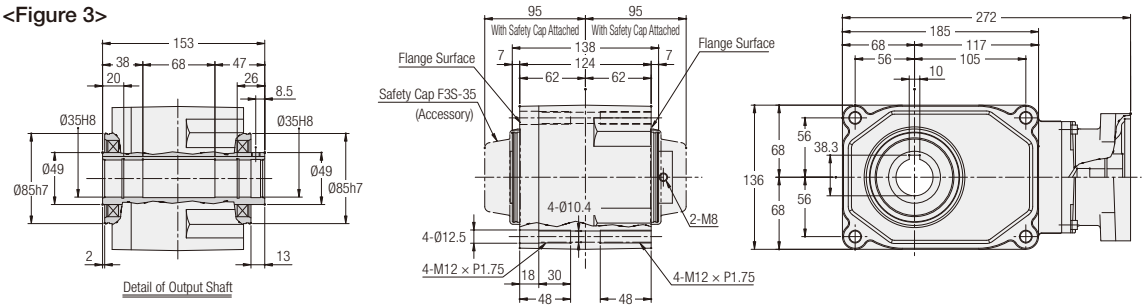

<Figure 4>

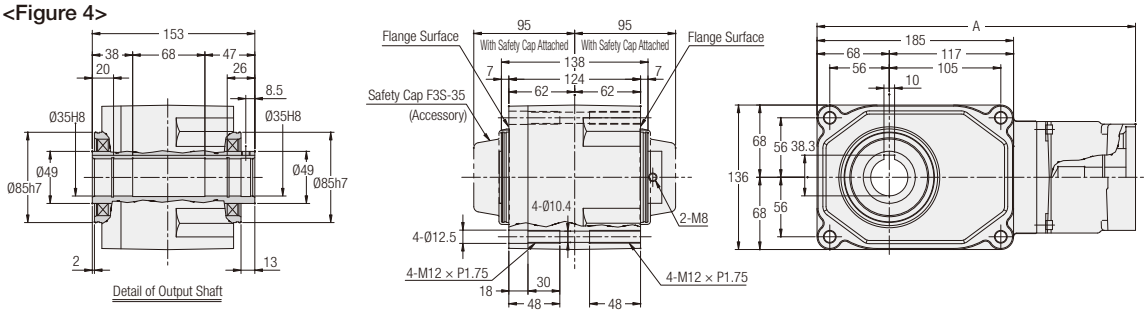

Motor Power Class	Part Number	Reduction Ratio	Figure Number	Flange Type	Approx. Weight (kg)	A
400 W	AF3SZ35-∗∗∗□400△	75, 90, 120, 150, 180	1	F1/F3/S1/S3	13.5	299
400 W	AF3SZ35-∗∗∗□400△	75, 90, 120, 150, 180	1	S6	13.5	294.5
400 W	AF3SZ35-∗∗∗□400△	75, 90, 120, 150, 180	2	S7	13.5	—
750 W	AF3SZ35-∗∗∗□750△	10, 15, 20, 25, 30, 40, 50, 60	3	F1/F2/S1/S2/S3/S4/S6	10	—
750 W	AF3SZ35-∗∗∗□750△	10, 15, 20, 25, 30, 40, 50, 60	4	SA	10	268
750 W	AF3SZ35-∗∗∗□750△	10, 15, 20, 25, 30, 40, 50, 60	4	S9	10	272
1000 W	AF3SZ35-∗∗∗□1000△	10, 20, 30, 40, 50, 60	4	K21/K22/K23/K31/K32/ K33/K43/KC9	10.5	300

Note: A reduction ratio will be indicated as ∗∗∗ in the nomenclature. In addition, backlash will be indicated as □, and a flange type will be indicated as △.
Note: Please refer to pages 912 to 918 for the detailed dimensions of the input shaft area.
Note: Please refer to page 852 for the performance table.

AF3S Type Concentric Right Angle Hollow Bore — Shaft Diameter 45 — Backlash 1 arc min/3 arc min Specifications

<Figure 1>

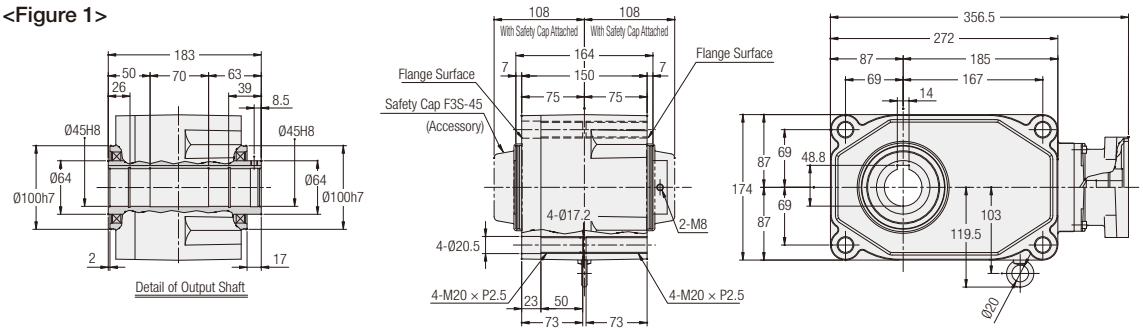

<Figure 2>

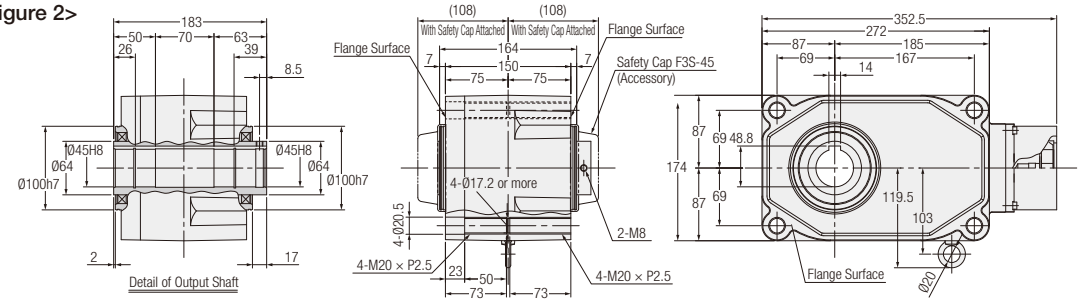

<Figure 3>

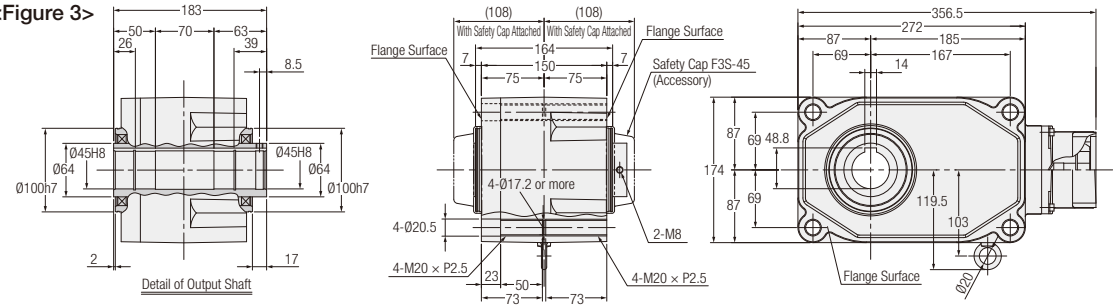

<Figure 4>

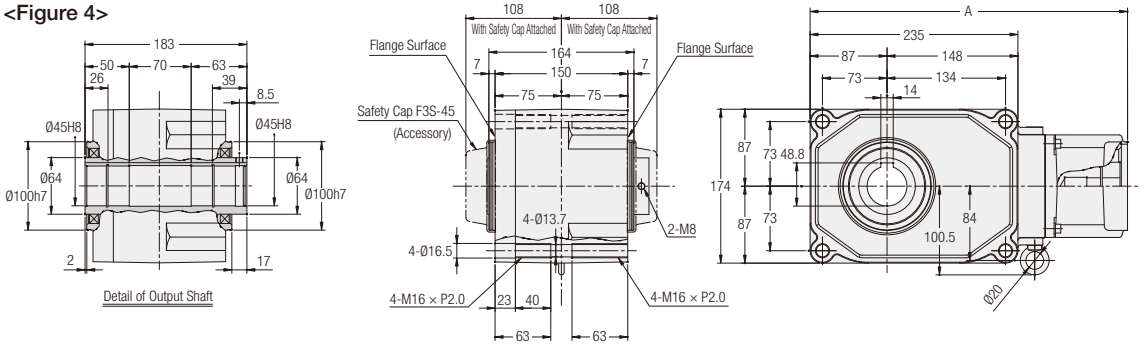

Motor Power Class	Part Number	Reduction Ratio	Figure Number	Flange Type	Approx. Weight (kg)	A
750 W	AF3SZ45-∗∗∗□750△	75, 90, 120, 150, 180	1	F1/F2/S1/S2/S3/S4/S6	18.5	—
750 W	AF3SZ45-∗∗∗□750△	75, 90, 120, 150, 180	2	SA	18.5	—
750 W	AF3SZ45-∗∗∗□750△	75, 90, 120, 150, 180	3	S9	18.5	—
2000 W	AF3SZ45-∗∗∗□2000△	10, 20, 30, 40, 50, 60	4	K21/K22/K23/K31/K32/K33/K43	18	359
				F31/F33	18	369

Note: A reduction ratio will be indicated as ∗∗∗ in the nomenclature. In addition, backlash will be indicated as □, and a flange type will be indicated as △.
Note: Please refer to pages 912 to 918 for the detailed dimensions of the input shaft area.
Note: Please refer to page 852 for the performance table.

AF3F Type Concentric Right Angle Shaft — Shaft Diameter 18 — Backlash 1 arc min/3 arc min Specifications

<Figure 1>

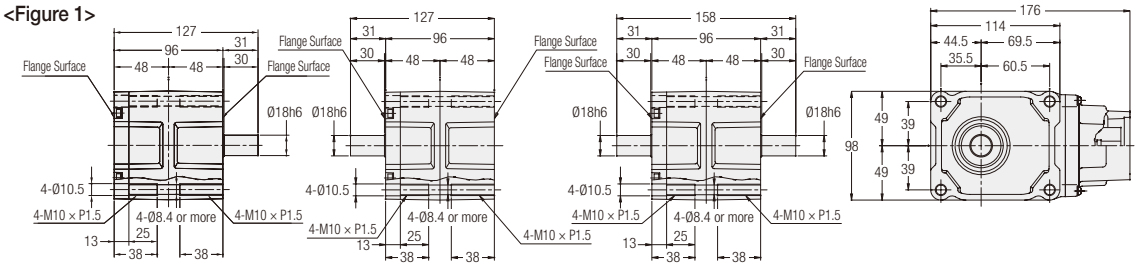

<Figure 2>

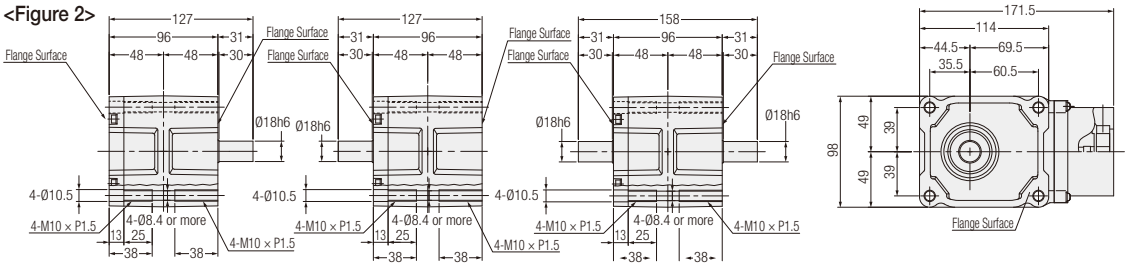

H Shaft M Shaft F Shaft

Motor Power Class	Part Number	Reduction Ratio	Figure Number	Flange Type	Approx. Weight (kg)
100 W	AF3FZ18#-∗∗∗□100△	10,15,20,25,30,40,50,60,75,90,120	1	F1·F3·S1·S3	3
100 W	AF3FZ18#-∗∗∗□100△	10,15,20,25,30,40,50,60,75,90,120	2	S6	3

Note: A shaft arrangement (H, M, F) will be indicated as # in the nomenclature. In addition, a reduction ratio will be indicated as ∗∗∗, backlash will be indicated as □, and a flange type will be indicated as △.
Note: Please refer to pages 912 to 918 for the detailed dimensions of the input shaft area.
Note: Please refer to page 854 for the performance table.

AF3F Type Concentric Right Angle Shaft — Shaft Diameter 22 — Backlash 1 arc min/3 arc min Specifications

<Figure 3>

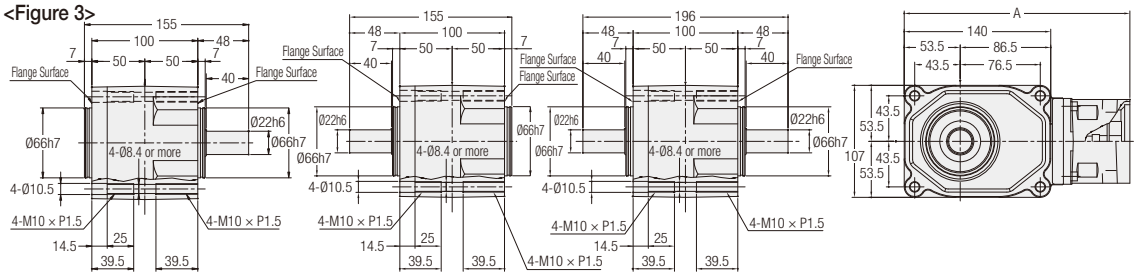

<Figure 4>

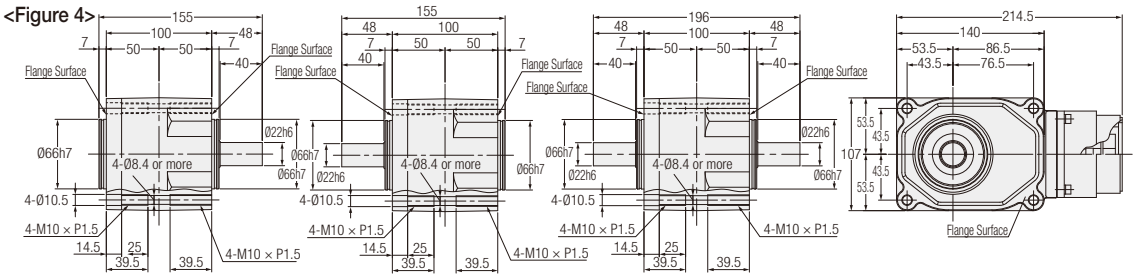

H Shaft M Shaft F Shaft

Motor Power Class	Part Number	Reduction Ratio	Figure Number	Flange Type	Approx. Weight (kg)	A
200 W	AF3FZ22#-∗∗∗□200△	10,15,20,25,30,40,50,60	3	F1·F2·F3·S1·S2·S3·S5	6	216
200 W	AF3FZ22#-∗∗∗□200△	10,15,20,25,30,40,50,60	3	S6	6	211.5
200 W	AF3FZ22#-∗∗∗□200△	10,15,20,25,30,40,50,60	4	S7	6	—

Note: A shaft arrangement (H, M, F) will be indicated as # in the nomenclature. In addition, a reduction ratio will be indicated as ∗∗∗, backlash will be indicated as □, and a flange type will be indicated as △.
Note: Please refer to pages 912 to 918 for the detailed dimensions of the input shaft area.
Note: Please refer to page 854 for the performance table.

AF3F Type Concentric Right Angle Shaft — Shaft Diameter 28 — Backlash 1 arc min/3 arc min Specifications

<Figure 1>

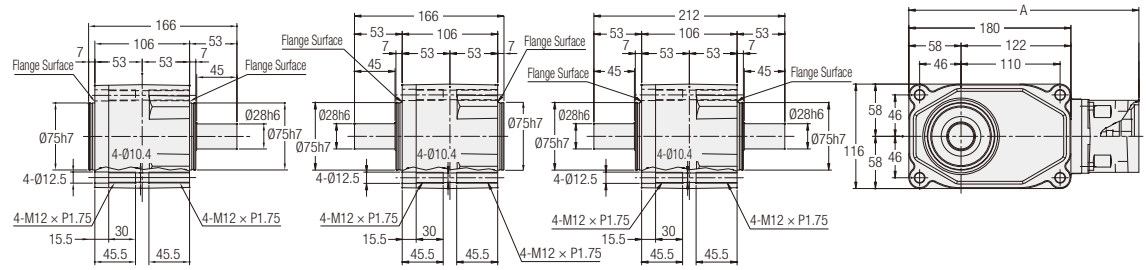

<Figure 2>

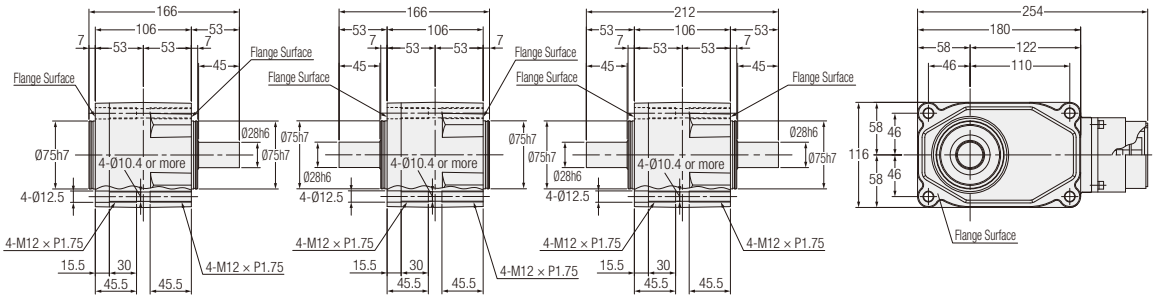

<Figure 3>

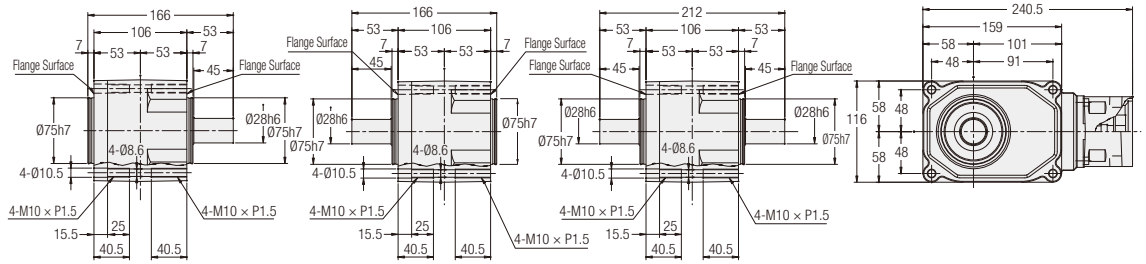

<Figure 4>

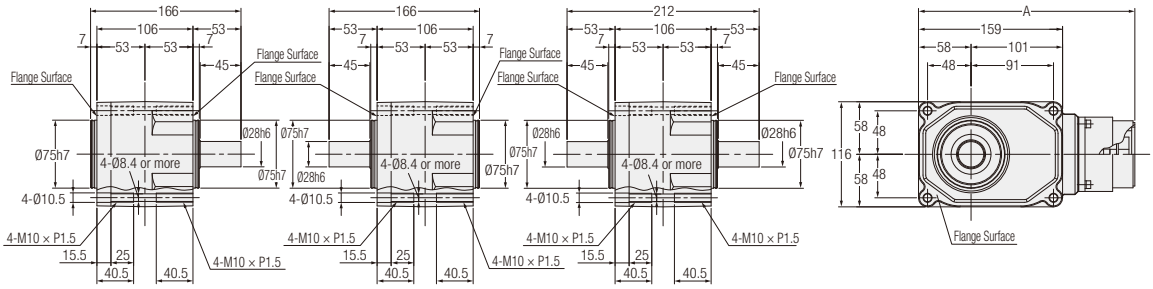

H Shaft M Shaft F Shaft

Motor Power Class	Part Number	Reduction Ratio	Figure Number	Flange Type	Approx. Weight (kg)	A
200 W	AF3FZ28#-∗∗∗□200△	75, 90, 120, 150, 180	1	F1/F2/F3/S1/S2/S3/S5	8.5	255.5
200 W	AF3FZ28#-∗∗∗□200△	75, 90, 120, 150, 180	1	S6	8.5	251
200 W	AF3FZ28#-∗∗∗□200△	75, 90, 120, 150, 180	2	S7	8.5	—
400 W	AF3FZ28#-∗∗∗□400△	10, 15, 20, 25, 30, 40, 50, 60	3	F1/F3/S1/S3	8.5	—
400 W	AF3FZ28#-∗∗∗□400△	10, 15, 20, 25, 30, 40, 50, 60	4	S6	8.5	236
400 W	AF3FZ28#-∗∗∗□400△	10, 15, 20, 25, 30, 40, 50, 60	4	S7	8.5	239

Note: A shaft arrangement (H, M, F) will be indicated as # in the nomenclature. In addition, a reduction ratio will be indicated as ∗∗∗, backlash will be indicated as □, and a flange type will be indicated as △.
Note: Please refer to pages 912 to 918 for the detailed dimensions of the input shaft area.
Note: Please refer to page 854 for the performance table.

AF3F Type Concentric Right Angle Shaft — Shaft Diameter 32 — Backlash 1 arc min/3 arc min Specifications

<Figure 1>

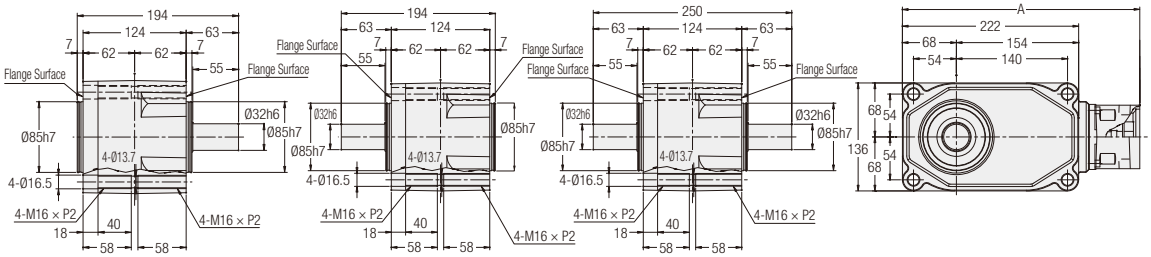

<Figure 1>

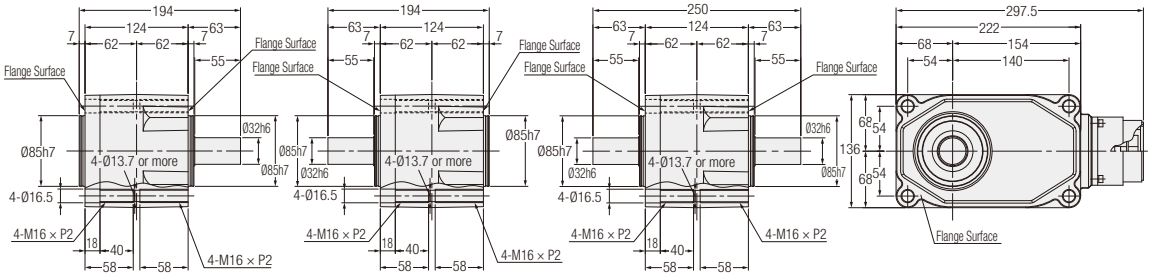

<Figure 1>

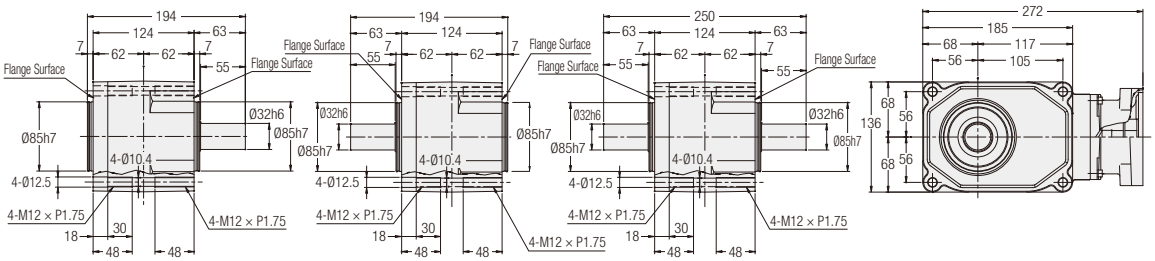

H Shaft M Shaft F Shaft

Motor Power Class	Part Number	Reduction Ratio	Figure Number	Flange Type	Approx. Weight (kg)	A
400 W	AF3FZ32#-∗∗∗□400△	75, 90, 120, 150, 180	1	F1/F3/S1/S3	14.5	299
400 W	AF3FZ32#-∗∗∗□400△	75, 90, 120, 150, 180	1	S6	14.5	294.5
400 W	AF3FZ32#-∗∗∗□400△	75, 90, 120, 150, 180	2	S7	14.5	—
750 W	AF3FZ32#-∗∗∗□750△	10, 15, 20, 25, 30, 40, 50, 60	3	F1/F2/S1/S2/S3/S4/S6	11.5	—

Note: A shaft arrangement (H, M, F) will be indicated as # in the nomenclature. In addition, a reduction ratio will be indicated as ∗∗∗, backlash will be indicated as □, and a flange type will be indicated as △.
Note: Please refer to pages 912 to 918 for the detailed dimensions of the input shaft area.
Note: Please refer to page 854 for the performance table.

<Figure 4>

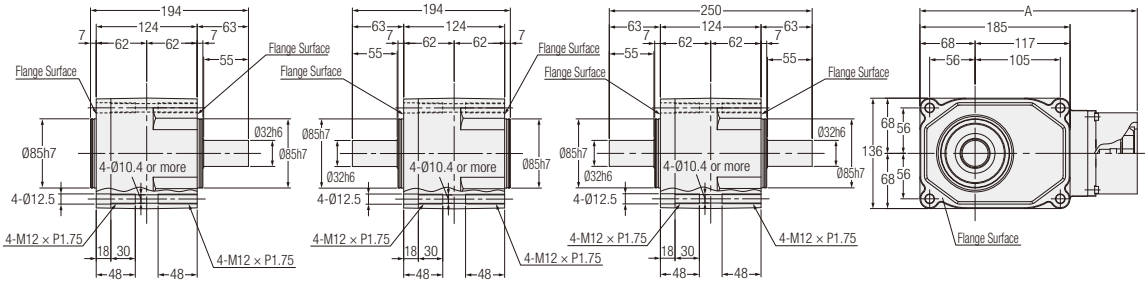

<Figure 5>

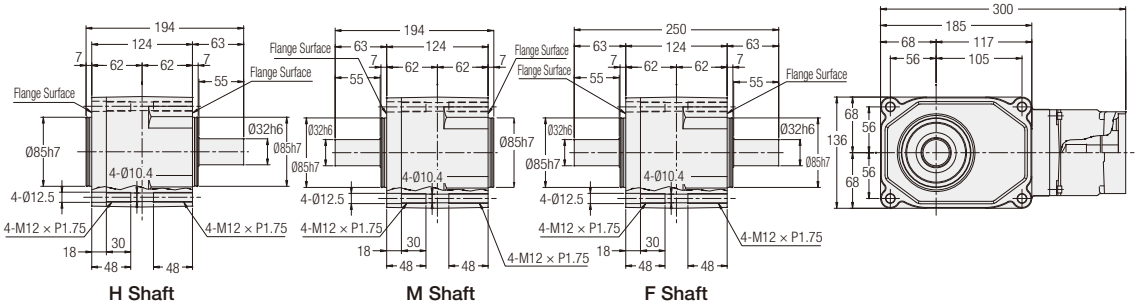

H Shaft M Shaft F Shaft

Motor Power Class	Part Number	Reduction Ratio	Figure Number	Flange Type	Approx. Weight (kg)	A
750 W	AF3FZ32#-∗∗∗□750△	10, 15, 20, 25, 30, 40, 50, 60	4	SA	11.5	268
750 W	AF3FZ32#-∗∗∗□750△	10, 15, 20, 25, 30, 40, 50, 60	4	S9	11.5	272
1000 W	AF3FZ32#-∗∗∗□1000△	10, 20, 30, 40, 50, 60	5	K21/K22/K23/K31/K32/ K33/K43/KC9	12	—

Note: A shaft arrangement (H, M, F) will be indicated as # in the nomenclature. In addition, a reduction ratio will be indicated as ∗∗∗, backlash will be indicated as □, and a flange type will be indicated as △.
Note: Please refer to pages 912 to 918 for the detailed dimensions of the input shaft area.
Note: Please refer to page 854 for the performance table.

AF3F Type Concentric Right Angle Shaft — Shaft Diameter 40 — Backlash 1 arc min/3 arc min Specifications

<Figure 1>

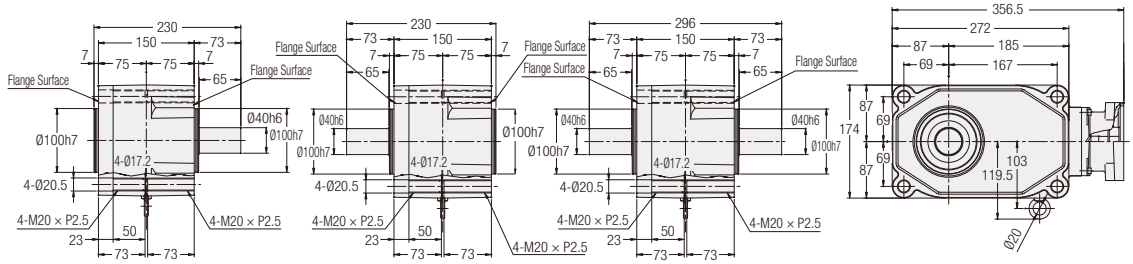

<Figure 2>

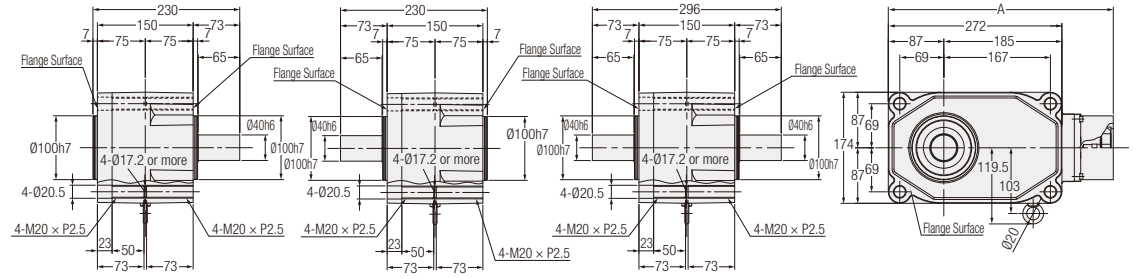

<Figure 3>

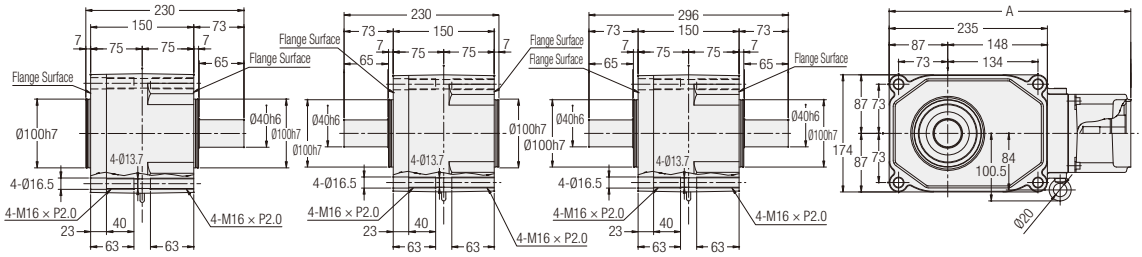

H Shaft　　M Shaft　　F Shaft

Motor Power Class	Part Number	Reduction Ratio	Figure Number	Flange Type	Approx. Weight (kg)	A
750 W	AF3FZ40#-∗∗∗□750△	75, 90, 120, 150, 180	1	F1/F2/S1/S2/S3/S4/S6	20	—
750 W	AF3FZ40#-∗∗∗□750△	75, 90, 120, 150, 180	2	SA	20	352.5
750 W	AF3FZ40#-∗∗∗□750△	75, 90, 120, 150, 180	2	S9	20	356.5
2000 W	AF3FZ40#-∗∗∗□2000△	10, 20, 30, 40, 50, 60	3	K21/K22/K23/K31/K32/ K33/K43	21	359
				F31/F33	21	369

Note: A shaft arrangement (H, M, F) will be indicated as # in the nomenclature. In addition, a reduction ratio will be indicated as ∗∗∗, backlash will be indicated as □, and a flange type will be indicated as △.
Note: Please refer to pages 912 to 918 for the detailed dimensions of the input shaft area.
Note: Please refer to page 854 for the performance table.

MEMO

2. Low Backlash High Precision Gearboxes for Servo Motors

2-1. Performance Tables

AF3S Type <Low Backlash> Performance Table by Reduction Ratio

[Notes]

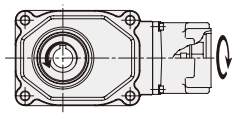

- The input speed is 3000 r/min.
- Allowable output shaft O.H.L. is the value at 20 mm from the end of the output shaft.
- For the continuous rated input torque, please refer to page 948. In addition, for the servo motor-based motor rated output torque, please refer to page 935.
- The key dimensions and tolerances for output shafts conform to JIS B 1301-1996 (plain form).
- The key for the output shaft is not supplied with concentric right angle hollow bore types.
- The internal moment of inertia (input shaft equivalent) is the value for the gearbox alone, and does not include the motor's moment of inertia.
- The allowable average torque is the continuous allowable torque value.
- Adjust the gain so that the inertial load on the output shaft side does not vibrate during acceleration and deceleration.
- In the performance table, ▭ indicates that for a clockwise (CW) motor input, the output rotates clockwise (CW) as viewed from the output shaft under the conditions shown in the figure on the right. (The arrows indicate the rotational directions of the input and output shafts, and do not limit the actual direction of rotation.)

■ At an input speed of 3000 r/min

Mounting Type	Output Shaft Diameter	Shaft Arrangement	Reduction Ratio	Actual Reduction Ratio	Precision	Power Class	Allowable Average Torque (3000 r/min)	Allowable Peak Torque of Startup/ Stop	Allowable Output Shaft O.H.L.	Allowable Output Shaft Thrust Load	Internal Moment of Inertia (Input Shaft Equivalent)	Drawings
							N·m	N·m	N	N	$\times10^{-4}$kg·m^2	
AF3SZ	30	—	1/5	1/5	L (30 arc min)	400	3.8	7.6	980	375	1.063	P.874
AF3SZ	35	—	1/5	1/5	L (30 arc min)	750	7.4	15	1760	500	2.258	P.876
AF3SZ	45	—	1/5	1/5	L (30 arc min)	2000	24	47	2550	800	8.078	P.877
AF3SZ	30	—	1/7.5	2/15	L (30 arc min)	400	5.9	12	1180	438	0.968	P.874
AF3SZ	35	—	1/7.5	2/15	L (30 arc min)	750	11	22	1860	567	1.998	P.876
AF3SZ	45	—	1/7.5	2/15	L (30 arc min)	2000	35	71	2940	900	7.395	P.877
AF3SZ	20	—	1/10	1/10	L (40 arc min)	100	2.0	3.9	940	294	0.354	P.870
AF3SZ	25	—	1/10	1/10	L (40 arc min)	200	3.8	7.6	1230	380	0.723	P.872
AF3SZ	30	—	1/10	1/10	L (30 arc min)	400	7.8	16	1520	475	0.930	P.874
AF3SZ	35	—	1/10	1/10	L (30 arc min)	750	15	29	1960	613	1.905	P.876
AF3SZ	45	—	1/10	1/10	L (30 arc min)	2000	47	94	3140	967	7.099	P.877
AF3SZ	30	—	1/12	19/235	L (30 arc min)	400	11	22	1620	500	0.909	P.874
AF3SZ	35	—	1/12	19/235	L (30 arc min)	750	20	39	2110	666	1.851	P.876
AF3SZ	45	—	1/12	19/235	L (30 arc min)	2000	57	114	3340	1034	6.954	P.877
AF3SZ	20	—	1/15	1/15	L (30 arc min)	100	3.1	6.3	1060	333	0.349	P.870
AF3SZ	25	—	1/15	1/15	L (30 arc min)	200	6.4	13	1370	429	0.708	P.872
AF3SZ	30	—	1/15	1/15	L (30 arc min)	400	13	25	1720	539	0.893	P.874
AF3SZ	35	—	1/15	1/15	L (30 arc min)	750	25	49	2250	686	1.803	P.876
AF3SZ	45	—	1/15	1/15	L (30 arc min)	2000	69	137	3630	1067	6.810	P.877
AF3SZ	20	—	1/20	1/20	L (30 arc min)	100	4.7	9.4	1180	373	0.347	P.870
AF3SZ	25	—	1/20	1/20	L (30 arc min)	200	8.8	18	1520	466	0.702	P.872
AF3SZ	30	—	1/20	1/20	L (30 arc min)	400	17	33	2010	600	0.873	P.874
AF3SZ	35	—	1/20	1/20	L (30 arc min)	750	34	69	2500	747	1.765	P.876
AF3SZ	45	—	1/20	1/20	L (30 arc min)	2000	92	184	4070	1067	6.701	P.877
AF3SZ	20	—	1/25	1/25	L (30 arc min)	100	5.9	12	1250	392	0.346	P.870
AF3SZ	25	—	1/25	19/470	L (30 arc min)	200	12	24	1670	502	0.699	P.872
AF3SZ	30	—	1/25	1/25	L (30 arc min)	400	23	45	2160	637	0.865	P.874
AF3SZ	35	—	1/25	1/25	L (30 arc min)	750	44	88	2740	796	1.744	P.876
AF3SZ	45	—	1/25	1/25	L (30 arc min)	2000	120	239	4310	1067	6.627	P.877
AF3SZ	20	—	1/30	1/30	L (30 arc min)	100	7.1	14	1330	422	0.345	P.870
AF3SZ	25	—	1/30	1/30	L (30 arc min)	200	14	27	1810	527	0.697	P.872
AF3SZ	30	—	1/30	1/30	L (30 arc min)	400	27	55	2300	662	0.857	P.874
AF3SZ	35	—	1/30	1/30	L (30 arc min)	750	53	106	2940	821	1.726	P.876
AF3SZ	45	—	1/30	1/30	L (30 arc min)	2000	144	288	4360	1067	6.587	P.877
AF3SZ	20	—	1/40	1/40	L (30 arc min)	100	9.4	19	1450	451	0.344	P.870
AF3SZ	25	—	1/40	1/40	L (30 arc min)	200	19	37	1960	576	0.694	P.872
AF3SZ	30	—	1/40	1/40	L (30 arc min)	400	36	73	2600	711	0.750	P.874
AF3SZ	35	—	1/40	1/40	L (30 arc min)	750	74	149	3140	870	1.455	P.876
AF3SZ	45	—	1/40	1/40	L (30 arc min)	2000	191	382	4360	1067	5.871	P.877
AF3SZ	20	—	1/50	1/50	L (30 arc min)	100	12	24	1490	471	0.344	P.870
AF3SZ	25	—	1/50	1/50	L (30 arc min)	200	24	47	2160	613	0.693	P.872
AF3SZ	30	—	1/50	1/50	L (30 arc min)	400	45	90	2840	747	0.748	P.874
AF3SZ	35	—	1/50	1/50	L (30 arc min)	750	94	188	3280	870	1.450	P.876
AF3SZ	45	—	1/50	1/50	L (30 arc min)	2000	239	478	4360	1067	5.853	P.877

2-1. Performance Tables

Mounting Type	Output Shaft Diameter	Shaft Arrangement	Reduction Ratio	Actual Reduction Ratio	Precision	Power Class	Allowable Average Torque (3000 r/min)	Allowable Peak Torque of Startup/ Stop	Allowable Output Shaft O.H.L.	Allowable Output Shaft Thrust Load	Internal Moment of Inertia (Input Shaft Equivalent)	Drawings
							N·m	N·m	N	N	$\times 10^{-4}$kg·m^2	
AF3SZ	20	—	1/60	1/59	L (30 arc min)	100	14	27	1490	471	0.344	P.870
AF3SZ	25	—	1/60	1/60	L (30 arc min)	200	27	55	2350	637	0.692	P.872
AF3SZ	30	—	1/60	1/60	L (30 arc min)	400	55	110	3040	767	0.746	P.874
AF3SZ	35	—	1/60	1/60	L (30 arc min)	750	113	225	3430	870	1.445	P.876
AF3SZ	45	—	1/60	1/60	L (30 arc min)	2000	287	574	4360	1067	5.843	P.877
AF3SZ	25	—	1/80	1/80	L (30 arc min)	100	17	33	2550	637	0.344	P.871
AF3SZ	30	—	1/80	1/80	L (30 arc min)	200	34	69	3090	775	0.692	P.873
AF3SZ	35	—	1/80	1/80	L (30 arc min)	400	71	141	3330	873	0.747	P.875
AF3SZ	45	—	1/80	1/80	L (30 arc min)	750	141	282	4460	1177	1.452	P.877
AF3SZ	25	—	1/100	19/1880	L (30 arc min)	100	22	43	2550	637	0.343	P.871
AF3SZ	30	—	1/100	19/1880	L (30 arc min)	200	44	88	3140	785	0.692	P.873
AF3SZ	35	—	1/100	19/1880	L (30 arc min)	400	86	172	3380	883	0.746	P.875
AF3SZ	45	—	1/100	19/1880	L (30 arc min)	750	172	345	4460	1177	1.449	P.877
AF3SZ	25	—	1/120	1/120	L (30 arc min)	100	28	57	2550	637	0.343	P.871
AF3SZ	30	—	1/120	1/120	L (30 arc min)	200	55	110	3140	785	0.692	P.873
AF3SZ	35	—	1/120	1/120	L (30 arc min)	400	102	204	3380	883	0.746	P.875
AF3SZ	45	—	1/120	1/120	L (30 arc min)	750	212	423	4460	1177	1.447	P.877
AF3SZ	25	—	1/160	1/160	L (30 arc min)	100	37	74	2550	637	0.343	P.871
AF3SZ	30	—	1/160	1/160	L (30 arc min)	200	74	149	3140	785	0.691	P.873
AF3SZ	35	—	1/160	1/160	L (30 arc min)	400	141	282	3580	912	0.745	P.875
AF3SZ	45	—	1/160	1/160	L (30 arc min)	750	282	564	4850	1275	1.445	P.877
AF3SZ	25	—	1/200	1/200	L (30 arc min)	100	47	94	2550	637	0.343	P.871
AF3SZ	30	—	1/200	1/200	L (30 arc min)	200	94	188	3140	785	0.691	P.873
AF3SZ	35	—	1/200	1/200	L (30 arc min)	400	181	363	3630	912	0.745	P.875
AF3SZ	45	—	1/200	1/200	L (30 arc min)	750	353	706	5190	1275	1.444	P.877
AF3SZ	25	—	1/240	1/240	L (30 arc min)	100	57	114	2550	637	0.343	P.871
AF3SZ	30	—	1/240	1/240	L (30 arc min)	200	110	220	3140	785	0.691	P.873
AF3SZ	35	—	1/240	1/240	L (30 arc min)	400	221	441	3630	912	0.745	P.875
AF3SZ	45	—	1/240	1/240	L (30 arc min)	750	423	847	5190	1275	1.444	P.877

AF3F Type <Low Backlash> Performance Table by Reduction Ratio

[Notes]

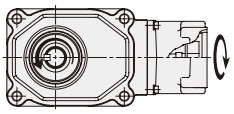

- The input speed is 3000 r/min.
- Allowable output shaft O.H.L. is the value at the middle of the output shaft.
- For the continuous rated input torque, please refer to page 948. In addition, for the servo motor-based motor rated output torque, please refer to page 937.
- The key dimensions and tolerances for output shafts conform to JIS B 1301-1996 (plain form).
- The internal moment of inertia (input shaft equivalent) is the value for the gearbox alone, and does not include the motor's moment of inertia.
- The allowable average torque is the continuous allowable torque value.
- Adjust the gain so that the inertial load on the output shaft side does not vibrate during acceleration and deceleration.
- In the performance table, ▭ indicates that for a clockwise (CW) motor input, the output rotates clockwise (CW) as viewed from the output shaft under the conditions shown in the figure on the right. (The arrows indicate the rotational directions of the input and output shafts, and do not limit the actual direction of rotation.)

■ At an input speed of 3000 r/min

Mounting Type	Output Shaft Diameter	Shaft Arrangement	Reduction Ratio	Actual Reduction Ratio	Precision	Power Class	Allowable Average Torque (3000 r/min)	Allowable Peak Torque of Startup/ Stop	Allowable Output Shaft O.H.L.	Allowable Output Shaft Thrust Load	Internal Moment of Inertia (Input Shaft Equivalent)	Drawings
							N·m	N·m	N	N	$\times10^{-4}$kg·m²	
AF3FZ	28	L/R/T	1/5	1/5	L (30 arc min)	400	3.8	7.6	980	375	1.063	P.880
AF3FZ	32	L/R/T	1/5	1/5	L (30 arc min)	750	7.4	15	1670	500	2.258	P.882
AF3FZ	40	L/R/T	1/5	1/5	L (30 arc min)	2000	24	47	2550	800	8.078	P.883
AF3FZ	28	L/R/T	1/7.5	2/15	L (30 arc min)	400	5.9	12	1180	438	0.968	P.880
AF3FZ	32	L/R/T	1/7.5	2/15	L (30 arc min)	750	11	22	1810	567	1.998	P.882
AF3FZ	40	L/R/T	1/7.5	2/15	L (30 arc min)	2000	35	71	2940	900	7.395	P.883
AF3FZ	18	L/R/T	1/10	1/10	L (40 arc min)	100	2.0	3.9	860	294	0.354	P.878
AF3FZ	22	L/R/T	1/10	1/10	L (40 arc min)	200	3.8	8	1230	380	0.723	P.879
AF3FZ	28	L/R/T	1/10	1/10	L (30 arc min)	400	7.8	16	1520	475	0.930	P.880
AF3FZ	32	L/R/T	1/10	1/10	L (30 arc min)	750	15	29	1960	613	1.905	P.882
AF3FZ	40	L/R/T	1/10	1/10	L (30 arc min)	2000	47	94	3140	967	7.099	P.883
AF3FZ	28	L/R/T	1/12	19/235	L (30 arc min)	400	11	22	1620	500	0.909	P.880
AF3FZ	32	L/R/T	1/12	19/235	L (30 arc min)	750	20	39	2060	666	1.851	P.882
AF3FZ	40	L/R/T	1/12	19/235	L (30 arc min)	2000	57	114	3340	1034	6.954	P.883
AF3FZ	18	L/R/T	1/15	1/15	L (30 arc min)	100	3.1	6.3	980	333	0.349	P.878
AF3FZ	22	L/R/T	1/15	1/15	L (30 arc min)	200	6.4	13	1370	429	0.708	P.879
AF3FZ	28	L/R/T	1/15	1/15	L (30 arc min)	400	13	25	1720	539	0.893	P.880
AF3FZ	32	L/R/T	1/15	1/15	L (30 arc min)	750	25	49	2210	686	1.803	P.882
AF3FZ	40	L/R/T	1/15	1/15	L (30 arc min)	2000	69	137	3630	1067	6.810	P.883
AF3FZ	18	L/R/T	1/20	1/20	L (30 arc min)	100	4.7	9.4	1100	373	0.347	P.878
AF3FZ	22	L/R/T	1/20	1/20	L (30 arc min)	200	8.8	18	1470	466	0.702	P.879
AF3FZ	28	L/R/T	1/20	1/20	L (30 arc min)	400	17	33	1860	600	0.873	P.880
AF3FZ	32	L/R/T	1/20	1/20	L (30 arc min)	750	34	69	2350	747	1.765	P.882
AF3FZ	40	L/R/T	1/20	1/20	L (30 arc min)	2000	92	184	4070	1067	6.701	P.883
AF3FZ	18	L/R/T	1/25	1/25	L (30 arc min)	100	5.9	12	1180	392	0.346	P.878
AF3FZ	22	L/R/T	1/25	19/470	L (30 arc min)	200	12	24	1620	502	0.699	P.879
AF3FZ	28	L/R/T	1/25	1/25	L (30 arc min)	400	23	45	2010	637	0.865	P.880
AF3FZ	32	L/R/T	1/25	1/25	L (30 arc min)	750	44	88	2500	796	1.744	P.882
AF3FZ	40	L/R/T	1/25	1/25	L (30 arc min)	2000	120	239	4310	1067	6.627	P.883
AF3FZ	18	L/R/T	1/30	1/30	L (30 arc min)	100	7.1	14	1250	422	0.345	P.878
AF3FZ	22	L/R/T	1/30	1/30	L (30 arc min)	200	14	27	1720	527	0.697	P.879
AF3FZ	28	L/R/T	1/30	1/30	L (30 arc min)	400	27	55	2210	662	0.857	P.880
AF3FZ	32	L/R/T	1/30	1/30	L (30 arc min)	750	53	106	2650	821	1.726	P.882
AF3FZ	40	L/R/T	1/30	1/30	L (30 arc min)	2000	144	288	4360	1067	6.587	P.883
AF3FZ	18	L/R/T	1/40	1/40	L (30 arc min)	100	9.4	19	1370	451	0.344	P.878
AF3FZ	22	L/R/T	1/40	1/40	L (30 arc min)	200	19	37	1860	576	0.694	P.879
AF3FZ	28	L/R/T	1/40	1/40	L (30 arc min)	400	36	73	2450	711	0.750	P.880
AF3FZ	32	L/R/T	1/40	1/40	L (30 arc min)	750	74	149	2790	870	1.455	P.882
AF3FZ	40	L/R/T	1/40	1/40	L (30 arc min)	2000	191	382	4360	1067	5.871	P.883
AF3FZ	18	L/R/T	1/50	1/50	L (30 arc min)	100	12	24	1490	471	0.344	P.878
AF3FZ	22	L/R/T	1/50	1/50	L (30 arc min)	200	24	47	2060	613	0.693	P.879
AF3FZ	28	L/R/T	1/50	1/50	L (30 arc min)	400	45	90	2740	747	0.748	P.880
AF3FZ	32	L/R/T	1/50	1/50	L (30 arc min)	750	94	188	2940	870	1.450	P.882
AF3FZ	40	L/R/T	1/50	1/50	L (30 arc min)	2000	239	478	4360	1067	5.853	P.883

2-1. Performance Tables

Mounting Type	Output Shaft Diameter	Shaft Arrangement	Reduction Ratio	Actual Reduction Ratio	Precision	Power Class	Allowable Average Torque (3000 r/min)	Allowable Peak Torque of Startup/ Stop	Allowable Output Shaft O.H.L.	Allowable Output Shaft Thrust Load	Internal Moment of Inertia (Input Shaft Equivalent)	Drawings
							N·m	N·m	N	N	$\times 10^{-4}$kg·m^2	
AF3FZ	18	L/R/T	1/60	1/59	L (30 arc min)	100	14	27	1490	471	0.344	P.878
AF3FZ	22	L/R/T	1/60	1/60	L (30 arc min)	200	27	55	2250	637	0.692	P.879
AF3FZ	28	L/R/T	1/60	1/60	L (30 arc min)	400	55	110	2890	767	0.746	P.880
AF3FZ	32	L/R/T	1/60	1/60	L (30 arc min)	750	113	225	3040	870	1.445	P.882
AF3FZ	40	L/R/T	1/60	1/60	L (30 arc min)	2000	287	574	4360	1067	5.843	P.883
AF3FZ	22	L/R/T	1/80	1/80	L (30 arc min)	100	17	33	2550	637	0.344	P.879
AF3FZ	28	L/R/T	1/80	1/80	L (30 arc min)	200	34	69	3090	775	0.692	P.880
AF3FZ	32	L/R/T	1/80	1/80	L (30 arc min)	400	71	141	3330	873	0.747	P.881
AF3FZ	40	L/R/T	1/80	1/80	L (30 arc min)	750	141	282	4460	1177	1.452	P.883
AF3FZ	22	L/R/T	1/100	19/1880	L (30 arc min)	100	22	43	2550	637	0.343	P.879
AF3FZ	28	L/R/T	1/100	19/1880	L (30 arc min)	200	44	88	3140	785	0.692	P.880
AF3FZ	32	L/R/T	1/100	19/1880	L (30 arc min)	400	86	172	3380	883	0.746	P.881
AF3FZ	40	L/R/T	1/100	19/1880	L (30 arc min)	750	172	345	4460	1177	1.449	P.883
AF3FZ	22	L/R/T	1/120	1/120	L (30 arc min)	100	28	57	2550	637	0.343	P.879
AF3FZ	28	L/R/T	1/120	1/120	L (30 arc min)	200	55	110	3140	785	0.692	P.880
AF3FZ	32	L/R/T	1/120	1/120	L (30 arc min)	400	102	204	3380	883	0.746	P.881
AF3FZ	40	L/R/T	1/120	1/120	L (30 arc min)	750	212	423	4460	1177	1.447	P.883
AF3FZ	22	L/R/T	1/160	1/160	L (30 arc min)	100	37	74	2550	637	0.343	P.879
AF3FZ	28	L/R/T	1/160	1/160	L (30 arc min)	200	74	149	3140	785	0.691	P.880
AF3FZ	32	L/R/T	1/160	1/160	L (30 arc min)	400	141	282	3580	912	0.745	P.881
AF3FZ	40	L/R/T	1/160	1/160	L (30 arc min)	750	282	564	4850	1275	1.445	P.883
AF3FZ	22	L/R/T	1/200	1/200	L (30 arc min)	100	47	94	2550	637	0.343	P.879
AF3FZ	28	L/R/T	1/200	1/200	L (30 arc min)	200	94	188	3140	785	0.691	P.880
AF3FZ	32	L/R/T	1/200	1/200	L (30 arc min)	400	181	363	3630	912	0.745	P.881
AF3FZ	40	L/R/T	1/200	1/200	L (30 arc min)	750	353	706	5190	1275	1.444	P.883
AF3FZ	22	L/R/T	1/240	1/240	L (30 arc min)	100	57	114	2550	637	0.343	P.879
AF3FZ	28	L/R/T	1/240	1/240	L (30 arc min)	200	110	220	3140	785	0.691	P.880
AF3FZ	32	L/R/T	1/240	1/240	L (30 arc min)	400	221	441	3630	912	0.745	P.881
AF3FZ	40	L/R/T	1/240	1/240	L (30 arc min)	750	423	847	5190	1275	1.444	P.883

2-2. Drawings

AF3S Type Concentric Right Angle Hollow Bore — Shaft Diameter 20 — Low Backlash

<Figure 1>

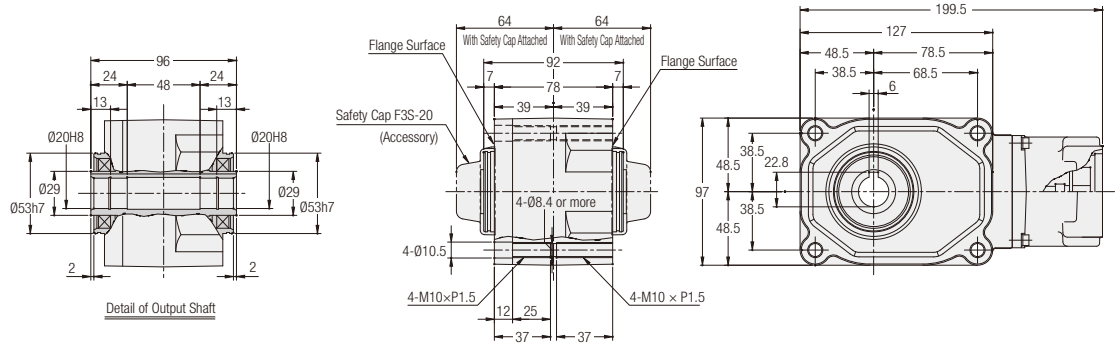

<Figure 2>

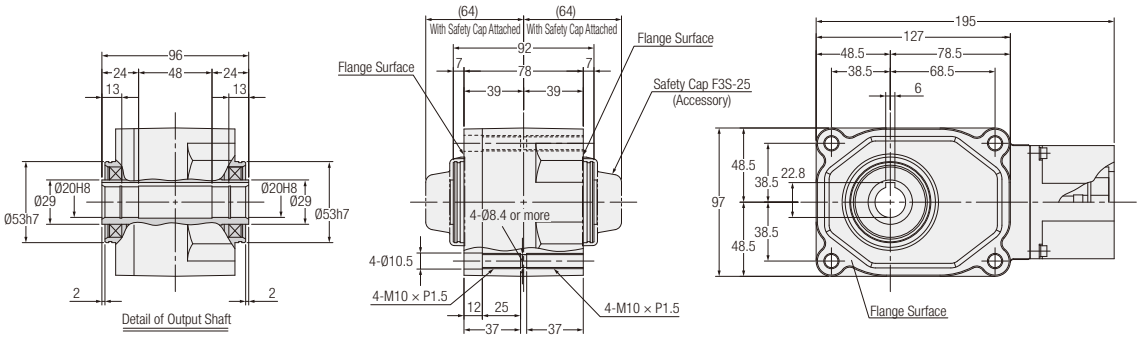

Motor Power Class	Part Number	Reduction Ratio	Figure Number	Flange Type	Approx. Weight (kg)
100 W	AF3SZ20-∗∗∗□100△	10, 15, 20, 25, 30, 40, 50, 60	1	F1/F3/S1/S3	3.5
100 W	AF3SZ20-∗∗∗□100△	10, 15, 20, 25, 30, 40, 50, 60	2	S6	3.5

Note: A reduction ratio will be indicated as ∗∗∗ in the nomenclature. In addition, backlash will be indicated as □, and a flange type will be indicated as △.
Note: Please refer to pages 912 to 918 for the detailed dimensions of the input shaft area.
Note: Please refer to page 866 for the performance table.

AF3S Type Concentric Right Angle Hollow Bore — Shaft Diameter 25 — Low Backlash

<Figure 1>

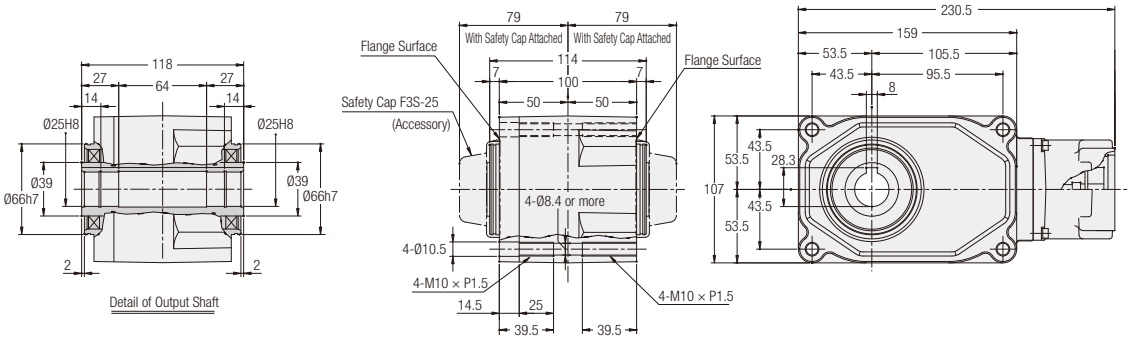

<Figure 2>

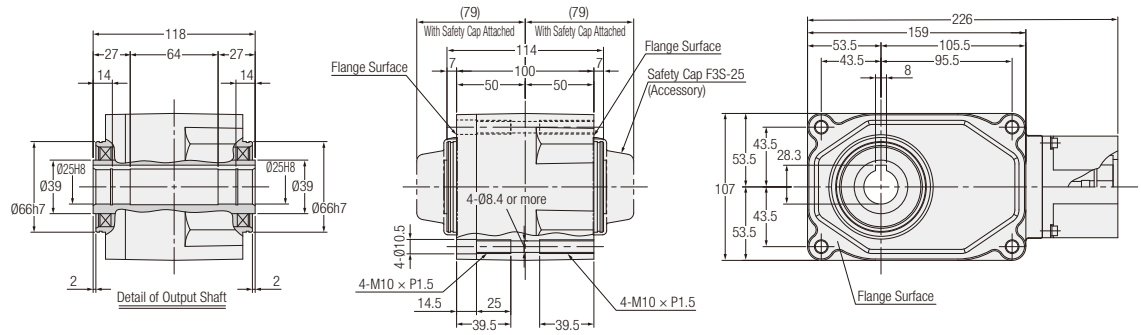

Motor Power Class	Part Number	Reduction Ratio	Figure Number	Flange Type	Approx. Weight (kg)
100 W	AF3SZ25-∗∗∗□100△	80, 100, 120, 160, 200, 240	1	F1/F3/S1/S3	5
100 W	AF3SZ25-∗∗∗□100△	80, 100, 120, 160, 200, 240	2	S6	5

Note: A reduction ratio will be indicated as ∗∗∗ in the nomenclature. In addition, backlash will be indicated as □, and a flange type will be indicated as △.
Note: Please refer to pages 912 to 918 for the detailed dimensions of the input shaft area.
Note: Please refer to page 866 for the performance table.

<Figure 3>

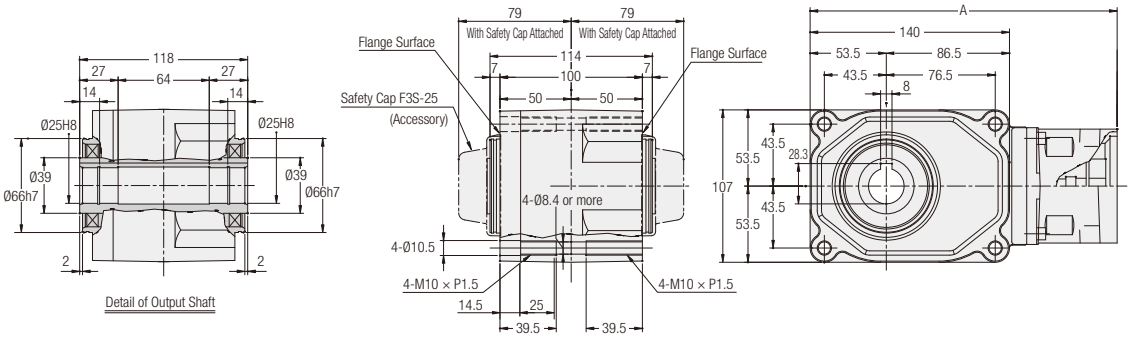

<Figure 4>

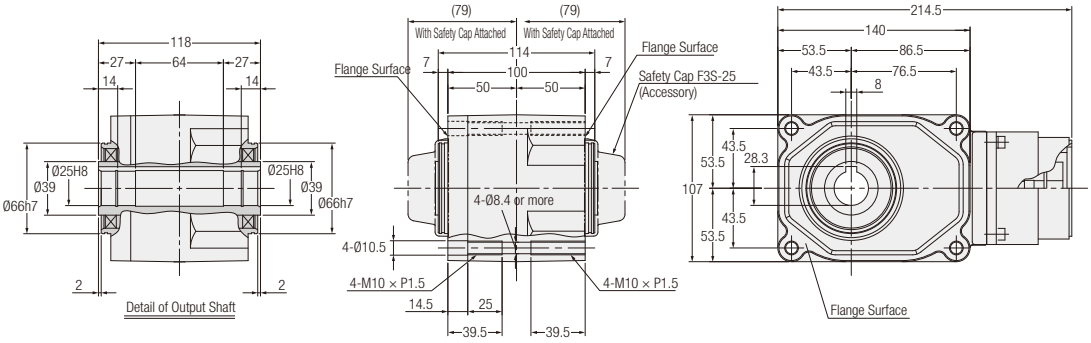

Motor Power Class	Part Number	Reduction Ratio	Figure Number	Flange Type	Approx. Weight (kg)	A
200 W	AF3SZ25-∗∗∗□200△	10, 15, 20, 25, 30, 40, 50, 60	3	F1/F2/F3/S1/S2/S3	5.5	216
200 W	AF3SZ25-∗∗∗□200△	10, 15, 20, 25, 30, 40, 50, 60	3	S6	5.5	211.5
200 W	AF3SZ25-∗∗∗□200△	10, 15, 20, 25, 30, 40, 50, 60	4	S7	5.5	—

Note: A reduction ratio will be indicated as ∗∗∗ in the nomenclature. In addition, backlash will be indicated as □, and a flange type will be indicated as △.
Note: Please refer to pages 912 to 918 for the detailed dimensions of the input shaft area.
Note: Please refer to page 866 for the performance table.

AF3S Type Concentric Right Angle Hollow Bore — Shaft Diameter 30 — Low Backlash

<Figure 1>

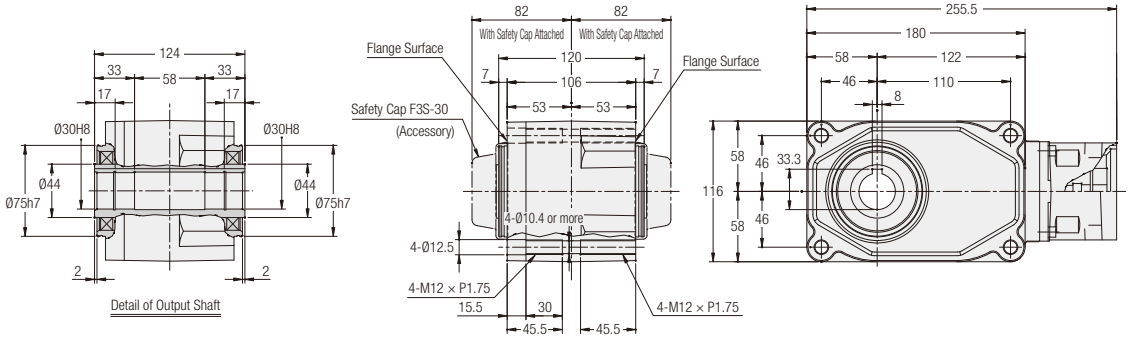

<Figure 2>

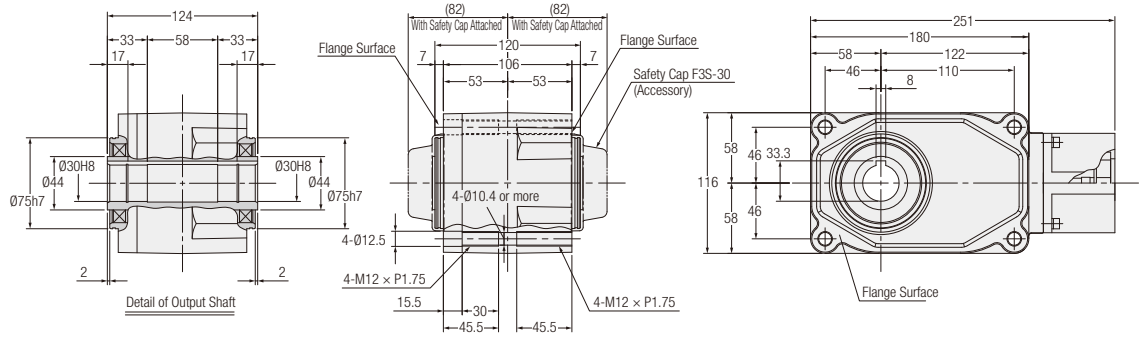

<Figure 3>

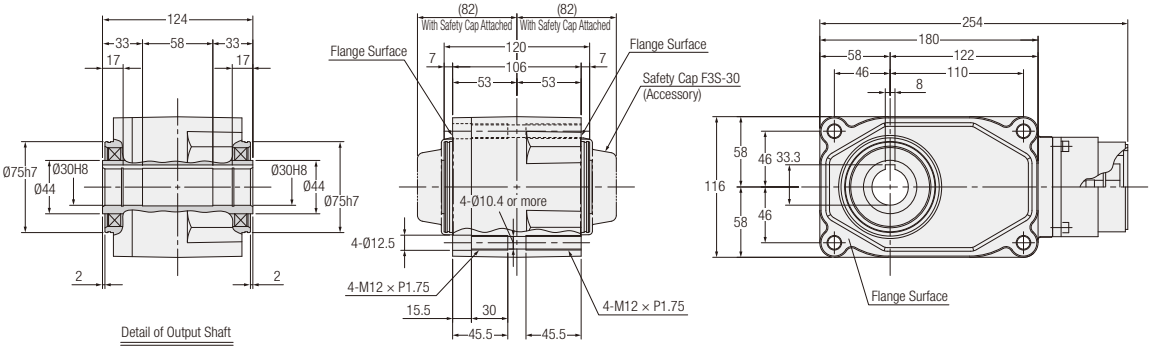

Motor Power Class	Part Number	Reduction Ratio	Figure Number	Flange Type	Approx. Weight (kg)
200 W	AF3SZ30-∗∗∗□200△	80, 100, 120, 160, 200, 240	1	F1/F2/F3/S1/S2/S3	8
200 W	AF3SZ30-∗∗∗□200△	80, 100, 120, 160, 200, 240	2	S6	8
200 W	AF3SZ30-∗∗∗□200△	80, 100, 120, 160, 200, 240	3	S7	8

Note: A reduction ratio will be indicated as ∗∗∗ in the nomenclature. In addition, backlash will be indicated as □, and a flange type will be indicated as △.
Note: Please refer to pages 912 to 918 for the detailed dimensions of the input shaft area.
Note: Please refer to page 866 for the performance table.

<Figure 4>

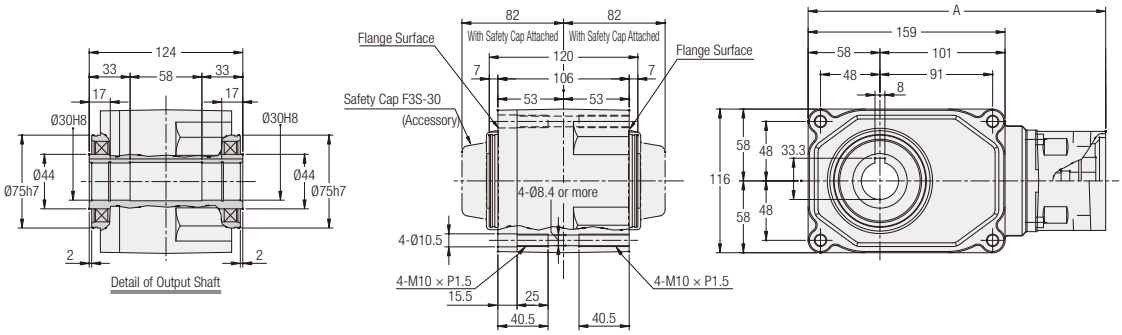

<Figure 5>

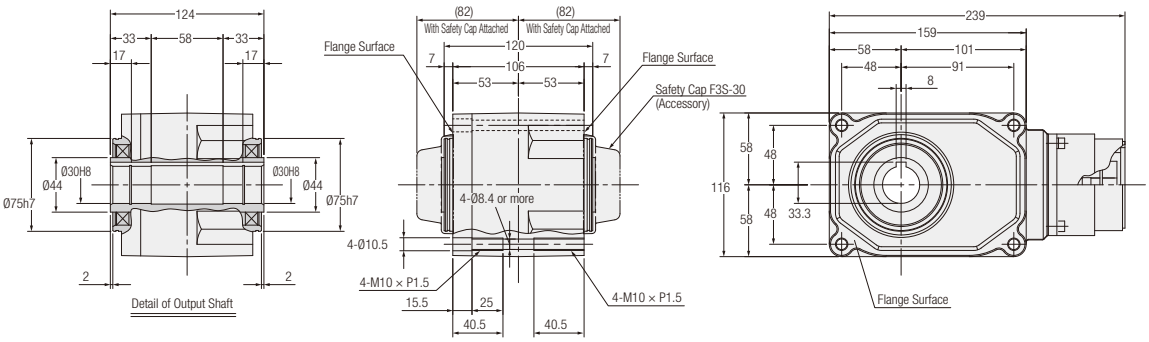

Motor Power Class	Part Number	Reduction Ratio	Figure Number	Flange Type	Approx. Weight (kg)	A
400 W	AF3SZ30-∗∗∗□400△	5, 7.5, 10, 12, 15, 20, 25, 30, 40, 50, 60	4	F1/F3/S1/S3	7.5	240.5
400 W	AF3SZ30-∗∗∗□400△	5, 7.5, 10, 12, 15, 20, 25, 30, 40, 50, 60	4	S6	7.5	236
400 W	AF3SZ30-∗∗∗□400△	5, 7.5, 10, 12, 15, 20, 25, 30, 40, 50, 60	5	S7	7.5	—

Note: A reduction ratio will be indicated as ∗∗∗ in the nomenclature. In addition, backlash will be indicated as □, and a flange type will be indicated as △.
Note: Please refer to pages 912 to 918 for the detailed dimensions of the input shaft area.
Note: Please refer to page 866 for the performance table.

AF3S Type Concentric Right Angle Hollow Bore — Shaft Diameter 35 — Low Backlash

<Figure 1>

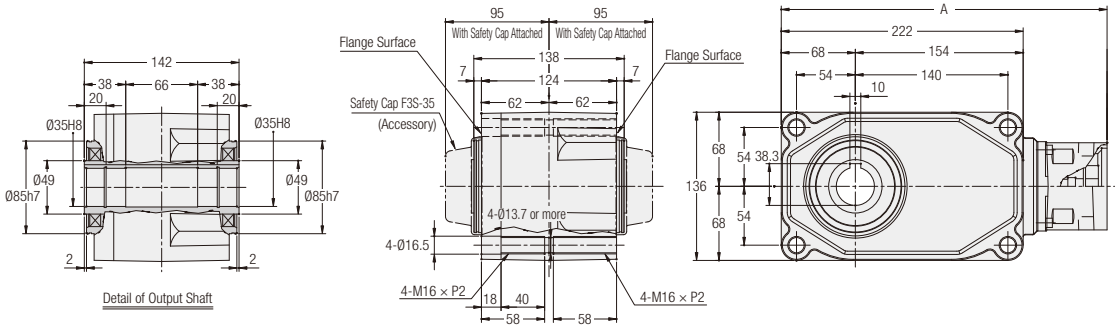

<Figure 2>

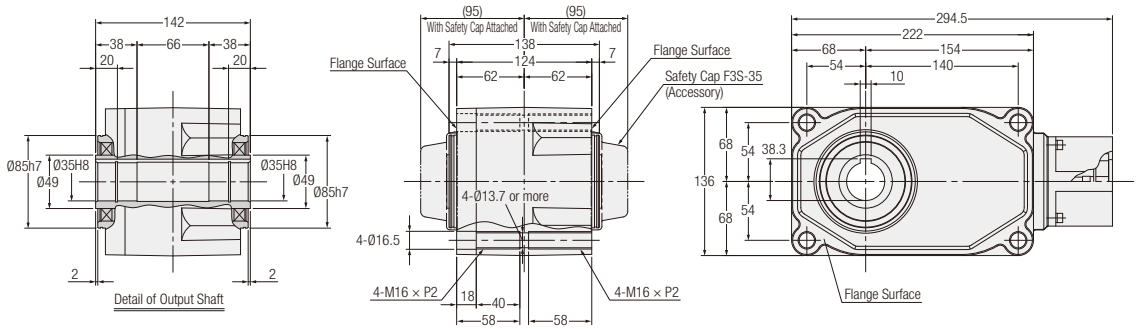

Motor Power Class	Part Number	Reduction Ratio	Figure Number	Flange Type	Approx. Weight (kg)	A
400 W	AF3SZ35-∗∗∗□400△	80, 100, 120, 160, 200, 240	1	F1/F3/S1/S3	13.5	299
400 W	AF3SZ35-∗∗∗□400△	80, 100, 120, 160, 200, 240	1	S6	13.5	294.5
400 W	AF3SZ35-∗∗∗□400△	80, 100, 120, 160, 200, 240	2	S7	13.5	—

Note: A reduction ratio will be indicated as ∗∗∗ in the nomenclature. In addition, backlash will be indicated as □, and a flange type will be indicated as △.
Note: Please refer to pages 912 to 918 for the detailed dimensions of the input shaft area.
Note: Please refer to page 866 for the performance table.

<Figure 3>

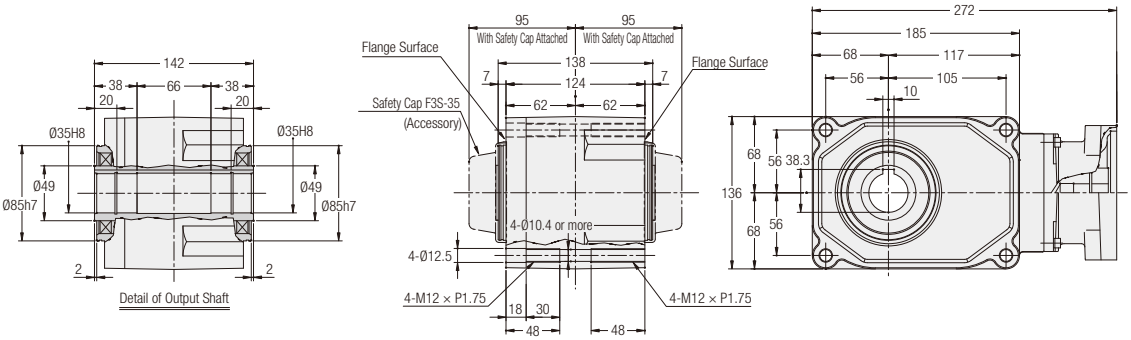

<Figure 4>

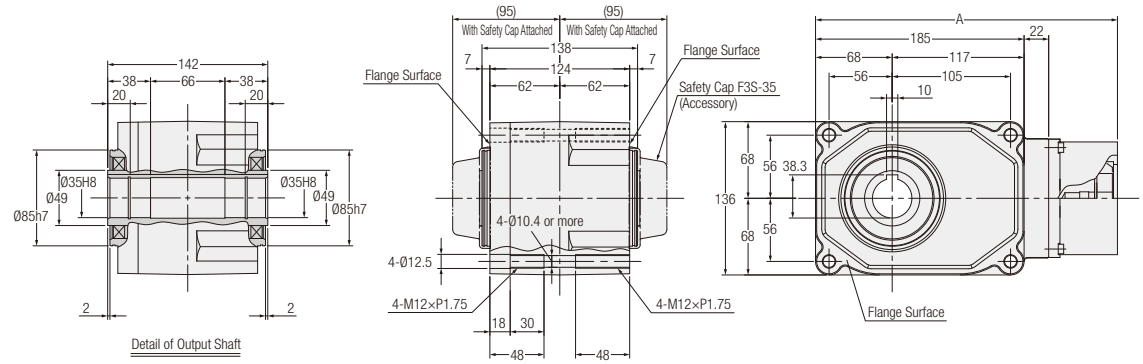

Motor Power Class	Part Number	Reduction Ratio	Figure Number	Flange Type	Approx. Weight (kg)	A
750 W	AF3SZ35-∗∗∗□750△	5, 7.5, 10, 12, 15, 20, 25, 30, 40, 50, 60	3	F1/F2/S1/S2/S3/S4	10	—
750 W	AF3SZ35-∗∗∗□750△	5, 7.5, 10, 12, 15, 20, 25, 30, 40, 50, 60	4	SA	10	268
750 W	AF3SZ35-∗∗∗□750△	5, 7.5, 10, 12, 15, 20, 25, 30, 40, 50, 60	4	S9	10	272

Note: A reduction ratio will be indicated as ∗∗∗ in the nomenclature. In addition, backlash will be indicated as □, and a flange type will be indicated as △.
Note: Please refer to pages 912 to 918 for the detailed dimensions of the input shaft area.
Note: Please refer to page 866 for the performance table.

AF3S Type Concentric Right Angle Hollow Bore — Shaft Diameter 45 — Low Backlash

<Figure 1>

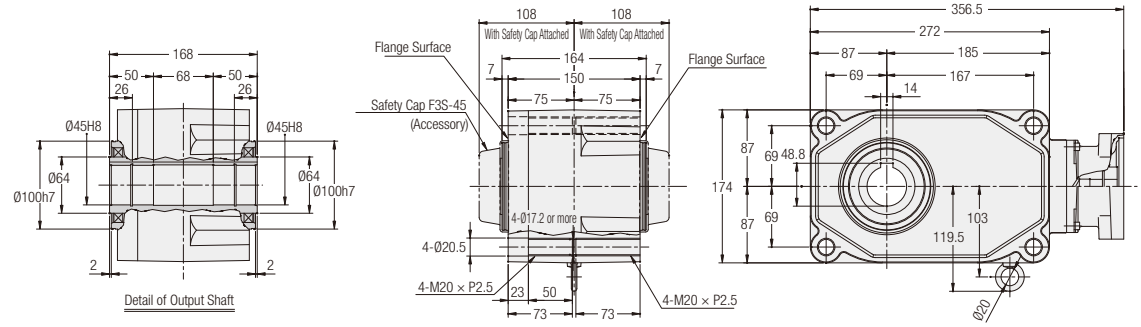

<Figure 2>

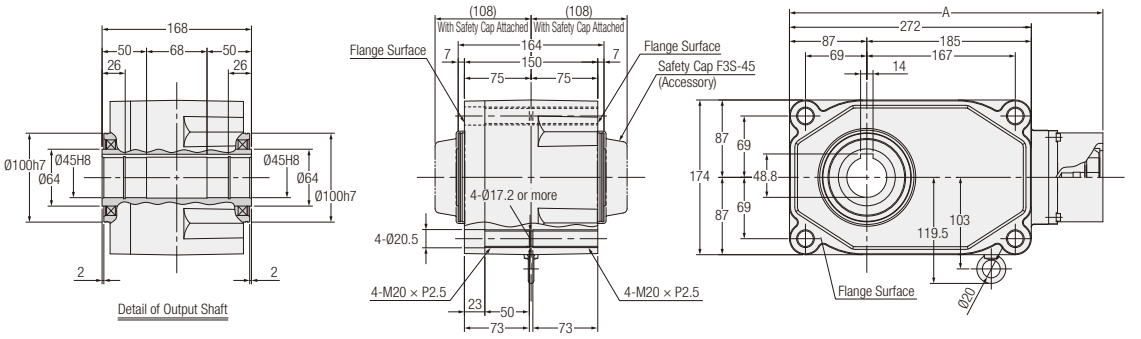

<Figure 3>

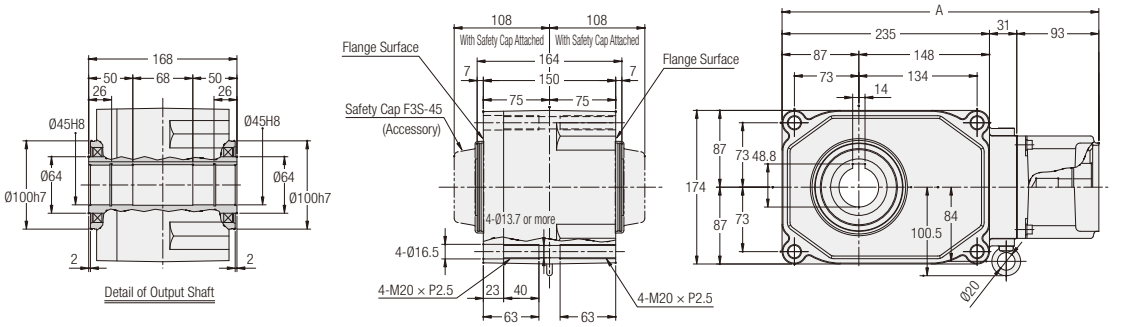

Motor Power Class	Part Number	Reduction Ratio	Figure Number	Flange Type	Approx. Weight (kg)	A
750 W	AF3SZ45-∗∗∗□750△	80, 100, 120, 160, 200, 240	1	F1/F2/S1/S2/S3/S4	18.5	—
750 W	AF3SZ45-∗∗∗□750△	80, 100, 120, 160, 200, 240	2	SA	18.5	352.5
750 W	AF3SZ45-∗∗∗□750△	80, 100, 120, 160, 200, 240	2	S9	18.5	356.5
2000 W	AF3SZ45-∗∗∗□2000△	5, 7.5, 10, 12, 15, 20, 25, 30, 40, 50, 60	3	K21/K22/K23	18	359
				K31/K32/K33/K43		359
				F31/F33		369

Note: A reduction ratio will be indicated as ∗∗∗ in the nomenclature. In addition, backlash will be indicated as □, and a flange type will be indicated as △.
Note: Please refer to pages 912 to 918 for the detailed dimensions of the input shaft area.
Note: Please refer to page 866 for the performance table.

AF3F Type Concentric Right Angle Shaft — Shaft Diameter 18 — Low Backlash

<Figure 1>

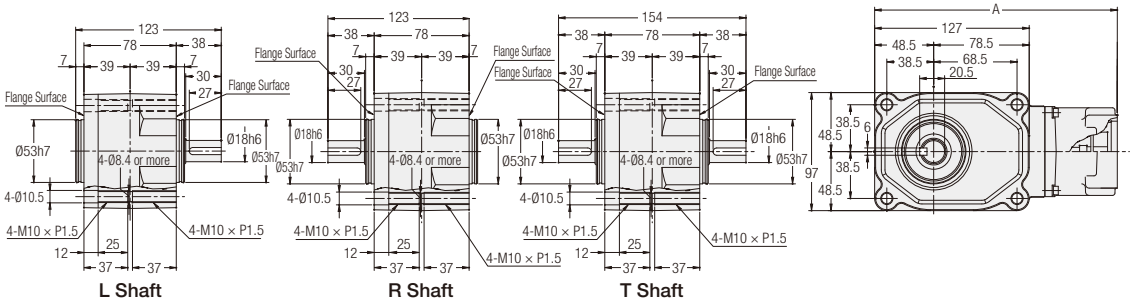

Motor Power Class	Part Number	Reduction Ratio	Figure Number	Flange Type	Approx. Weight (kg)	A
100 W	AF3FZ18#-∗∗∗□100△	10, 15, 20, 25, 30, 40, 50, 60	1	F1/F3/S1/S3	3.5	199.5
100 W	AF3FZ18#-∗∗∗□100△	10, 15, 20, 25, 30, 40, 50, 60	1	S6	3.5	195

Note: A shaft arrangement (L, R, T) will be indicated as # in the nomenclature. In addition, a reduction ratio will be indicated as ∗∗∗, backlash will be indicated as □, and a flange type will be indicated as △.
Note: Please refer to pages 912 to 918 for the detailed dimensions of the input shaft area.
Note: Please refer to page 868 for the performance table.

AF3F Type Concentric Right Angle Shaft — Shaft Diameter 22 — Low Backlash

<Figure 1>

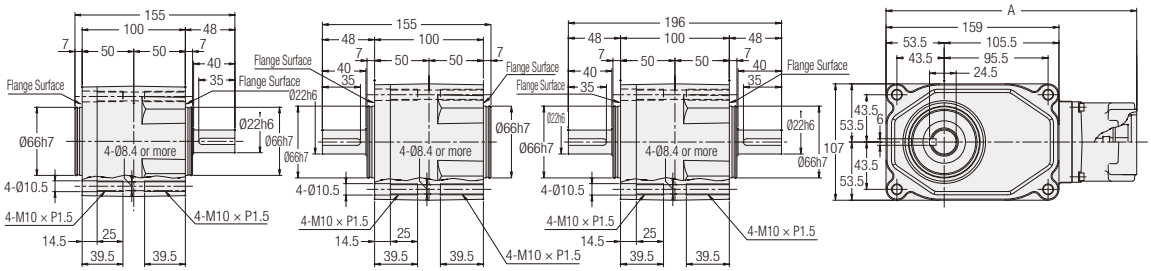

<Figure 2>

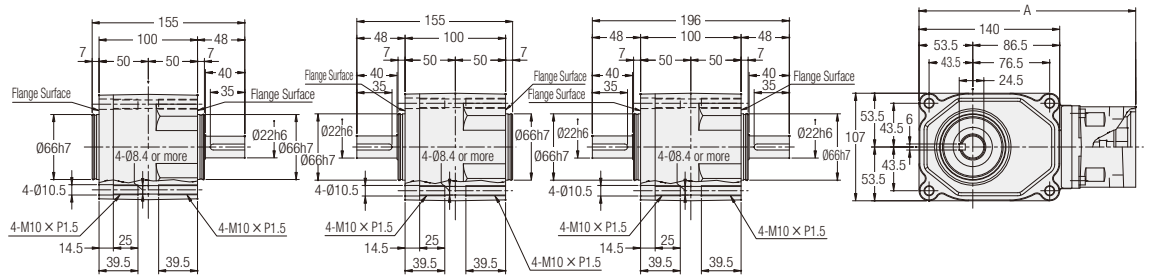

<Figure 3>

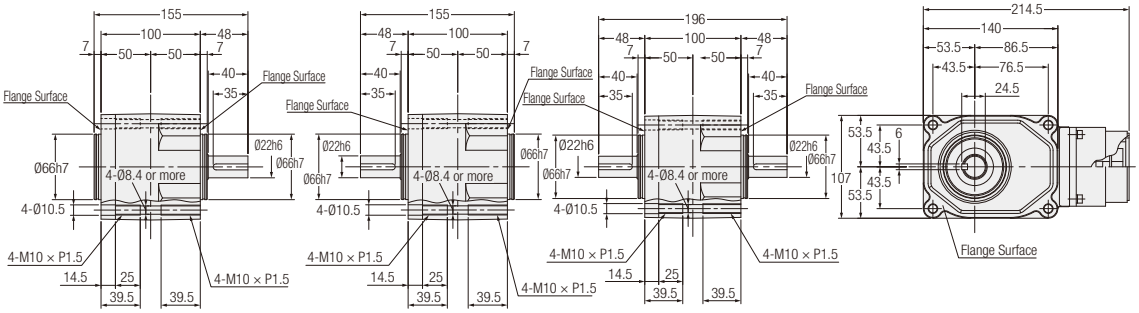

L Shaft R Shaft T Shaft

Motor Power Class	Part Number	Reduction Ratio	Figure Number	Flange Type	Approx. Weight (kg)	A
100 W	AF3FZ22#-∗∗∗□100△	80, 100, 120, 160, 200, 240	1	F1/F3/S1/S3	6	230.5
100 W	AF3FZ22#-∗∗∗□100△	80, 100, 120, 160, 200, 240	1	S6	6	230.5
200 W	AF3FZ22#-∗∗∗□200△	10, 15, 20, 25, 30, 40, 50, 60	2	F1/F2/F3/S1/S2/S3	6	216
200 W	AF3FZ22#-∗∗∗□200△	10, 15, 20, 25, 30, 40, 50, 60	2	S6	6	211.5
200 W	AF3FZ22#-∗∗∗□200△	10, 15, 20, 25, 30, 40, 50, 60	3	S7	6	—

Note: A shaft arrangement (L, R, T) will be indicated as # in the nomenclature. In addition, a reduction ratio will be indicated as ∗∗∗, backlash will be indicated as □, and a flange type will be indicated as △.
Note: Please refer to pages 912 to 918 for the detailed dimensions of the input shaft area.
Note: Please refer to page 868 for the performance table.

AF3F Type Concentric Right Angle Shaft — Shaft Diameter 28 — Low Backlash

<Figure 1>

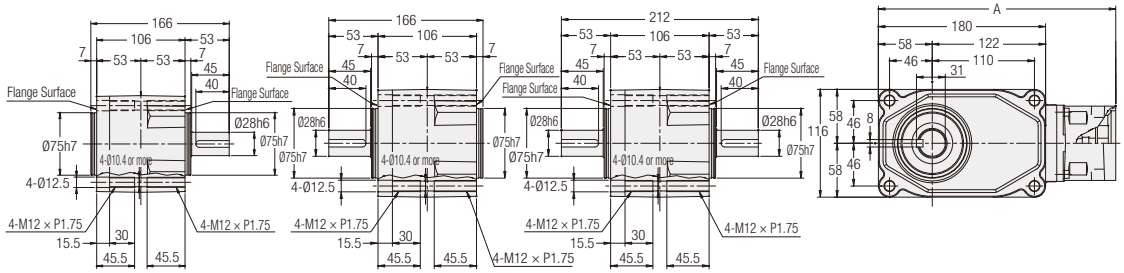

<Figure 2>

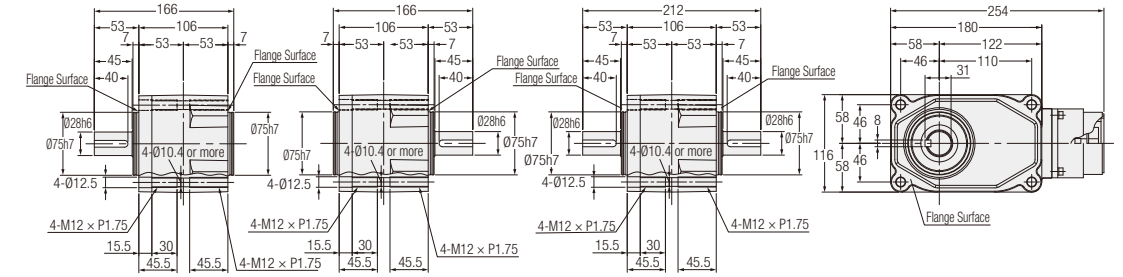

<Figure 3>

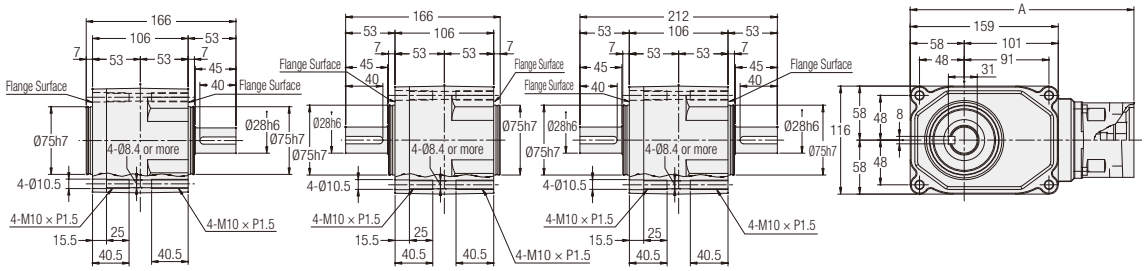

<Figure 4>

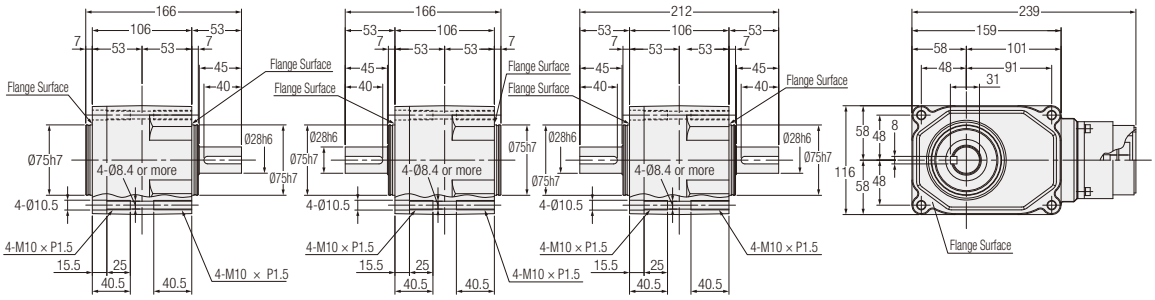

L Shaft R Shaft T Shaft

Motor Power Class	Part Number	Reduction Ratio	Figure Number	Flange Type	Approx. Weight (kg)	A
200 W	AF3FZ28#-∗∗∗□200△	80, 100, 120, 160, 200, 240	1	F1/F2/F3/S1/S2/S3	8.5	255.5
200 W	AF3FZ28#-∗∗∗□200△	80, 100, 120, 160, 200, 240	1	S6	8.5	251
200 W	AF3FZ28#-∗∗∗□200△	80, 100, 120, 160, 200, 240	2	S7	8.5	—
400 W	AF3FZ28#-∗∗∗□400△	5, 7.5, 10, 12, 15, 20, 25, 30, 40, 50, 60	3	F1/F3/S1/S3	8.5	240.5
400 W	AF3FZ28#-∗∗∗□400△	5, 7.5, 10, 12, 15, 20, 25, 30, 40, 50, 60	3	S6	8.5	236
400 W	AF3FZ28#-∗∗∗□400△	5, 7.5, 10, 12, 15, 20, 25, 30, 40, 50, 60	4	S7	8.5	—

Note: A shaft arrangement (L, R, T) will be indicated as # in the nomenclature. In addition, a reduction ratio will be indicated as ∗∗∗, backlash will be indicated as □, and a flange type will be indicated as △.
Note: Please refer to pages 912 to 918 for the detailed dimensions of the input shaft area.
Note: Please refer to page 868 for the performance table.

AF3F Type Concentric Right Angle Shaft — Shaft Diameter 32 — Low Backlash

<Figure 1>

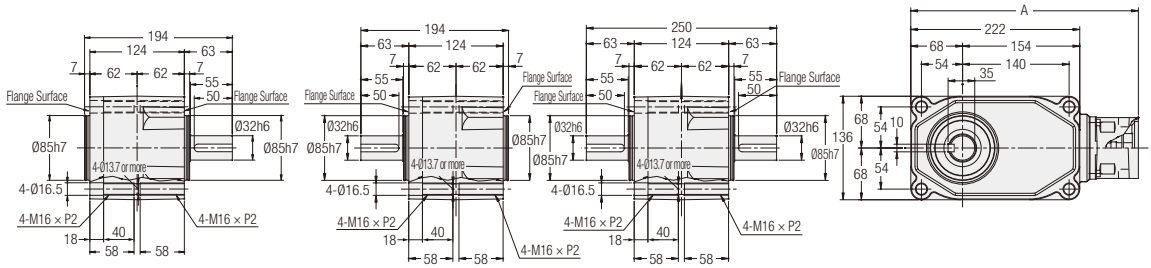

<Figure 2>

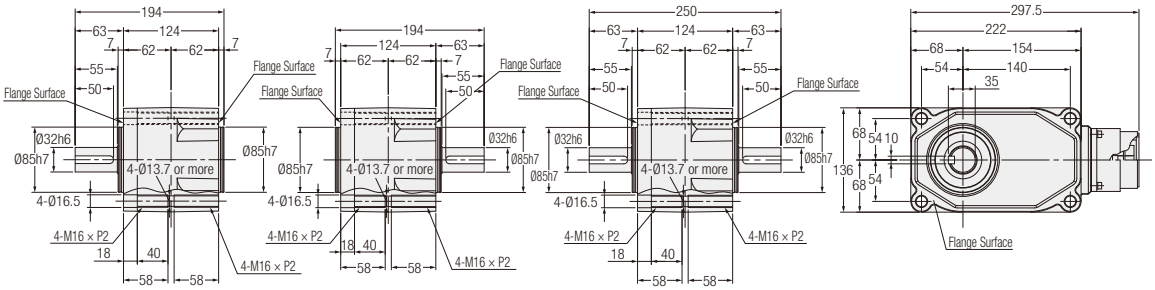

Motor Power Class	Part Number	Reduction Ratio	Figure Number	Flange Type	Approx. Weight (kg)	A
400 W	AF3FZ32#-∗∗∗□400△	80, 100, 120, 160, 200, 240	1	F1/F3/S1/S3	14.5	299
400 W	AF3FZ32#-∗∗∗□400△	80, 100, 120, 160, 200, 240	1	S6	14.5	294.5
400 W	AF3FZ32#-∗∗∗□400△	80, 100, 120, 160, 200, 240	2	S7	14.5	—

Note: A shaft arrangement (L, R, T) will be indicated as # in the nomenclature. In addition, a reduction ratio will be indicated as ∗∗∗, backlash will be indicated as □, and a flange type will be indicated as △.
Note: Please refer to pages 912 to 918 for the detailed dimensions of the input shaft area.
Note: Please refer to page 868 for the performance table.

<Figure 3>

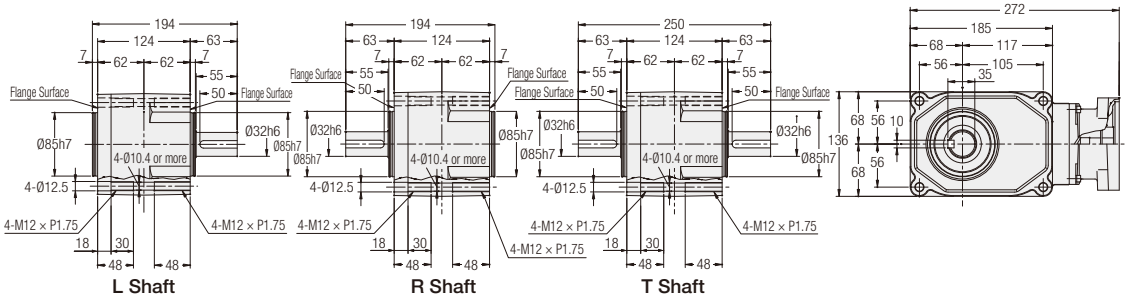

<Figure 4>

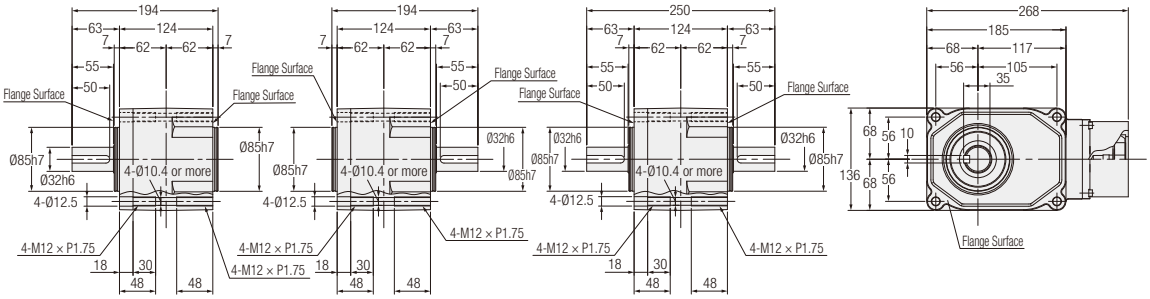

<Figure 5>

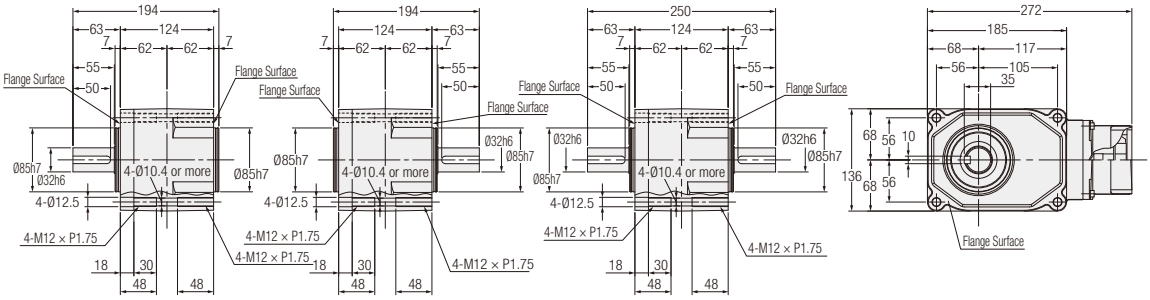

Motor Power Class	Part Number	Reduction Ratio	Figure Number	Flange Type	Approx. Weight (kg)
750 W	AF3FZ32#-∗∗∗□750△	5, 7.5, 10, 12, 15, 20, 25, 30, 40, 50, 60	3	F1/F2/S1/S2/S3/S4	11.5
750 W	AF3FZ32#-∗∗∗□750△	5, 7.5, 10, 12, 15, 20, 25, 30, 40, 50, 60	4	SA	11.5
750 W	AF3FZ32#-∗∗∗□750△	5, 7.5, 10, 12, 15, 20, 25, 30, 40, 50, 60	5	S9	11.5

Note: A shaft arrangement (L, R, T) will be indicated as # in the nomenclature. In addition, a reduction ratio will be indicated as ∗∗∗, backlash will be indicated as □, and a flange type will be indicated as △.

Note: Please refer to pages 912 to 918 for the detailed dimensions of the input shaft area.

Note: Please refer to page 868 for the performance table.

AF3F Type Concentric Right Angle Shaft — Shaft Diameter 40 — Low Backlash

<Figure 1>

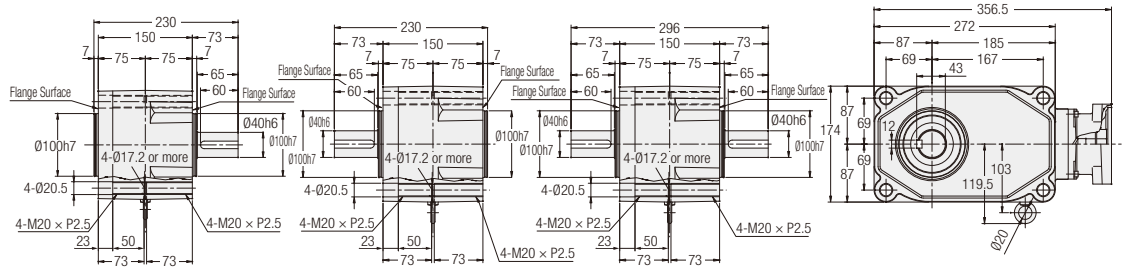

<Figure 2>

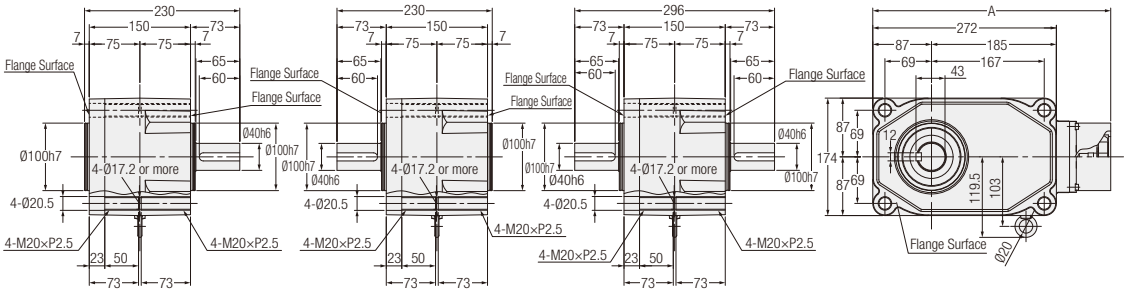

<Figure 3>

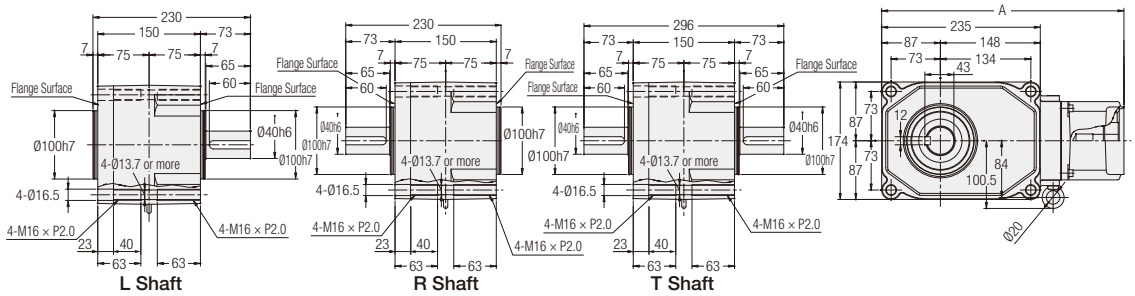

L Shaft R Shaft T Shaft

Motor Power Class	Part Number	Reduction Ratio	Figure Number	Flange Type	Approx. Weight (kg)	A
750 W	AF3FZ40#-∗∗∗□750△	80, 100, 120, 160, 200, 240	1	F1/F2/S1/S2/S3/S4	20	—
750 W	AF3FZ40#-∗∗∗□750△	80, 100, 120, 160, 200, 240	2	SA	20	352.5
750 W	AF3FZ40#-∗∗∗□750△	80, 100, 120, 160, 200, 240	2	S9	20	356.5
2000 W	AF3FZ40#-∗∗∗□2000△	5, 7.5, 10, 12, 15, 20, 25, 30, 40, 50, 60	3	K21/K22/K23/K31/ K32/K33/K43	21	359
				F31/F33	21	369

Note: A shaft arrangement (L, R, T) will be indicated as # in the nomenclature. In addition, a reduction ratio will be indicated as ∗∗∗, backlash will be indicated as □, and a flange type will be indicated as △.
Note: Please refer to pages 912 to 918 for the detailed dimensions of the input shaft area.
Note: Please refer to page 868 for the performance table.

MEMO

Technical Documentation

HIGH PRECISION GEARBOXES FOR SERVO MOTORS

P.886 **Motor mounting procedure**

P.891 **Examples of Tightening**

P.892 **Detailed Diagrams of Input Shaft and Flange Shapes**

P.920 **Performance Tables [for Calculation and Selection]**

P.939 **Selection Process Steps and Examples**

P.941 **Service Factor / Allowable Moment of Inertia**

P.943 **Method for Calculating the Moment of Inertia**

P.944 **Overhung Load (O.H.L.)**

P.948 **Continuous Rated Input Torque of Gearboxes**

P.949 **Change of Position of Wrench Hole for Input Shaft Joint Tightening**

P.950 **Precautions for Installation**

Motor mounting procedure

APG Type

Step 1. Turn the input shaft and align the clamping bolt head to the wrench hole for clamping bolt.

Step 2. Wipe with rust-preventive agent, oil, etc. off the internal surface of the input shaft and the output.

Step 3. Insert the motor shaft.

When a bush is provided, align the position of the slit of the bushing with that of of the input tightening portion as shown in the following figure.

Additionally, when a key groove is provided, align the position of the slit of the bushing with the key groove.
When using an IP65 gearbox, insert a sheet gasket (accessory) between the input flange and the motor before inserting the motor into the gearbox body.

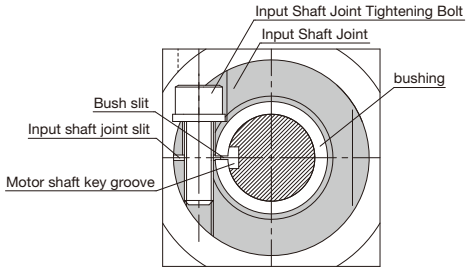

Step 4. Fasten the motor and the flange part of the gearbox with a motor mounting bolt.
Refer to [Table 1] for the tightening torque value.

Step 5. Tighten the input shaft joint tightening bolt to the specified tightening torque.
Refer to [Table 2] for the tightening torque value.

Step 6. Mount the rubber cap (accessory) to the wrench hole.

■ Tightening Torque for Motor Mounting Tightening Bolts (reference values)

[Table-1]

Tightening Bolt Size	M3	M4	M5	M6	M8
Tightening Torque (N·m)	1.6	4.4	8.3	14.2	29.4
Strength classifications (JIS B 1051)	10.9	10.9	10.9	10.9	10.9

■ Tightening Torque for Input Shat Joint Tightening Bolts (reference values)

[Table-2]

Power Class	100 W	150 W	200 W	400 W	600 W	750 W	1000 W	1500 W	2000 W	3000 W
Tightening Bolt Size	M4	M4	M4	M4	M4	M5	M8	M8	M8	M8
Tightening Torque (N·m)	5.1	5.1	5.1	5.1	5.1	9	35	35	35	35

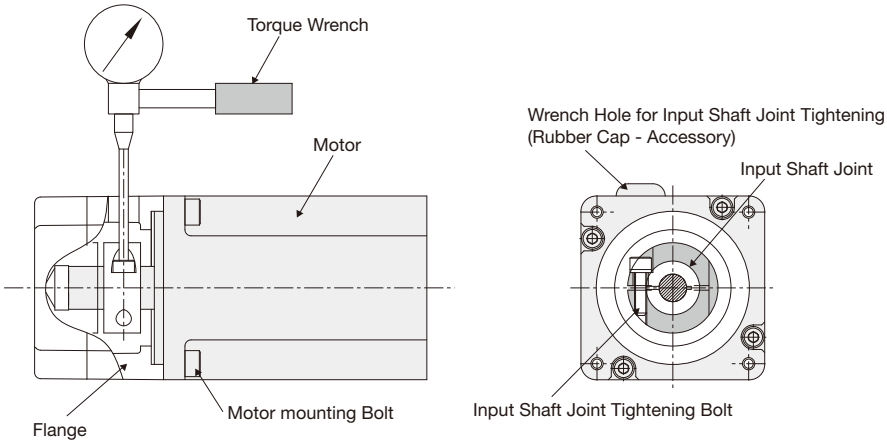

Note 1: Do not tighten the tightening bolt with no shaft applicable to the flange type inserted in the input shaft joint.
This may cause damage to the input shaft.

Motor mounting procedure

■ Detailed Diagram of Wrench Hole for Input Shaft Joint Tightening

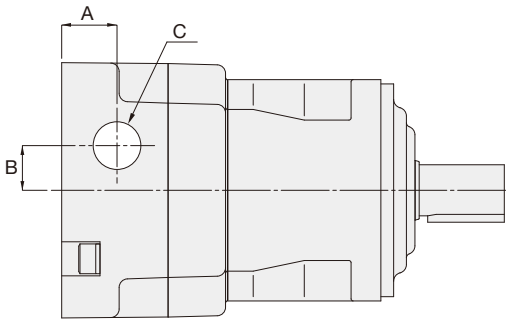

Power Class		Dimension A	Dimension B	Dimension C
100 W	Flange Type Code S1, S3	13	9	Ø10
	Flange Type Code S6	13	10.5	Ø10
150 W		13	9	Ø10
200 W		13	10.5	Ø10
400 W		13	10.5	Ø10
600 W		13	10.5	Ø10
750 W	Flange Type Code S1, S2, S3, S4, S8, S9	14.5	15	Ø10
	Flange Type Code S6	15	15	Ø10
	Flange Type Code F6, F7	20	15	Ø10
1000 W	Flange Type Code K1*, K2*, K9*	20	20	Ø12
	Flange Type Code K3*	25	20	Ø12
	Flange Type Code K6*, K8*	21	20	Ø12
	Flange Type Code F3*	29	20	Ø12
1500 W	Flange Type Code K1*, K2*, K9*, KA*	20	20	Ø12
	Flange Type Code K3*	25	20	Ø12
	Flange Type Code K6*	21	20	Ø12
	Flange Type Code F3*	29	20	Ø12
2000 W	Flange Type Code K1*, K2*, K9*	20	20	Ø12
	Flange Type Code K3*	25	20	Ø12
	Flange Type Code K6*	21	20	Ø12
	Flange Type Code F3*	29	20	Ø12
3000 W	Flange Type Code K1*, K2*	20	20	Ø12
	Flange Type Code K3*, KB*	25	20	Ø12
	Flange Type Code K6*	21	20	Ø12
	Flange Type Code F3*	29	20	Ø12

■ IP65 Specification Motor Assembly Procedure

When using an IP65 gearbox, insert a sheet gasket between the input flange and the motor before inserting the motor into the gearbox body.

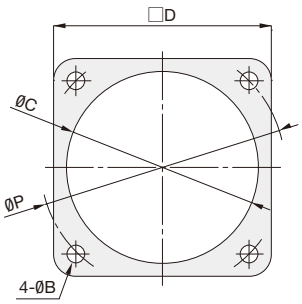

●Dimensions of Sheet gasket for Input Flange Area

Sheet Gasket	ØDimension B	ØDimension C	□ Dimension D	ØDimension P
□40	Ø4.5	Ø30.5	□40	Ø46
□55	Ø5.5	Ø40.5	□55	Ø63
□60	Ø5.5	Ø50.5	□60	Ø70
□70	Ø5.5	Ø60.5	□70	Ø75
□80	Ø6.5	Ø70.5	□80	Ø90
□90	Ø6.5	Ø80.5	□90	Ø100
□100	Ø9	Ø95.5	□100	Ø115
□120	Ø9	Ø110.5	□120	Ø130
□130	Ø9	Ø110.5	□130	Ø145

AFC Type

Step 1. Turn the input shaft and align the clamping bolt head to the wrench hole for clamping bolt.

Step 2. Wipe with rust-preventive agent, oil, etc. off the internal surface of the input shaft and the output.

Step 3. Insert the motor shaft.

Step 4. Fasten the motor and the flange part of the gearbox with a motor mounting bolt.
Refer to [Table 1] for the tightening torque value.

Step 5. Tighten the input shaft joint tightening bolt to the specified tightening torque.
Refer to [Table 2] for the tightening torque value.

Step 6. Mount the rubber cap (accessory) to the wrench hole.

■ Tightening Torque for Motor Mounting Tightening Bolts (reference values)

[Table-1]

Tightening Bolt Size	M3	M4	M5	M6	M8
Tightening Torque (N·m)	1.6	4.4	8.3	14.2	29.4
Strength classifications (JIS B 1051)	10.9	10.9	10.9	10.9	10.9

■ Tightening Torque for Input Shat Joint Tightening Bolts (reference values)

[Table-2]

Power Class	100 W	200 W	400 W	750 W	1000 W	2000 W	3000 W
Tightening Bolt Size	M4	M4	M4	M5	M8	M8	M8
Tightening Torque (N·m)	5.1	5.1	5.1	9	35	35	35

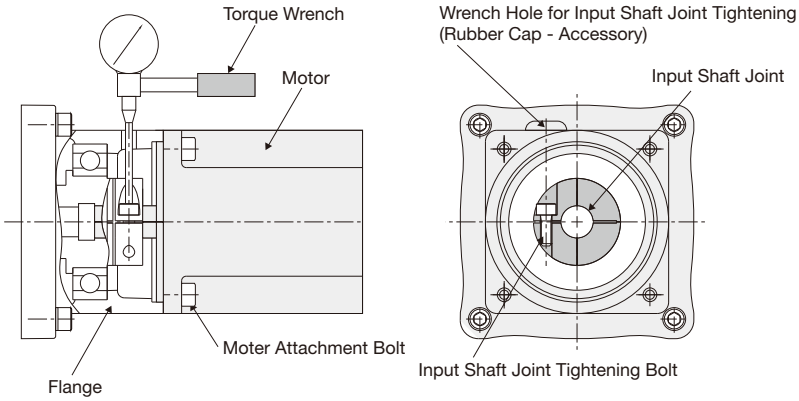

Note 1: Do not tighten the tightening bolt with no shaft applicable to the flange type inserted in the input shaft joint.
This may cause damage to the input shaft.

Motor mounting procedure

■ Detailed Diagram of Wrench Hole for Input Shaft Joint Tightening

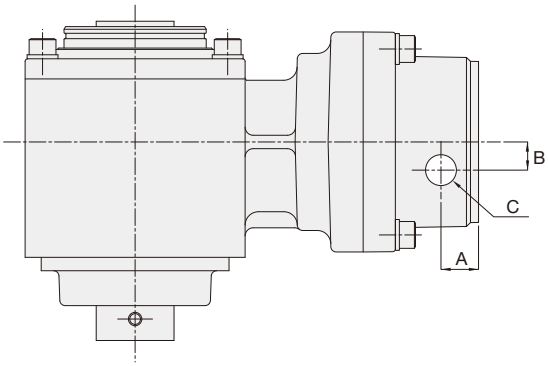

* For the position of the wrench hole for input shaft joint tightening, refer to page 949.

Power Class	Flange Type	Frame Size	Reduction Ratio	Dimension A	Dimension B	Dimension C
100 W	S1/S3	All	All	12	8	Ø11.5
	S6	10/15	3, 5, 10 to 30	11	8	Ø11.5
		12/18	7.5, 10, 40 to 50	13	8	Ø11.5
200 W	S1 to S3	All	All	14	10.5	Ø11.5
	S6	All	All	10	10.5	Ø11.5
	S7	All	All	13	10.5	Ø11.5
400 W	S1/S3	All	All	14	10.5	Ø11.5
	S6	All	All	10	10.5	Ø11.5
	S7	All	All	13	10.5	Ø11.5
750 W	S1 to S4	All	All	14	15	Ø11.5
	SA	All	All	12	15	Ø11.5
	S9	18/28	3, 5, 10 to 30	15	15	Ø11.5
		22/32	7.5, 10, 40 to 50	13.9	15	Ø11.5
1000 W	K13/K22/K23/K61/KC9	All	All	18.5	20	Ø11.5
2000 W	Other than K75	All	All	18.5	20	Ø11.5
	K75	All	All	18.5	24.5	Ø11.5
3000 W	Other than K75	All	All	18.5	20	Ø11.5
	K75	All	All	18.5	24.5	Ø11.5

AG3/AH2/AF3 Types

Step 1. Turn the input shaft and align the clamping bolt head to the wrench hole for clamping bolt.

Step 2. Wipe with rust-preventive agent, oil, etc. off the internal surface of the input shaft and the output.

Step 3. Insert the motor shaft.

Step 4. Fasten the motor and the flange part of the gearbox with a motor mounting bolt.
Refer to [Table 1] for the tightening torque value.

Step 5. Tighten the input shaft joint tightening bolt to the specified tightening torque.
Refer to [Table 2] for the tightening torque value.

Step 6. Mount the cap screw (accessory) to the wrench hole.

■ Tightening Torque for Motor Mounting Tightening Bolts (reference values)

[Table-1]

Tightening Bolt Size	M3	M4	M5	M6	M8
Tightening Torque (N·m)	1.6	4.4	8.3	14.2	29.4
Strength classifications (JIS B 1051)	10.9	10.9	10.9	10.9	10.9

■ Tightening Torque for Input Shat Joint Tightening Bolts (reference values)

[Table-2]

Power Class	100 W	200 W	400 W	750 W	1000 W	2000 W
Tightening Bolt Size	M5	M5	M5	M6	M8	M8
Tightening Torque (N·m)	8.33	8.33	8.33	12.74	29.40	29.40

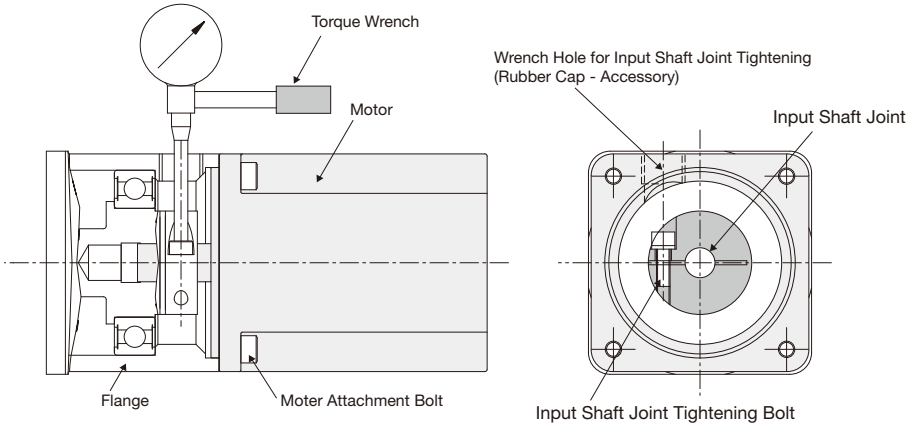

Note 1: Do not tighten the tightening bolt with no shaft applicable to the flange type inserted in the input shaft joint.
This may cause damage to the input shaft.

■ Detailed Diagram of Wrench Hole for Input Shaft Joint Tightening

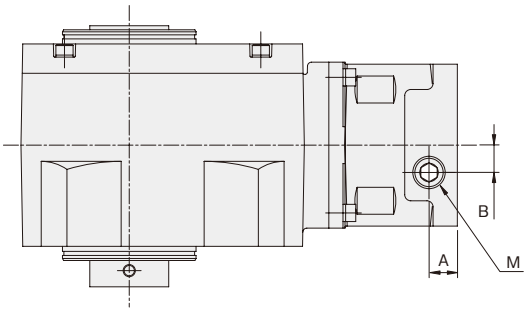

* For the position of the wrench hole for input shaft joint tightening, refer to page 912.

Power Class		Dimension A		Dimension B	Dimension M	
		AF3	AH2/ AG3/ AGA		AF3	AH2/ AG3/ AGA
100 W (Only precision 1 arc min and 3 arc min specifications)		14	14	10	M8	M8
100 W (Only low backlash specifications)		14	14.5	10	M16	M8
200 W		14	14.5	13.5	M16	M8
400 W		14	14.5	13.5	M16	M8
750 W		15	15	16	M16	M10
1000 W		19	19	20	M16	M12
2000 W	Flange Type Code K21/K22/K23 K31/K32/K33	18.5	17	20	M16	M12
2000 W	Flange Type Code F31/F33	28.5	27	20	M16	M12

Examples of Tightening

In the case of a right angle hollow bore type

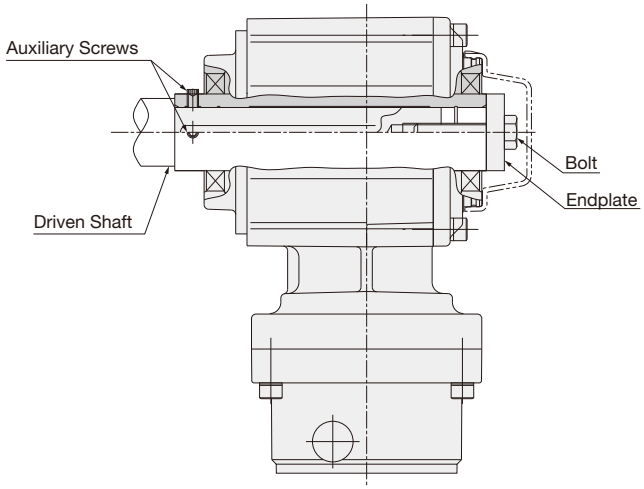

Note 1: This method prevents backlash by inserting a stepped driven shaft with a key into the right angle hollow bore and fixing the shaft on the end face with a screw etc. and then with the two auxiliary screws.

In the case of parallel shaft and right angle shaft types without a key

■ Item to be installed on a shaft
(Tightening with a ball screw etc.)

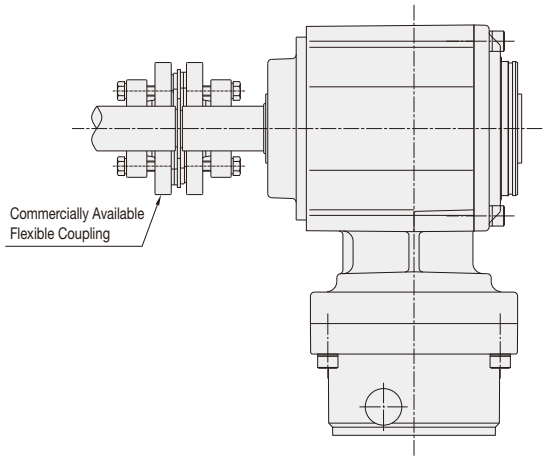

■ Item to be installed in a hole
(Tightening with a pulley etc.)

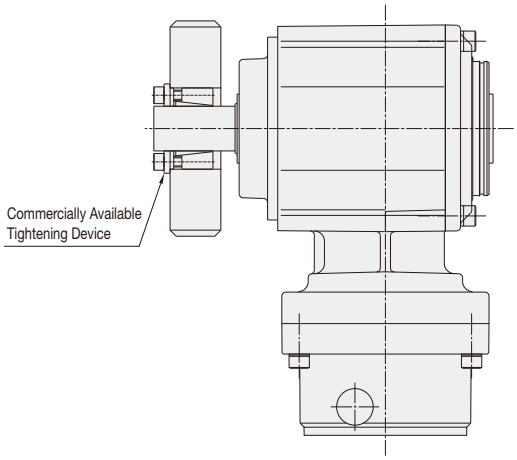

* The figure shows a solid shaft (without a key). The same applies for parallel shafts.
* For solid shafts (without a key), use a friction-type coupling.
* Follow the instruction manual of the commercially available fastening device for the fastening procedure.

Detailed Diagrams of Input Shaft and Flange Shapes

APG Type

■ 100 W Class S1/S3

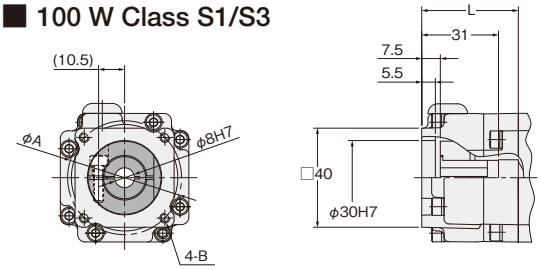

Flange Type	Reduction Ratio	Dimension L	Dimension A	Dimension B	Bushing
S1	Up to 1/10	39	Ø46	M4, Depth 10	Yes
	From 1/15	34.5			
S3	Up to 1/10	39	Ø45	M3, Depth 10	Yes
	From 1/15	34.5			

■ 100 W Class S6

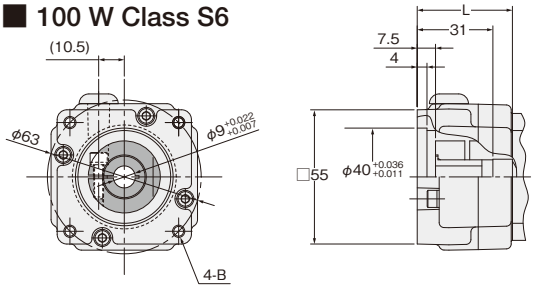

Flange Type	Reduction Ratio	Dimension L	Dimension B	Bushing
S6	Up to 1/10	39	M5, Depth 10	Yes
	From 1/15	34.5		

■ 150 W Class S1

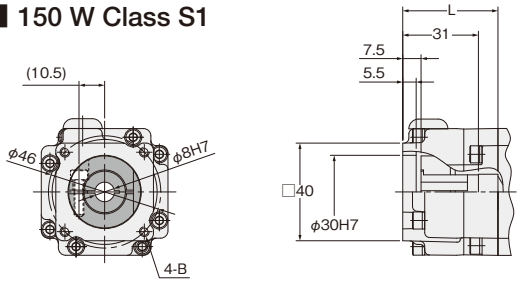

Flange Type	Reduction Ratio	Dimension L	Dimension B	Bushing
S1	Up to 1/10	39	M4, Depth 10	Yes
	From 1/15	34.5		

■ 200 W Class S1/S2/S3/S5

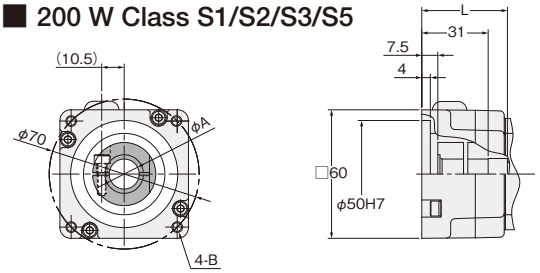

Flange Type	Reduction Ratio	Dimension L	Dimension A	Dimension B	Bushing
S1	Up to 1/10	39	Ø11H7	M5, Depth 13.5 (Through)	Yes
	From 1/15	34.5			
S2	Up to 1/10	39	Ø14H7	M5, Depth 13.5 (Through)	No
	From 1/15	34.5			
S3	Up to 1/10	39	Ø11H7	M4, Depth 13.5 (Through)	Yes
	From 1/15	34.5			
S5	Up to 1/10	39	Ø9H7	M5, Depth 13.5 (Through)	Yes
	From 1/15	34.5			

■ 200 W Class S6

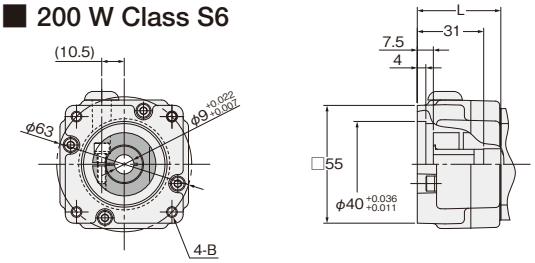

Flange Type	Reduction Ratio	Dimension L	Dimension B	Bushing
S6	Up to 1/10	39	M5, Depth 10	Yes
	From 1/15	34.5		

Detailed Diagrams of Input Shaft and Flange Shapes

■ 200 W Class S7

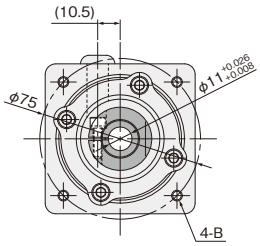

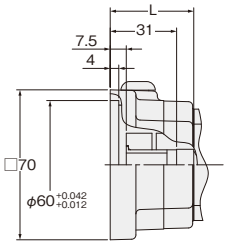

Flange Type	Reduction Ratio	Dimension L	Dimension B	Bushing
S7	Up to 1/10	39	M5, Depth 12 (Through)	Yes
	From 1/15	34.5		

■ 400 W Class S1/S3

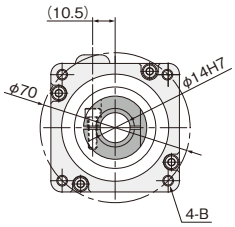

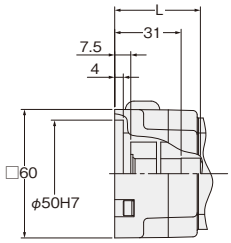

Flange Type	Reduction Ratio	Dimension L	Dimension B	Bushing
S1	Up to 1/5	39	M5, Depth 13.5 (Through)	No
	From 1/15	34.5	M5, Depth 13.5 (Through)	
S3	Up to 1/5	39	M4, Depth 13.5 (Through)	No
	From 1/15	34.5	M4, Depth 13.5 (Through)	

■ 400 W Class S6

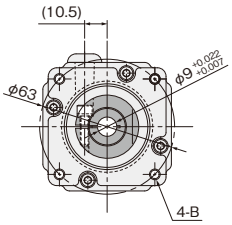

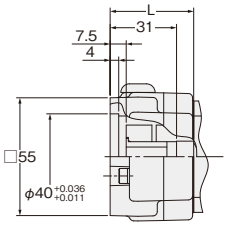

Flange Type	Reduction Ratio	Dimension L	Dimension B	Bushing
S6	Up to 1/10	39	M5, Depth 10	Yes
	From 1/15	34.5		

■ 400 W Class S7

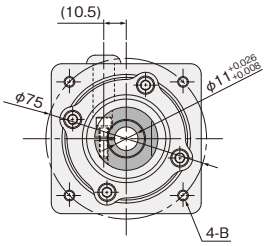

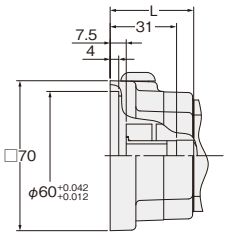

Flange Type	Reduction Ratio	Dimension L	Dimension B	Bushing
S7	Up to 1/10	39	M5, Depth 12(Through)	Yes
	From 1/15	34.5		

■ 600 W Class S1

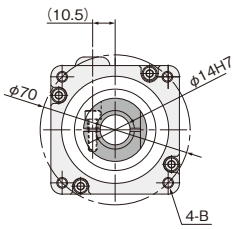

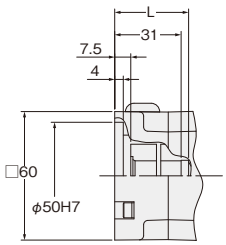

Flange Type	Reduction Ratio	Dimension L	Dimension B	Bushing
S1	Up to 1/10	39	M5, Depth 10	No
	From 1/15	34.5	M5, Depth 13.5 (Through)	

■ 750 W Class S1/S2/S3/S4

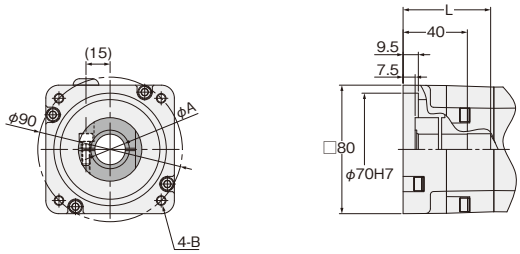

Flange Type	Reduction Ratio	Dimension L	Dimension A	Dimension B	Bushing
S1	Up to 1/10	54.5	Ø16H7	M6, Depth 17 (Through)	Yes
	From 1/15	44.5			
S2	Up to 1/10	54.5	Ø19H7	M6, Depth 17 (Through)	No
	From 1/15	44.5			
S3	Up to 1/10	54.5	Ø19H7	M5, Depth 17 (Through)	No
	From 1/15	44.5			
S4	Up to 1/10	54.5	Ø16H7	M5, Depth 17 (Through)	Yes
	From 1/15	44.5			

■ 750 W Class S6

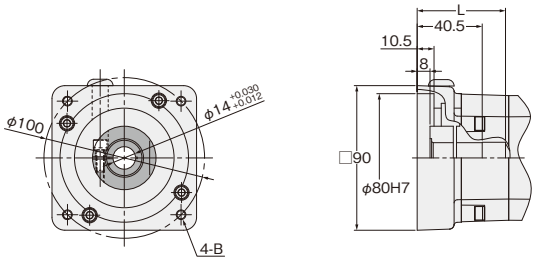

Flange Type	Reduction Ratio	Dimension L	Dimension B	Bushing
S6	Up to 1/10	54.5	M6, Depth 15 (Through)	Yes
	From 1/15	44.5		

■ 750 W Class S8

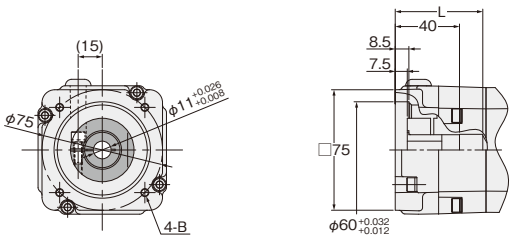

Flange Type	Reduction Ratio	Dimension L	Dimension B	Bushing
S8	Up to 1/10	55	M5, Depth 11	Yes
	From 1/15	45		

■ 750 W Class S9

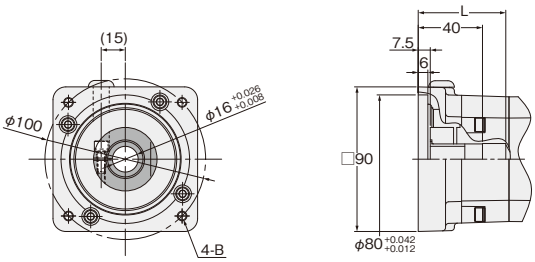

Flange Type	Reduction Ratio	Dimension L	Dimension B	Bushing
S9	Up to 1/10	54.5	M6, Depth 17 (Through)	Yes
	From 1/15	44.5		

Detailed Diagrams of Input Shaft and Flange Shapes

■ 750 W Class F6/F7

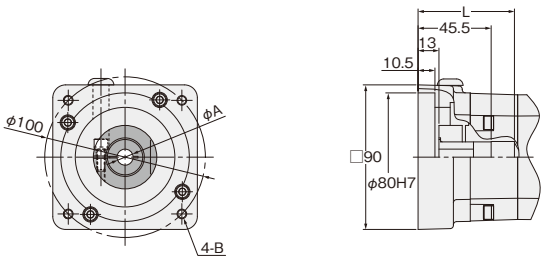

Flange Type	Reduction Ratio	Dimension L	Dimension A	Dimension B	Bushing
F6	Up to 1/10	60	Ø10H7	M6, Depth 15 (Through)	Yes
	From 1/15	50			
F7	Up to 1/10	60	Ø16H7		Yes
	From 1/15	50			

■ 1000 W Class K13/K21/K22/K23

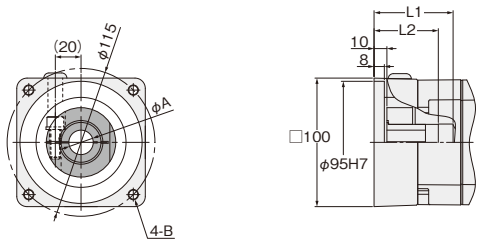

Flange Type	Reduction Ratio	Dimension L1	Dimension L2	Dimension A	Dimension B	Bushing
K13	Up to 1/10	61	50	Ø24H7	M6, Depth 15	Yes
	From 1/15	59	41			
K21	Up to 1/10	61	50	Ø19H7	M8, Depth 16	Yes
	From 1/15	59	41			
K22	Up to 1/10	61	50	Ø22H7	M8, Depth 16	Yes
	From 1/15	59	41			
K23	Up to 1/10	61	50	Ø24H7	M8, Depth 16	Yes
	From 1/15	59	41			

■ 1000 W Class K33

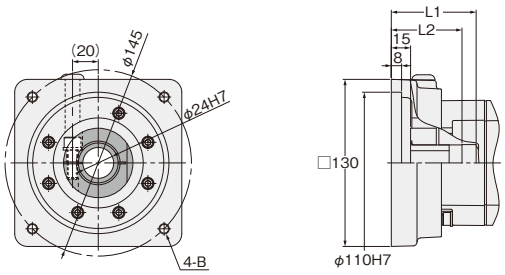

Flange Type	Reduction Ratio	Dimension L1	Dimension L2	Dimension B	Bushing
K33	Up to 1/10	66	55	M8, Depth 20 (Through)	Yes
	From 1/15	64	46		

■ 1000 W Class K61/K67/K6E

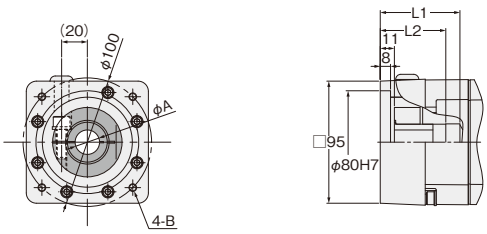

Flange Type	Reduction Ratio	Dimension L1	Dimension L2	Dimension A	Dimension B	Bushing
K61	Up to 1/10	62	51	Ø19H7	M6, Depth 15	Yes
	From 1/15	60	42			
K67	Up to 1/10	62	51	Ø16H7		Yes
	From 1/15	60	42			
K6E	Up to 1/10	62	51	$Ø14^{+0.030}_{+0.012}$		Yes
	From 1/15	60	42			

■ 1000 W Class K81

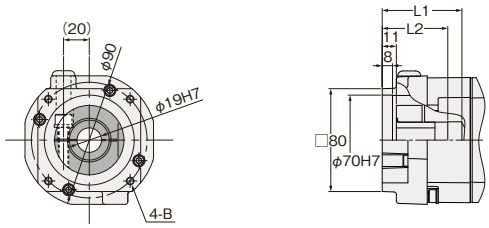

Flange Type	Reduction Ratio	Dimension L1	Dimension L2	Dimension B	Bushing
K81	Up to 1/10	62	51	M6, Depth 15	Yes
	From 1/15	60	42		

■ 1000 W Class K99

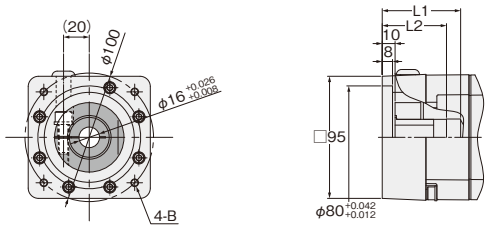

Flange Type	Reduction Ratio	Dimension L1	Dimension L2	Dimension B	Bushing
K99	Up to 1/10	61	50	M6, Depth 15	Yes
	From 1/15	59	41		

■ 1000 W Class F31

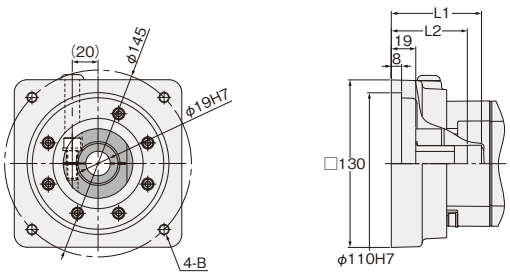

Flange Type	Reduction Ratio	Dimension L1	Dimension L2	Dimension B	Bushing
F31	Up to 1/10	70	59	M8, Depth 20 (Through)	Yes
	From 1/15	68	50		

■ 1500 W Class K13/K21/K22/K23

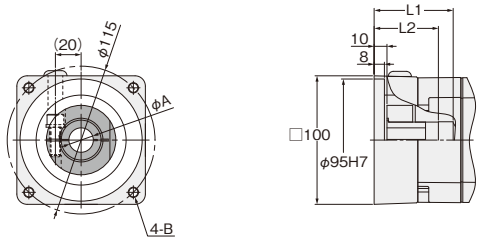

Flange Type	Reduction Ratio	Dimension L1	Dimension L2	Dimension A	Dimension B	Bushing
K13	Up to 1/10	61	50	Ø24H7	M6, Depth 15	Yes
	From 1/15	59	41			
K21	Up to 1/10	61	50	Ø19H7	M8, Depth 16	Yes
	From 1/15	59	41			
K22	Up to 1/10	61	50	Ø22H7	M8, Depth 16	Yes
	From 1/15	59	41			
K23	Up to 1/10	61	50	Ø24H7	M8, Depth 16	Yes
	From 1/15	59	41			

Detailed Diagrams of Input Shaft and Flange Shapes

■ 1500 W Class K31/K32/K33

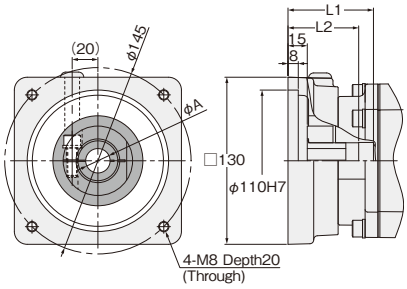

Flange Type	Reduction Ratio	Dimension L1	Dimension L2	Dimension A	Bushing
K31	Up to 1/10	66	55	Ø19H7	Yes
	From 1/15	64	46		
K32	Up to 1/10	66	55	Ø22H7	Yes
	From 1/15	64	46		
K33	Up to 1/10	66	55	Ø24H7	Yes
	From 1/15	64	46		

■ 1500 W Class K61/K67

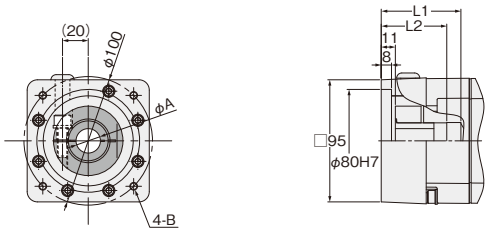

Flange Type	Reduction Ratio	Dimension L1	Dimension L2	Dimension A	Dimension B	Bushing
K61	Up to 1/10	62	51	Ø19H7	M6, Depth 15	Yes
	From 1/15	60	42			
K67	Up to 1/10	62	51	Ø16H7		Yes
	From 1/15	60	42			

■ 1500 W Class K99

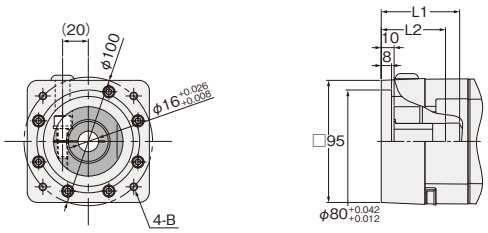

Flange Type	Reduction Ratio	Dimension L1	Dimension L2	Dimension B	Bushing
K99	Up to 1/10	61	50	M6, Depth 15	Yes
	From 1/15	59	41		

■ 1500 W Class KAA

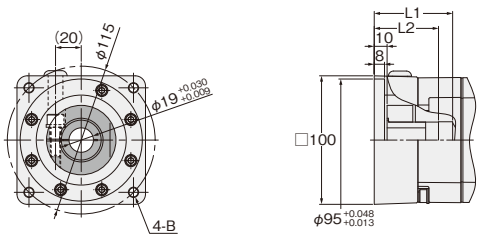

Flange Type	Reduction Ratio	Dimension L1	Dimension L2	Dimension B	Bushing
KAA	Up to 1/10	61	50	M8, Depth 16	Yes
	From 1/15	59	41		

■ 1500 W Class F31

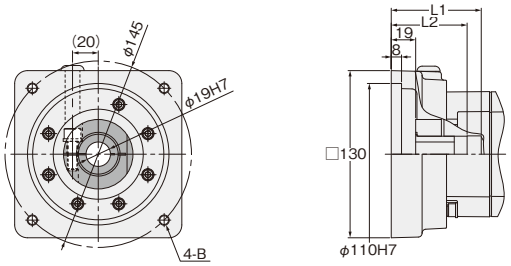

Flange Type	Reduction Ratio	Dimension L1	Dimension L2	Dimension B	Bushing
F31	Up to 1/10	70	59	M8, Depth 20 (Through)	Yes
	From 1/15	68	50		

■ 2000 W Class K13/K21/K22/K23

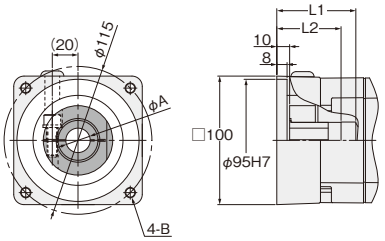

Flange Type	Reduction Ratio	Dimension L1	Dimension L2	Dimension A	Dimension B	Bushing
K13	Up to 1/10	61	50	Ø24H7	M6, Depth 15	Yes
	From 1/15	59	41			
K21	Up to 1/10	61	50	Ø19H7	M8, Depth 16	Yes
	From 1/15	59	41			
K22	Up to 1/10	61	50	Ø22H7	M8, Depth 16	Yes
	From 1/15	59	41			
K23	Up to 1/10	61	50	Ø24H7	M8, Depth 16	Yes
	From 1/15	59	41			

■ 2000 W Class K31/K32/K33

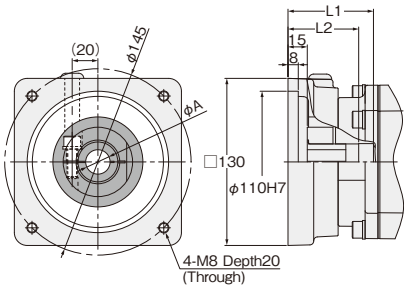

Flange Type	Reduction Ratio	Dimension L1	Dimension L2	Dimension A	Bushing
K31	Up to 1/10	66	55	Ø19H7	Yes
	From 1/15	64	46		
K32	Up to 1/10	66	55	Ø22H7	Yes
	From 1/15	64	46		
K33	Up to 1/10	66	55	Ø24H7	Yes
	From 1/15	64	46		

■ 2000 W Class K61/K67

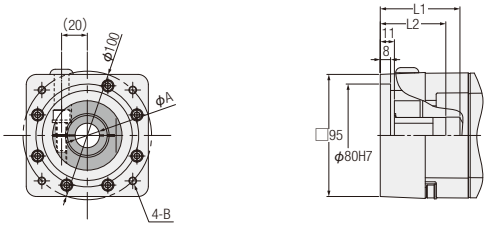

Flange Type	Reduction Ratio	Dimension L1	Dimension L2	Dimension A	Dimension B	Bushing
K61	Up to 1/10	62	51	Ø19H7	M6, Depth 15	Yes
	From 1/15	60	42			
K67	Up to 1/10	62	51	Ø16H7		Yes
	From 1/15	60	42			

Detailed Diagrams of Input Shaft and Flange Shapes

■ 2000 W Class KAA

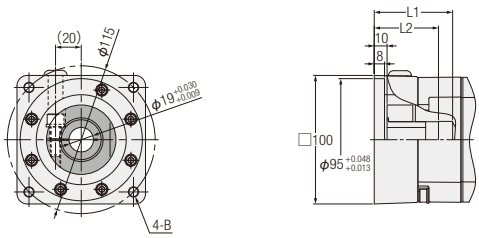

Flange Type	Reduction Ratio	Dimension L1	Dimension L2	Dimension B	Bushing
KAA	Up to 1/10	61	50	M8, Depth 16	Yes
	From 1/15	59	41		

■ 2000 W Class F31/F32/F33

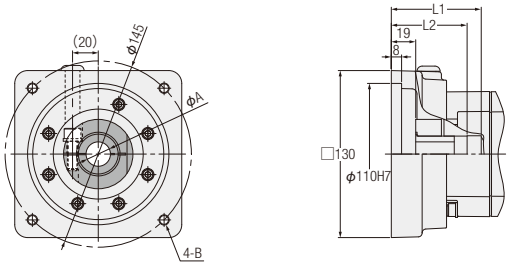

Flange Type	Reduction Ratio	Dimension L1	Dimension L2	Dimension A	Dimension B	Bushing
F31	Up to 1/10	70	59	Ø19H7	M8, Depth 20 (Through)	Yes
	From 1/15	68	50			
F32	Up to 1/10	70	59	Ø22H7		Yes
	From 1/15	68	50			
F33	Up to 1/10	70	59	Ø24H7		Yes
	From 1/15	68	50			

■ 3000 W Class K13/K21/K22/K23

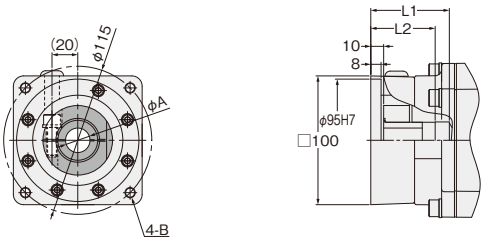

Flange Type	Reduction Ratio	Dimension L1	Dimension L2	Dimension A	Dimension B	Bushing
K13	Up to 1/10	61	50	Ø24H7	M6, Depth 15	Yes
K21	Up to 1/10	61	50	Ø19H7	M8, Depth 16	Yes
K22	Up to 1/10	61	50	Ø22H7	M8, Depth 16	Yes
K23	Up to 1/10	61	50	Ø24H7	M8, Depth 16	Yes

■ 3000 W Class K31/K32/K33/K34

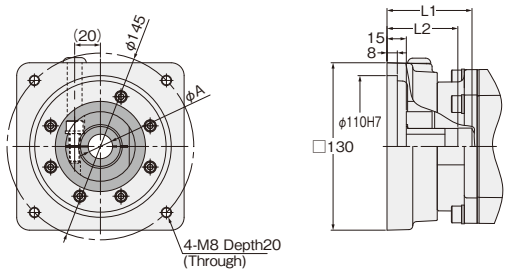

Flange Type	Reduction Ratio	Dimension L1	Dimension L2	Dimension A	Bushing
K31	Up to 1/10	66	55	Ø19H7	Yes
K32	Up to 1/10	66	55	Ø22H7	Yes
K33	Up to 1/10	66	55	Ø24H7	Yes
K34	Up to 1/10	66	55	Ø28H7	No

3000 W Class K61

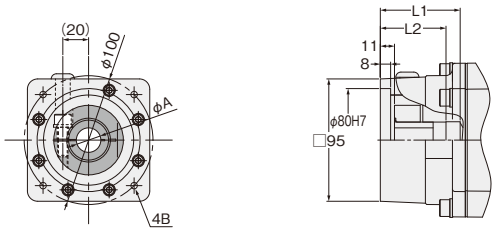

Flange Type	Reduction Ratio	Dimension L1	Dimension L2	Dimension B	Bushing
K61	Up to 1/10	62	51	M6, Depth 15	Yes

3000 W Class KBC

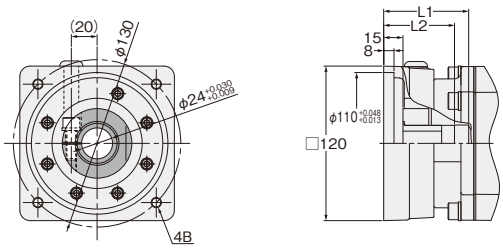

Flange Type	Reduction Ratio	Dimension L1	Dimension L2	Dimension B	Bushing
KBC	Up to 1/10	66	55	M8, Depth 20 (Through)	Yes

3000 W Class F31/F32/F33

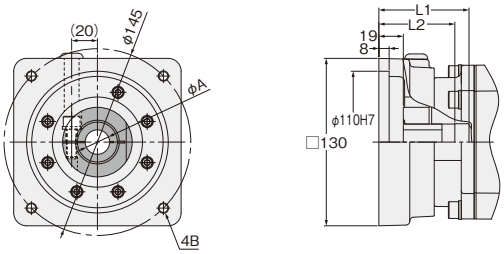

Flange Type	Reduction Ratio	Dimension L1	Dimension L2	Dimension A	Dimension B	Bushing
F31	Up to 1/10	70	59	Ø19H7	M8, Depth 20	Yes
F32	Up to 1/10	70	59	Ø22H7		Yes
F33	Up to 1/10	70	59	Ø24H7		Yes

Detailed Diagrams of Input Shaft and Flange Shapes

AG3·AGA·AH2 Type

■ 100 W Class (only low backlash specifications) F1/F3

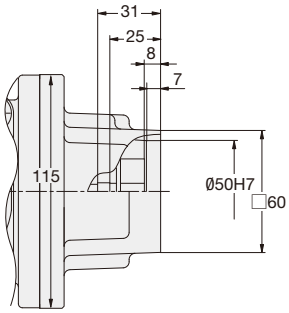

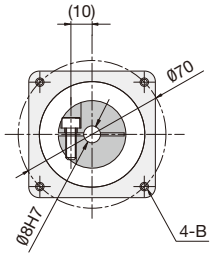

Flange Type	Dimension B
F1	M5, Depth 10
F3	M4, Depth 10

■ 100 W Class (only low backlash specifications) S1/S3

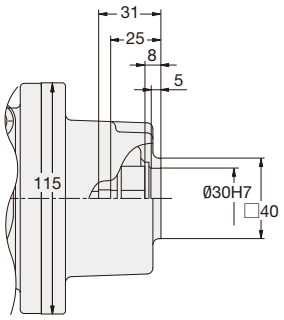

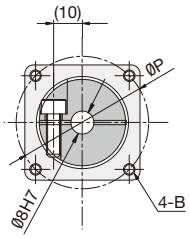

Flange Type	Dimension B	Dimension P
S1	M4, Depth 10	Ø46
S3	M3, Depth 10	Ø45

■ 200 W Class F1/F2/F3

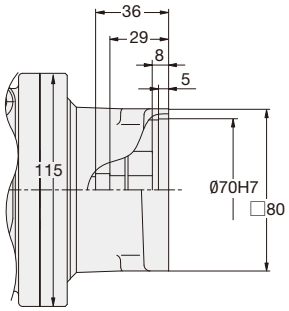

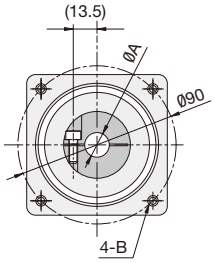

Flange Type	Dimension A	Dimension B
F1	Ø11H7	M6, Depth 12 (Through)
F2	Ø14H7	M6, Depth 12 (Through)
F3	Ø11H7	M5, Depth 12 (Through)

■ 200 W Class S1/S2/S3

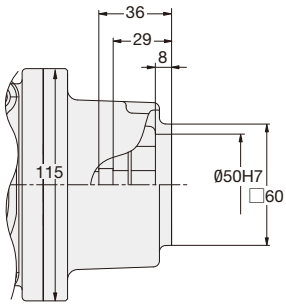

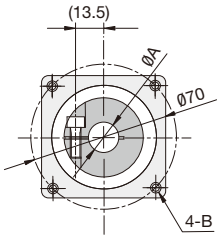

Flange Type	Dimension A	Dimension B
S1	Ø11H7	M5, Depth 10
S2	Ø14H7	M5, Depth 10
S3	Ø11H7	M4, Depth 10

■ 400 W Class F1/F3

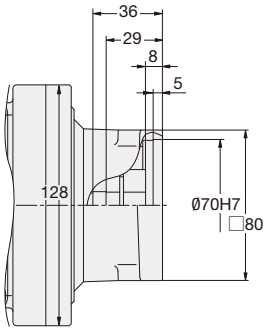

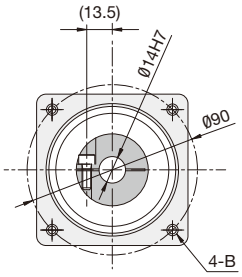

Flange Type	Dimension B
F1	M6, Depth 12 (Through)
F3	M5, Depth 12 (Through)

■ 400 W Class S1/S3

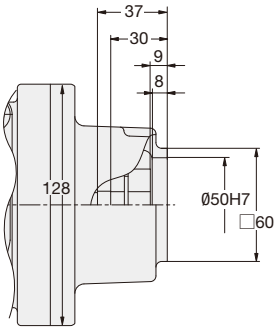

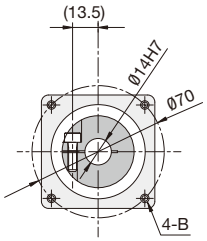

Flange Type	Dimension B
S1	M5, Depth 10
S3	M4, Depth 10

Detailed Diagrams of Input Shaft and Flange Shapes

■ 750 W Class F1/F2

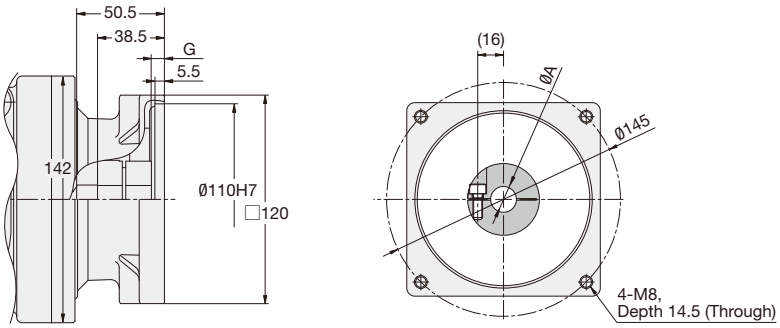

Type	Flange Type	Dimension A	Dimension G
AG3/AGA	F1	Ø16H7	7.5
	F2	Ø19H7	7.5
AH2	F1	Ø16H7	7.5
	F2	Ø19H7	7.5

■ 750 W Class S1/S2/S3/S4

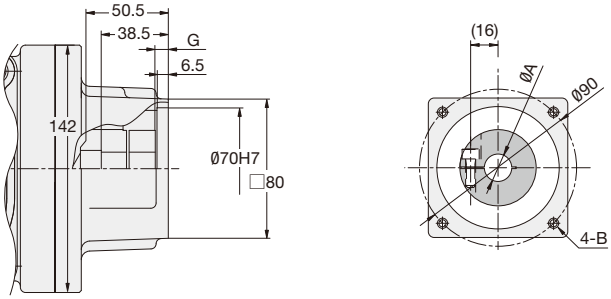

Type	Flange Type	Dimension A	Dimension B	Dimension G
AG3/AGA	S1	Ø16H7	M6, Depth 12	8.5
	S2	Ø19H7	M6, Depth 12	8.5
	S3	Ø19H7	M5, Depth 10	8.5
	S4	Ø16H7	M5, Depth 10	8.5
AH2	S1	Ø16H7	M6, Depth 12	7.5
	S2	Ø19H7	M6, Depth 12	7.5
	S3	Ø19H7	M5, Depth 10	7.5
	S4	Ø16H7	M5, Depth 10	7.5

■ 2000 W Class F31/F33

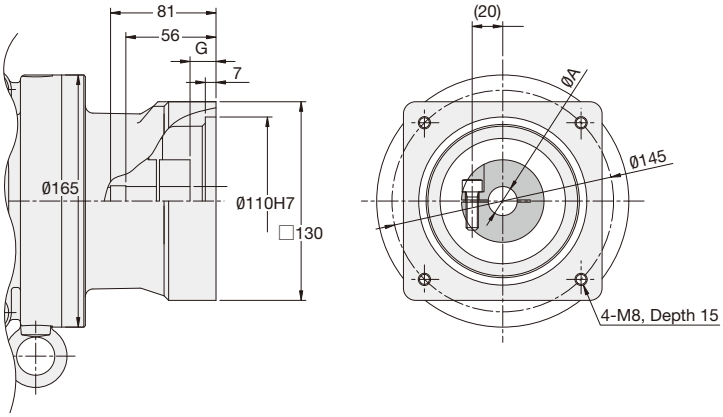

Type	Flange Type	Dimension A	Dimension G
AG3/AGA	F31	Ø19H7	18.5
	F33	Ø24H7	19.5
AH2	F31	Ø19H7	19.5
	F33	Ø24H7	19.5

■ 2000 W Class K21/K22/K23

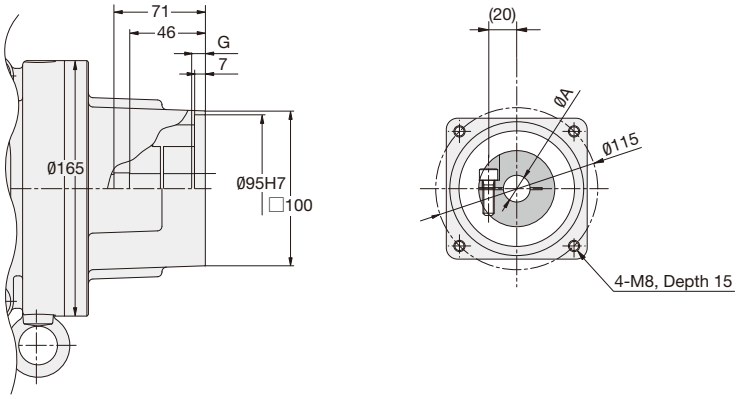

Type	Flange Type	Dimension A	Dimension G
AG3/ AGA	K21	Ø19H7	8.5
	K22	Ø22H7	8.5
	K23	Ø24H7	9.5
AH2	K21	Ø19H7	9.5
	K22	Ø22H7	9.5
	K23	Ø24H7	9.5

■ 2000 W Class K31/K32/K33

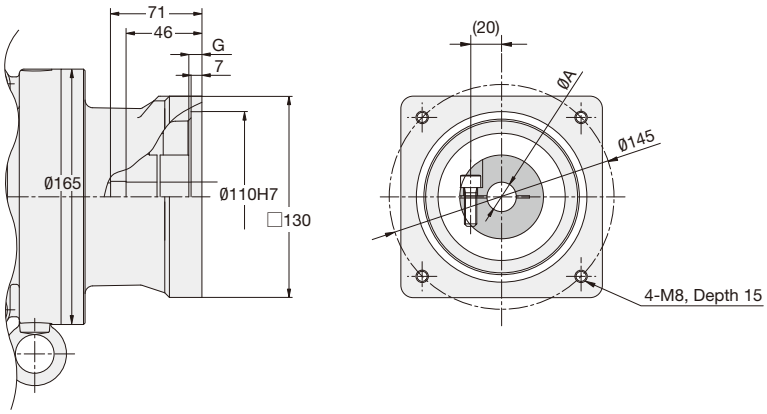

Type	Flange Type	Dimension A	Dimension G
AG3/ AGA	K31	Ø19H7	8.5
	K32	Ø22H7	8.5
	K33	Ø24H7	9.5
AH2	K31	Ø19H7	9.5
	K32	Ø22H7	9.5
	K33	Ø24H7	9.5

Detailed Diagrams of Input Shaft and Flange Shapes

AFC Type (Right Angle Hollow Bore/Right Angle Shaft) Backlash 3 arc min/30 arc min Specifications

■ 100 W Class S1/S3

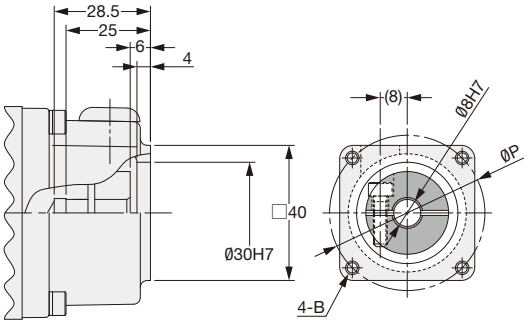

Flange Type	Dimension B	Dimension P
S1	M4, Depth 10	Ø46
S3	M3, Depth 10	Ø45

■ 100 W Class S6

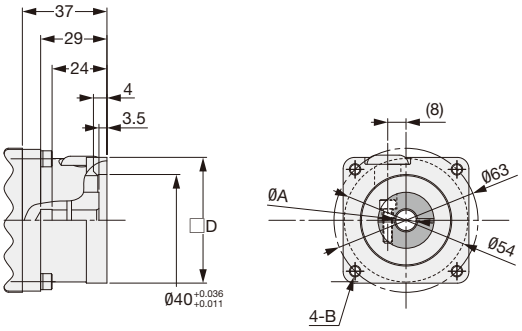

Flange Type	Frame Size	Dimension A	Dimension B	Dimension D
S6	12/18	Ø9 +0.022 +0.007	M5, Depth 8 (Through)	□55
	10/15	Ø9 +0.022 +0.007	M5, Depth 8 (Through)	□56

■ 200 W Class S1/S2/S3

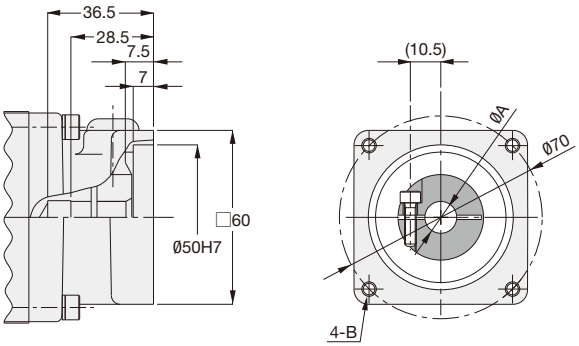

Flange Type	Frame Size	Dimension A	Dimension B
S1	12/18	Ø11 +0.018 +0.008	M5, Depth 10 (Through)
	15/22	Ø11H7	M5, Depth 15 (Through)
S2	12/18	Ø14H7	M5, Depth 10 (Through)
	15/22	Ø14H7	M5, Depth 15 (Through)
S3	12/18	Ø11 +0.018 +0.008	M4, Depth 10 (Through)
	15/22	Ø11H7	M4, Depth 15 (Through)

■ 200 W Class S6

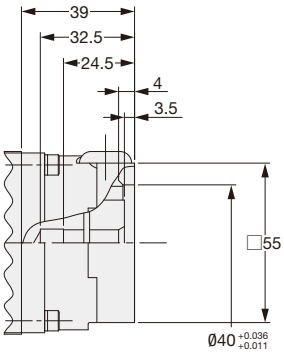

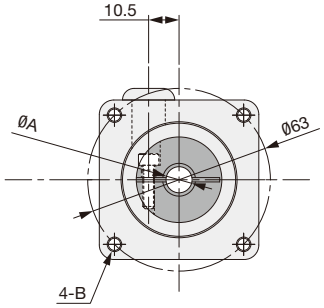

Flange Type	Frame Size	Dimension A	Dimension B
S6	12/18	Ø9 +0.022 +0.007	M5, Depth 10

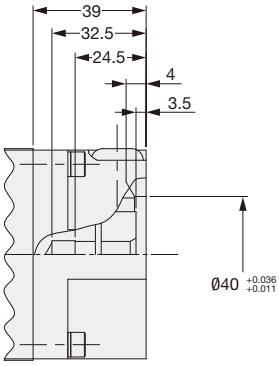

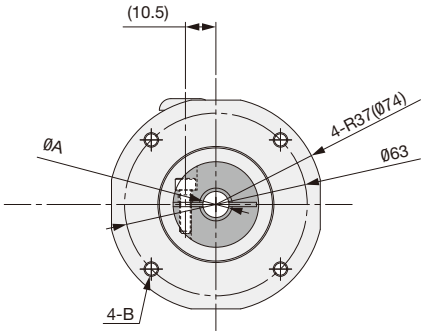

Flange Type	Frame Size	Dimension A	Dimension B
S6	15/22	Ø9 +0.022 +0.007	M5, Depth 10

■ 200 W Class S7

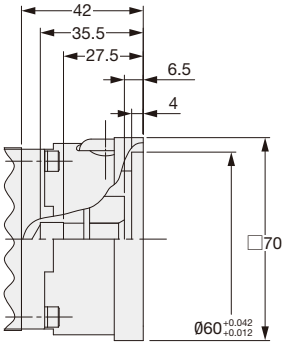

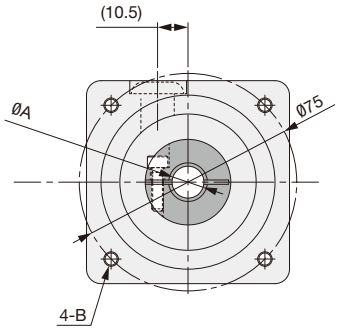

Flange Type	Dimension A	Dimension B
S7	Ø11 +0.018 +0.008	M5, Depth 10 (Through)

Detailed Diagrams of Input Shaft and Flange Shapes

■ 400 W Class S1/S3

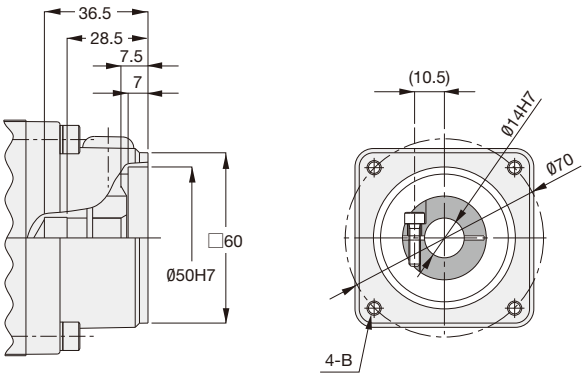

Flange Type	Frame Size	Dimension B
S1	15/22	M5, Depth 15 (Through)
	18/28	M5, Depth 10
S3	15/22	M4, Depth 15 (Through)
	18/28	M4, Depth 10

■ 400 W Class S6

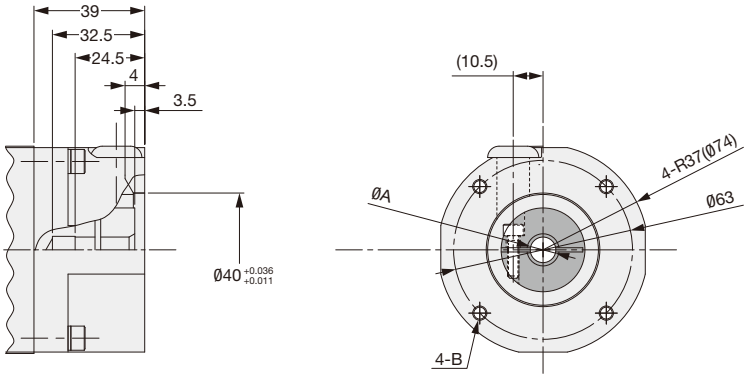

Flange Type	Frame Size	Dimension A	Dimension B
S6	15/22	Ø9 +0.022 +0.007	M5, Depth 10

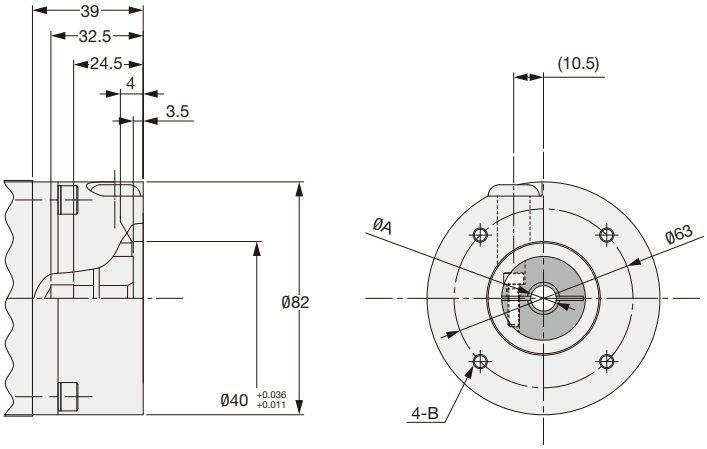

Flange Type	Frame Size	Dimension A	Dimension B
S6	18/28	Ø9 +0.022 +0.007	M5, Depth 10

■ 400 W Class S7

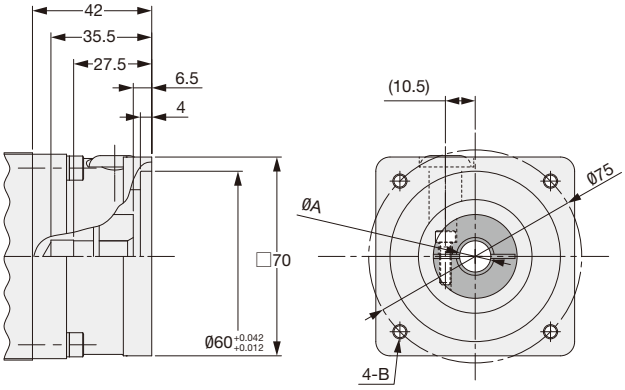

Flange Type	Dimension A	Dimension B
S7	Ø11 +0.026 +0.008	M5, Depth 10 (Through)

■ 750 W Class S1/S2/S3/S4

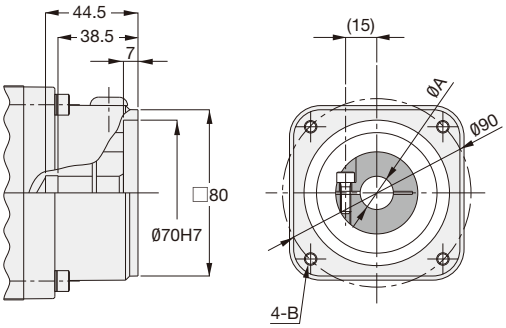

Flange Type	Frame Size	Dimension A	Dimension B
S1	18/28	Ø16H7	M6, Depth 10 (Through)
	22/32	Ø16H7	M6, Depth 12
S2	18/28	Ø19H7	M6, Depth 10 (Through)
	22/32	Ø19H7	M6, Depth 12
S3	18/28	Ø19H7	M5, Depth 10 (Through)
	22/32	Ø19H7	M5, Depth 12
S4	18/28	Ø16H7	M5, Depth 10 (Through)
	22/32	Ø16H7	M5, Depth 12

■ 750 W Class S9

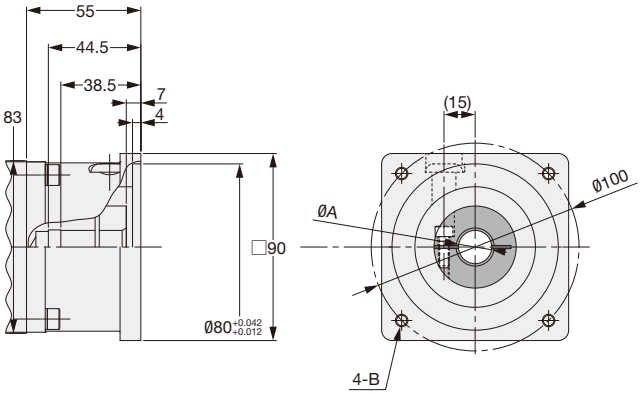

Flange Type	Dimension A	Dimension B
S9	Ø16 +0.018 +0.008	M6, Depth 10 (Through)

Detailed Diagrams of Input Shaft and Flange Shapes

■ 750 W Class SA

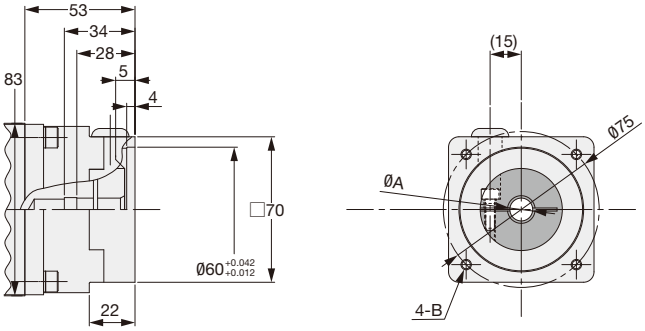

Flange Type	Frame Size	Dimension A	Dimension B
SA	18/28	Ø11 +0.026 +0.008	M5, Depth 12

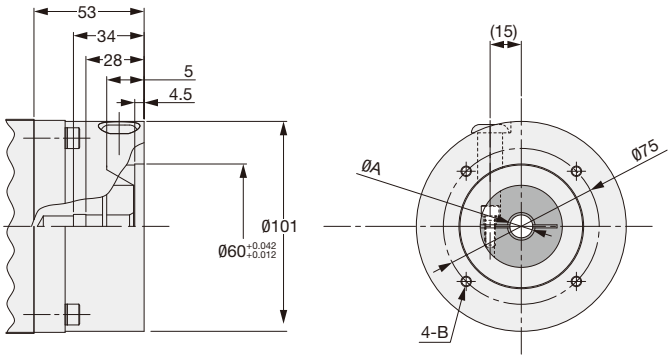

Flange Type	Frame Size	Dimension A	Dimension B
SA	22/32	Ø11 +0.026 +0.008	M5, Depth 12

■ 1000 W Class K13/K22/K23/K61

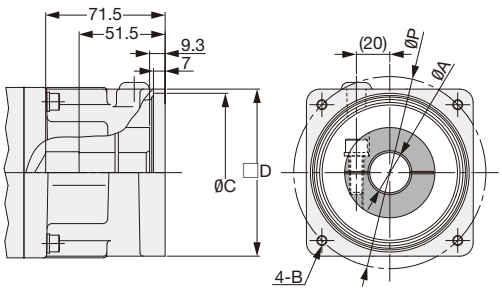

Flange Type	Reduction Ratio	Dimension A	Dimension B	Dimension C	Dimension D	Dimension P
K13	All	Ø24H7	M6, Depth 15 (Through)	Ø95H7	□100	Ø115
K22	3 to 5, 10 to 30	Ø22H7	M8, Depth 15 (Through)	Ø95H7	□100	Ø115
	7.5 to 10, 40 to 60			Ø95 +0.035 +0.013		
K23	3 to 5, 10 to 30	Ø24H7	M8, Depth 15 (Through)	Ø95H7	□100	Ø115
	7.5 to 10, 40 to 60			Ø95 +0.035 +0.013		
K61	All	Ø19H7	M6, Depth 12	Ø80 +0.030 +0.012	□90	Ø100

■ 1000 W Class KC9

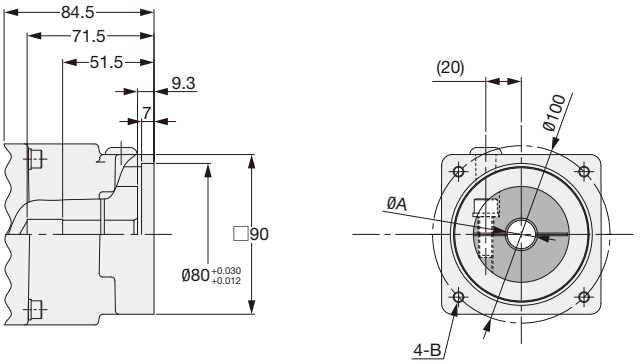

Flange Type	Dimension A	Dimension B
KC9	Ø16 +0.026 +0.008	M6, Depth 12

■ 2000 W Class K13/K21/K22/K23/K31/K32/K33/K41

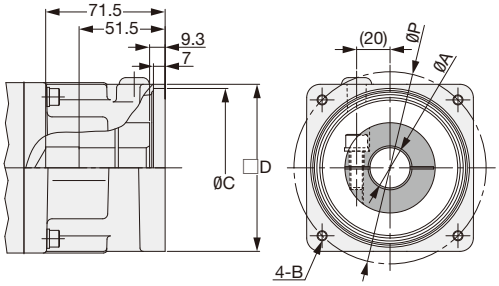

Flange Type	Dimension A	Dimension B	Dimension C	Dimension D	Dimension P
K13	Ø24H7	M6, Depth 15 (Through)	Ø95H7	□100	Ø115
K21	Ø19H7	M8, Depth 15 (Through)	$Ø95^{+0.035}_{+0.013}$	□100	Ø115
K22	Ø22H7	M8, Depth 15 (Through)	$Ø95^{+0.035}_{+0.013}$	□100	Ø115
K23	Ø24H7	M8, Depth 15 (Through)	$Ø95^{+0.035}_{+0.013}$	□100	Ø115
K31	Ø19H7	M8, Depth 15 (Through)	Ø110H7	□130	Ø145
K32	Ø22H7	M8, Depth 15 (Through)	Ø110H7	□130	Ø145
K33	Ø24H7	M8, Depth 15 (Through)	Ø110H7	□130	Ø145
K41	Ø19H7	M8, Depth 15 (Through)	Ø110H7	□120	Ø145

■ 2000 W Class and 3000 W Class K75

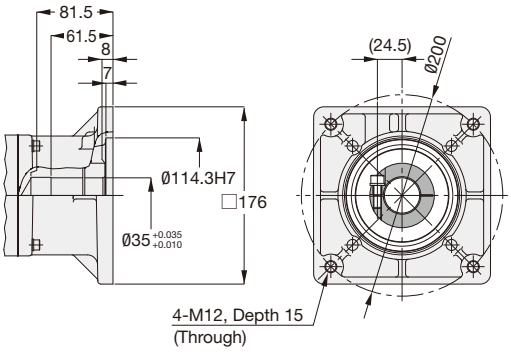

Detailed Diagrams of Input Shaft and Flange Shapes

■ 3000 W Class K13/K21/K22/K23/K32/K33/K34/K52

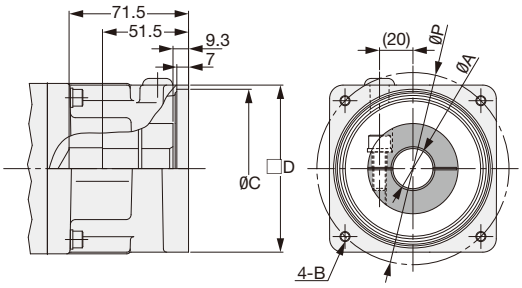

Flange Type	Dimension A	Dimension B	Dimension C	Dimension D	Dimension P
K13	Ø24$^{+0.021}_{+0.009}$	M6, Depth 15 (Through)	Ø95H7	□100	Ø115
K21	Ø19H7	M8, Depth 15 (Through)	Ø95$^{+0.035}_{+0.013}$	□100	Ø115
K22	Ø22H7	M8, Depth 15 (Through)	Ø95$^{+0.035}_{+0.013}$	□100	Ø115
K23	Ø24$^{+0.021}_{+0.009}$	M8, Depth 15 (Through)	Ø95$^{+0.035}_{+0.013}$	□100	Ø115
K32	Ø22H7	M8, Depth 15 (Through)	Ø110H7	□130	Ø145
K33	Ø24$^{+0.021}_{+0.009}$	M8, Depth 15 (Through)	Ø110H7	□130	Ø145
K34	Ø28H7	M8, Depth 15 (Through)	Ø110H7	□130	Ø145
K52	Ø22H7	M8, Depth 15 (Through)	Ø110$^{+0.035}_{+0.013}$	□120	Ø130

■ 3000 W Class KBC

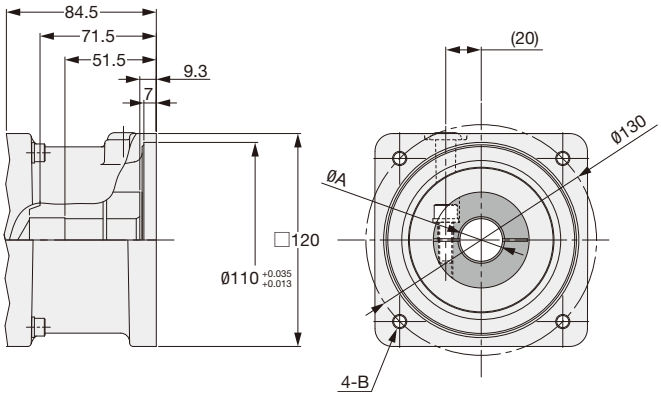

Flange Type	Dimension A	Dimension B
KBC	Ø24$^{+0.021}_{+0.009}$	M8, Depth 15 (Through)

AF3 Type

■ 100 W Class (only backlash 1 arc min/3 arc min specifications) F1/F3

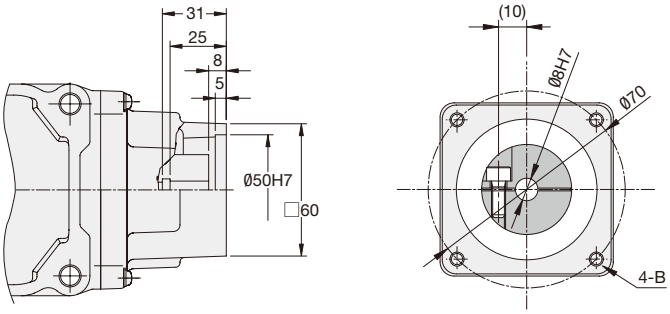

Flange Type	Dimension B
F1	M5, Depth 10
F3	M4, Depth 10

■ 100 W Class (only low backlash specifications) F1/F3

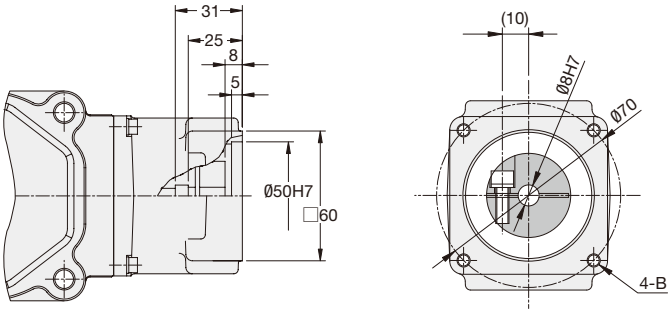

Flange Type	Dimension B
F1	M5, Depth 12
F3	M4, Depth 12

■ 100 W Class (only backlash 1 arc min/3 arc min specifications) F1/F3

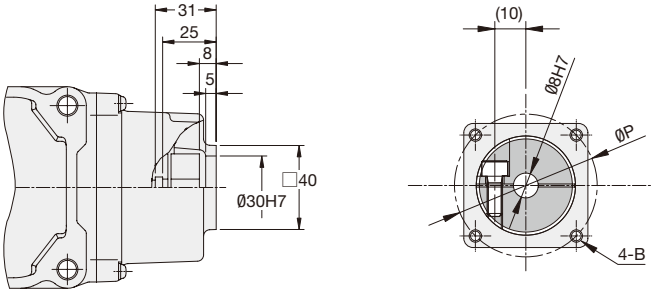

Flange Type	Dimension B	Dimension P
S1	M4, Depth 10	Ø46
S3	M3, Depth 10	Ø45

Detailed Diagrams of Input Shaft and Flange Shapes

■ 100 W Class (only low backlash specifications) S1/S3

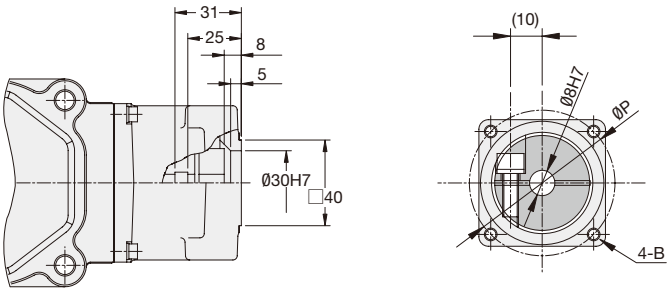

Flange Type	Dimension B	Dimension P
S1	M4, Depth 10	Ø46
S3	M3, Depth 10	Ø45

■ 100 W Class (only backlash 1 arc min/3 arc min specifications) S6

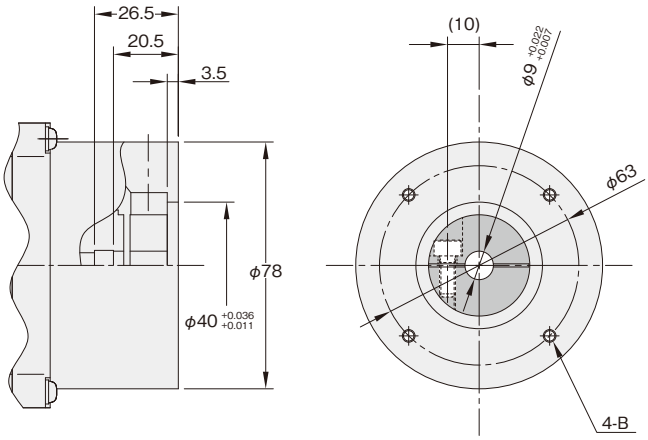

Flange Type	Dimension B
S6	M5, Depth 12

■ 100 W Class (only low backlash specifications) S6

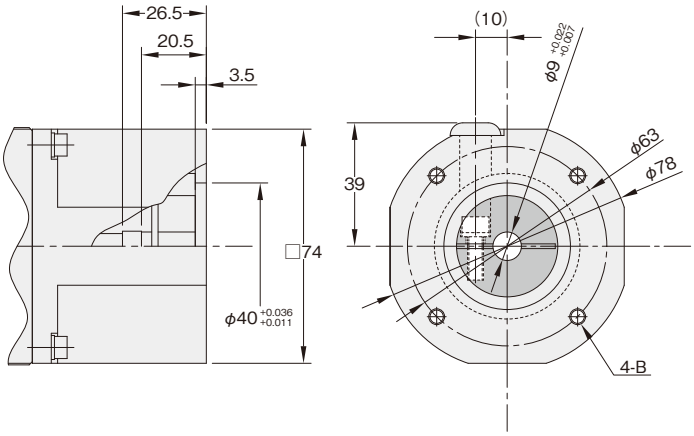

Flange Type	Dimension B
S6	M5, Depth 12

■ 200 W Class F1/F2/F3

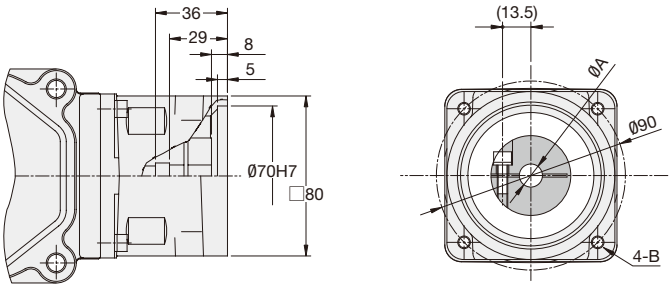

Flange Type	Dimension A	Dimension B
F1	Ø11 $^{+0.018}_{+0.008}$	M6, Depth 12 (Through)
F2	Ø14H7	M6, Depth 12 (Through)
F3	Ø11 $^{+0.018}_{+0.008}$	M5, Depth 12 (Through)

■ 200 W Class S1/S2/S3/S5

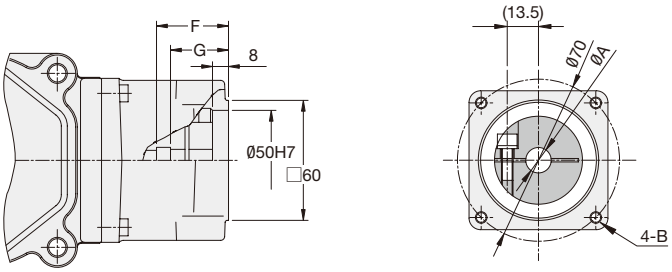

Flange Type	Dimension A	Dimension B	Dimension F	Dimension G
S1	Ø11 $^{+0.018}_{+0.008}$	M5, Depth 12	36	29
S2	Ø14H7	M5, Depth 12	36	29
S3	Ø11 $^{+0.018}_{+0.008}$	M4, Depth 12	36	29
S5	Ø9 $^{+0.015}_{+0.007}$	M5, Depth 12	32	25

* S5 is available only for backlash 1 arc min and 3 arc min specifications.

■ 200 W Class S6

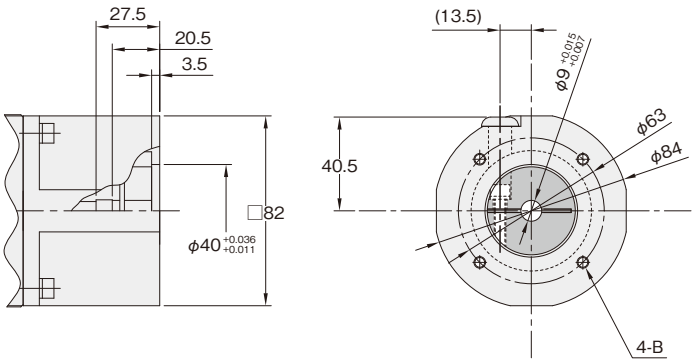

Flange Type	Dimension B
S6	M5, Depth 12

■ 200 W Class S7

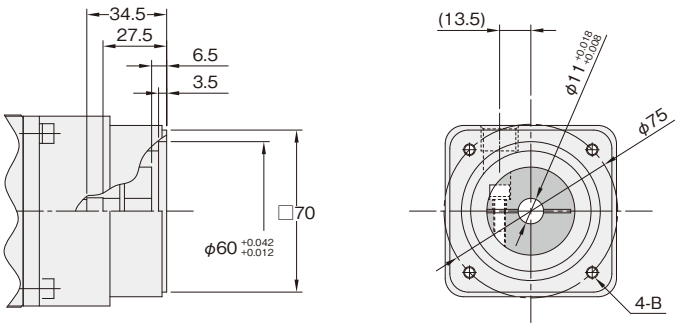

Flange Type	Dimension B
S7	M5, Depth 12

Detailed Diagrams of Input Shaft and Flange Shapes

■ 400 W Class F1/F3

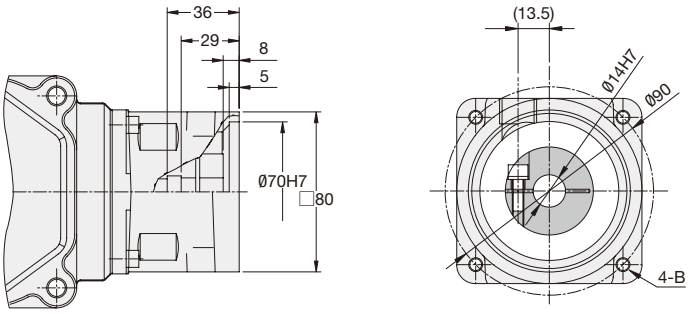

Flange Type	Dimension B
F1	M6, Depth 12 (Through)
F3	M5, Depth 12 (Through)

■ 400 W Class S1/S3

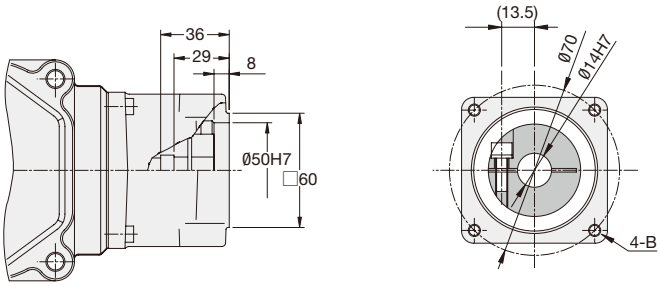

Flange Type	Dimension B
S1	M5, Depth 12
S3	M4, Depth 12

■ 400 W Class S6

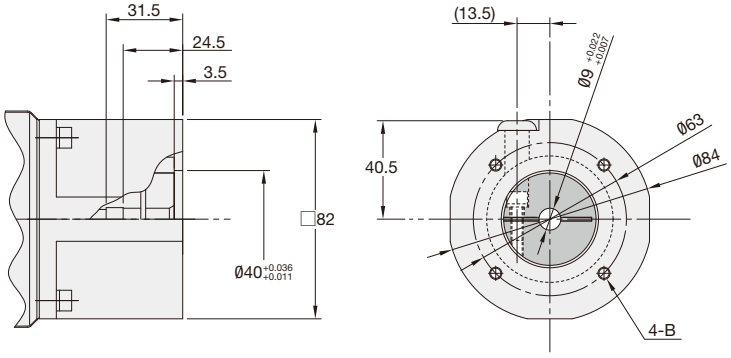

Flange Type	Dimension B
S6	M5, Depth 12

■ 400 W Class S7

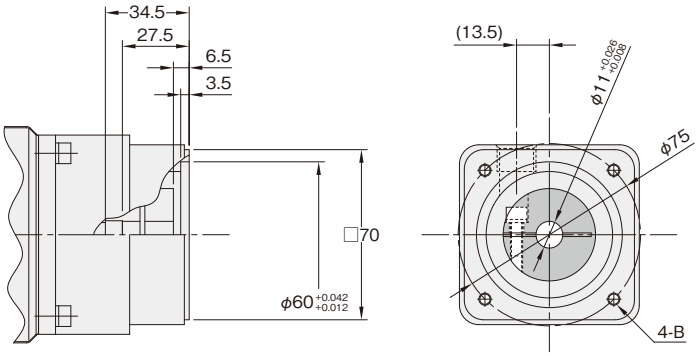

Flange Type	Dimension B
S7	M5, Depth 12

■ 750 W Class F1/F2

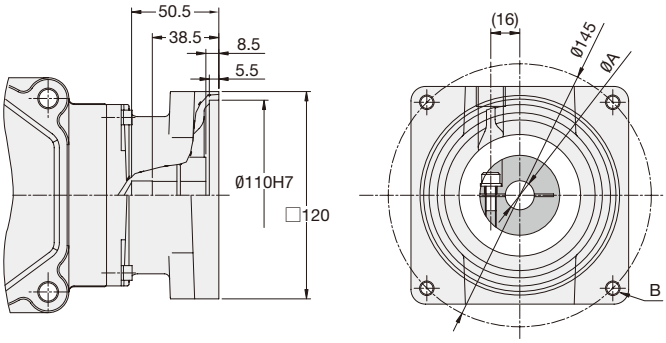

Flange Type	Dimension A	Dimension B
F1	$Ø16^{+0.018}_{+0.008}$	M8, Depth 14 (Through)
F2	Ø19H7	M8, Depth 14 (Through)

■ 750 W Class S1/S2/S3/S4/S6

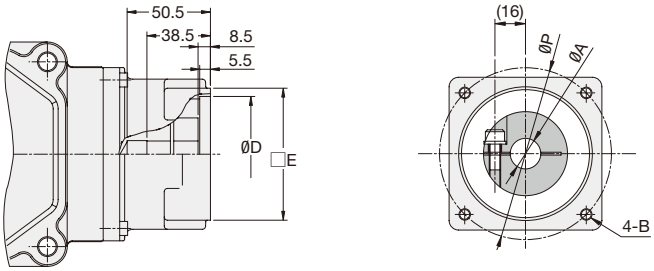

Flange Type	Dimension A	Dimension B	Dimension D	Dimension E	Dimension P
S1	$Ø16^{+0.018}_{+0.008}$	M6, Depth 12	Ø70H7	□80	Ø90
S2	Ø19H7	M6, Depth 12	Ø70H7	□80	Ø90
S3	Ø19H7	M5, Depth 10	Ø70H7	□80	Ø90
S4	$Ø16^{+0.018}_{+0.008}$	M5, Depth 10	Ø70H7	□80	Ø90
S6	$Ø14^{+0.030}_{+0.012}$	M6, Depth 12	$Ø80^{+0.030}_{+0.012}$	□90	Ø100

* S6 is available only for backlash 1 arc min and 3 arc min specifications.

■ 750 W Class SA

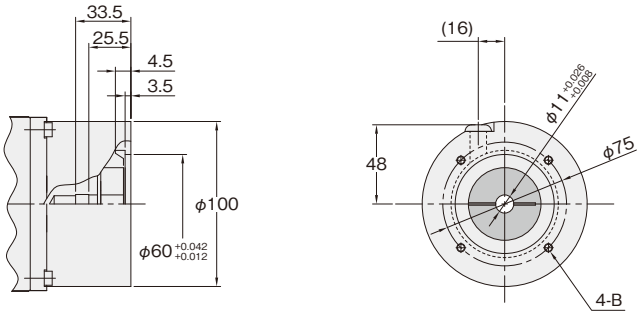

Flange Type	Dimension B
SA	M5, Depth 12

■ 750 W Class S9

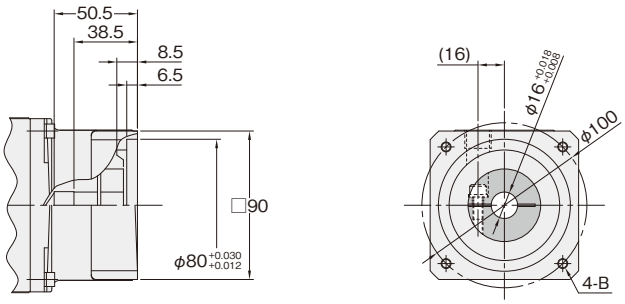

Flange Type	Dimension B
S9	M6, Depth 12

Detailed Diagrams of Input Shaft and Flange Shapes

■ 1000 W Class (only backlash 1 arc min/3 arc min specifications) K21/K22/K23/K43

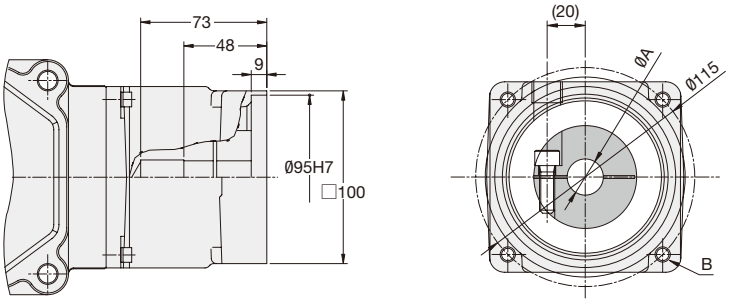

Flange Type	Dimension A	Dimension B
K21	Ø19H7	M8, Depth 15
K22	Ø22H7	M8, Depth 15
K23	Ø24H7	M8, Depth 15
K43	Ø24H7	M6, Depth 15

■ 1000 W Class (only backlash 1 arc min/3 arc min specifications) K31/K32/K33

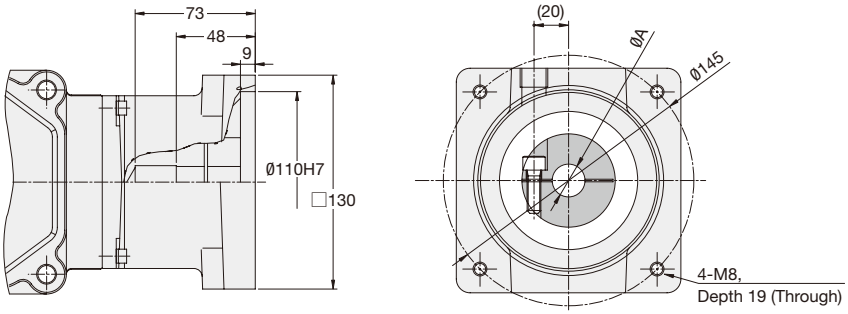

Flange Type	Dimension A
K31	Ø19H7
K32	Ø22H7
K33	Ø24H7

■ 1000 W Class (only backlash 1 arc min/3 arc min specifications) KC9

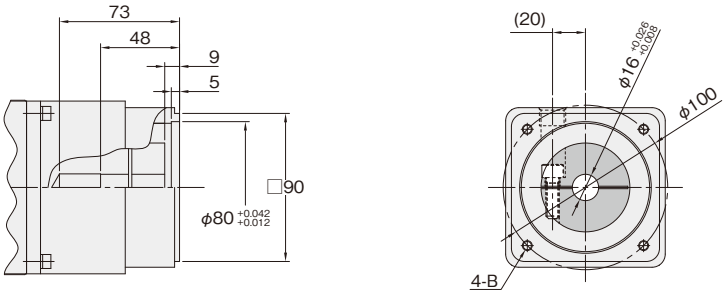

Flange Type	Dimension B
KC9	M6, Depth 12

■ 2000 W Class F31/F33

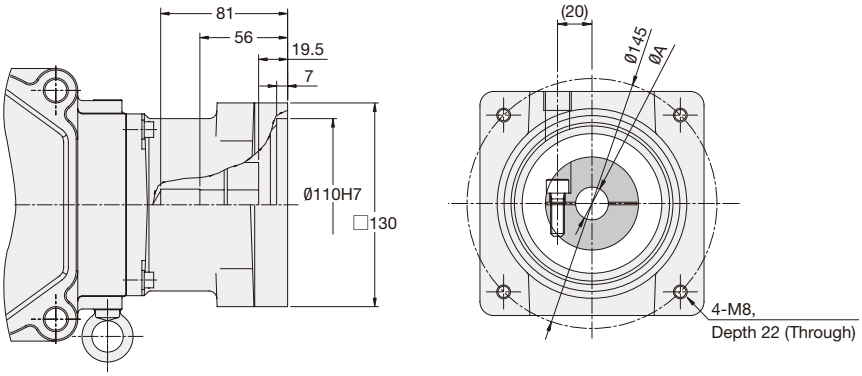

Flange Type	Dimension A
F31	Ø19 $^{+0.021}_{+0.009}$
F33	Ø24H7

■ 2000 W Class K21/K22/K23/K43

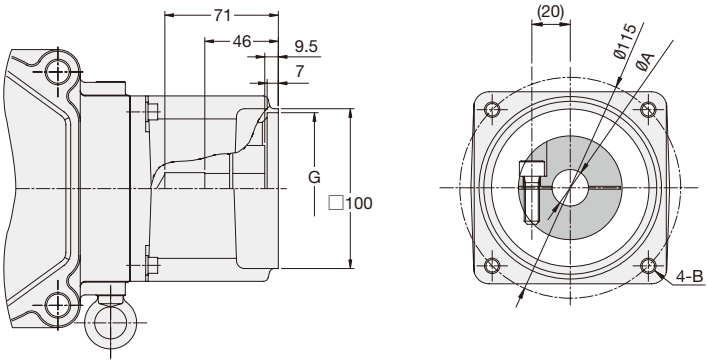

Flange Type	Dimension A	Dimension B	Dimension C
K21	Ø19 $^{+0.021}_{+0.009}$	M8, Depth 15	Ø95 $^{+0.035}_{+0.013}$
K22	Ø22H7	M8, Depth 15	Ø95 $^{+0.035}_{+0.013}$
K23	Ø24H7	M8, Depth 15	Ø95 $^{+0.035}_{+0.013}$
K43	Ø24H7	M6, Depth 15	Ø95H7 $^{+0.035}_{+0.013}$

■ 2000 W Class K31/K32/K33

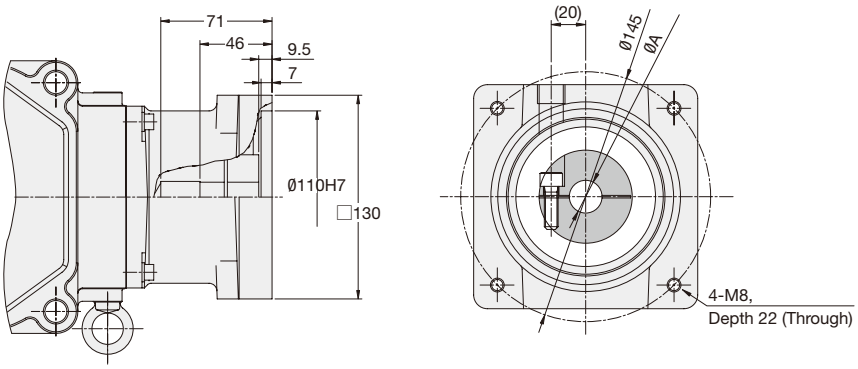

Flange Type	Dimension A
K31	Ø19 $^{+0.021}_{+0.009}$
K32	Ø22H7
K33	Ø24H7

MEMO

Performance Tables [for Calculation and Selection]

APG Type Backlash 3 arc min/15 arc min Specifications

[Notes]
- This performance table is based on pairing with a servo motor running at the rated input speed of 3000 r/min.
- The motor rated output torque is based on values after a warm-up operation of the unit.
- The transmission efficiency percentage is only a reference value.
- The transmission efficiency varies greatly depending on the input speed and the load on the product. Please be cautious.

Reduction Ratio	Output Shaft Diameter	Motor Power Class	Motor Rated Output Torque (3000 r/min)	Transmission Efficiency
		W	N·m	%
1/3	12	100	0.57	60
	12	150	0.93	65
	12	200	1.5	78
	12	400	3.4	86
	18	600	4.9	86
	18	750	6.4	90
	22	1000	7.2	78
	22	1500	11.5	85
	22	2000	17.2	86
	28	3000	25.8	90
1/5	12	100	1.0	60
	12	150	1.7	70
	12	200	2.5	78
	12	400	5.7	86
	18	600	8.2	86
	18	750	10.7	90
	22	1000	12.7	80
	22	1500	21.5	86
	22	2000	28.6	88
	28	3000	43.0	90
1/10	12	100	2.1	68
	12	150	3.5	74
	12	200	5.1	78
	18	400	11.3	88
	18	600	16.8	88
	18	750	21.5	90
	22	1000	26.4	80
	22	1500	43.0	86
	22	2000	57.3	88
	28	3000	85.9	90
1/15	12	100	3.3	65
	12	150	5.0	70
	12	200	7.6	75
	18	400	16.2	82
	22	600	22.9	80
	22	750	30.4	84
	28	1000	40.6	82
	28	1500	60.9	84
	28	2000	81.2	86

Performance Tables [for Calculation and Selection]

Reduction Ratio	Output Shaft Diameter	Motor Power Class	Motor Rated Output Torque (3000 r/min)	Transmission Efficiency
		W	N·m	%
1/20	12	100	4.5	65
	12	150	6.7	70
	12	200	10.2	75
	18	400	21.6	82
	22	600	30.6	80
	22	750	40.6	84
	28	1000	54.1	82
	28	1500	81.2	84
	28	2000	108.2	86
1/30	12	100	6.7	65
	18	150	10.0	70
	18	200	15.3	75
	18	400	32.5	82
	22	600	45.8	80
	22	750	60.9	84
	28	1000	81.2	82
	28	1500	121.8	84
1/40	18	100	8.3	65
	18	150	13.8	72
	18	200	19.1	75
	22	400	40.7	80
	28	600	61.1	80
	28	750	81.2	82
	28	1000	108.2	84
1/50	18	100	10.3	65
	18	150	17.2	72
	18	200	25.5	75
	22	400	50.9	80
	28	600	76.4	80
	28	750	95.5	82
	28	1000	135.3	84
1/60	18	100	12.4	65
	18	150	20.6	72
	18	200	28.6	75
	22	400	61.1	80
	28	600	91.7	80
	28	750	121.8	82
1/100	18	100	20.7	64
	22	200	44.6	70
	28	400	95.5	75

AG3 Type Low Backlash Specification

[Notes]
- This performance table is based on pairing with a servo motor running at the rated input speed of 3000 r/min.
- The motor rated output torque is based on values after a warm-up operation of the unit.
- The transmission efficiency percentage is only a reference value.
- The transmission efficiency varies greatly depending on the input speed and the load on the product. Please be cautious.
- The "*" mark indicates a limited torque type. Please make sure to check the motor rated output torque.

Reduction Ratio	Output Shaft Diameter	Motor Power Class	Motor Rated Output Torque (3000 r/min)	Transmission Efficiency
		W	N·m	%
1/5	18	100	0.9	55
	18	200	1.9	60
	22	400	4.0	65
	28	750	9.6	80
	32	2000	25	80
1/10	18	100	1.9	60
	18	200	3.9	60
	22	400	8.0	65
	28	750	19	80
	32	2000	51	80
1/15	18	100	2.9	60
	18	200	5.8	60
	22	400	13	65
	28	750	29	80
	32	2000	76	80
1/20	18	100	3.8	60
	18	200	7.7	60
	22	400	16	65
	28	750	39	80
	32	2000	102	80
1/25	18	100	4.8	60
	18	200	10	60
	22	400	20	65
	28	750	46	80
	32	2000	130	80
1/30	18	100	5.8	60
	22	200	12	60
	28	400	25	65
	32	750	59	80
	40	2000	153	80
1/40	18	100	7.7	60
	22	200	16	65
	28	400	35	70
	32	750	71	75
	40	2000	211	80
1/50	18	100	10	60
	22	200	20	65
	28	400	43	70
	32	750	88	75
	40	2000	261	80

Performance Tables [for Calculation and Selection]

Reduction Ratio	Output Shaft Diameter	Motor Power Class	Motor Rated Output Torque (3000 r/min)	Transmission Efficiency
		W	N·m	%
1/60	22	100	13	65
	22	200	26	65
	28	400	52	70
	32	750	107	75
	40	2000	302	80
1/80	22	100	16	65
	22	200	33	65
	28	400	71	70
	32	750	142	75
	40	2000	423	80
1/100	22	100	20	65
	28	200	43	65
	32	400	88	70
	40	750	177	75
	50	2000	533	80
1/120	22	100	25	65
	28	200	50	65
	32	400	108	70
	40	750	218	75
	50	2000	594	80
1/160	22	100	32	65
	28	200	68	65
	32	400	141	70
	40	750	278	75
	50	2000	844	80
1/200	22	100	40	65
	28	200	81	65
	32	400	180	70
	40	750	348	75
	50	2000	* 862	80

AGA Type Low Backlash Specification

[Notes]
- This performance table is based on pairing with a servo motor running at the rated input speed of 3000 r/min.
- The motor rated output torque is based on values after a warm-up operation of the unit.
- The transmission efficiency percentage is only a reference value.
- The transmission efficiency varies greatly depending on the input speed and the load on the product. Please be cautious.
- The "*" mark indicates a limited torque type. Please make sure to check the motor rated output torque.

Reduction Ratio	Output Shaft Diameter	Motor Power Class	Motor Rated Output Torque (3000 r/min)	Transmission Efficiency
		W	N·m	%
1/100	50	2000	533	80
1/120	50	2000	594	80
1/160	50	2000	844	80
1/200	50	2000	* 862	80

Performance Tables [for Calculation and Selection]

AH2 Type Low Backlash Specification

[Notes]
- This performance table is based on pairing with a servo motor running at the rated input speed of 3000 r/min.
- The motor rated output torque is based on values after a warm-up operation of the unit.
- The transmission efficiency percentage is only a reference value.
- The transmission efficiency varies greatly depending on the input speed and the load on the product. Please be cautious.
- The "*" mark indicates a limited torque type. Please make sure to check the motor rated output torque.

Reduction Ratio	Output Shaft Diameter	Motor Power Class	Motor Rated Output Torque (3000 r/min)	Transmission Efficiency
		W	N·m	%
1/5	22	100	0.9	55
	22	200	2.0	60
	28	400	3.9	60
	32	750	7.8	65
	40	2000	24	70
1/10	22	100	2.2	65
	22	200	4.3	65
	28	400	8.4	65
	32	750	16	65
	40	2000	47	70
1/15	22	100	3.4	70
	22	200	7.1	70
	28	400	14	70
	32	750	26	70
	40	2000	73	75
1/20	22	100	4.6	70
	22	200	9.4	70
	28	400	19	70
	32	750	35	70
	40	2000	98	75
1/25	22	100	5.6	70
	22	200	12	70
	28	400	25	75
	32	750	45	75
	40	2000	122	75
1/30	22	100	6.9	70
	22	200	15	75
	28	400	29	75
	32	750	56	75
	40	2000	145	75
1/40	22	100	9.2	70
	22	200	20	75
	28	400	39	75
	32	750	74	75
	40	2000	196	75
1/50	22	100	11	70
	22	200	25	75
	28	400	49	75
	32	750	94	75
	40	2000	243	75

Reduction Ratio	Output Shaft Diameter	Motor Power Class	Motor Rated Output Torque (3000 r/min)	Transmission Efficiency
		W	N·m	%
1/60	22	100	14	70
	22	200	27	70
	28	400	55	70
	32	750	110	75
	40	2000	292	75
1/80	22	100	19	70
	22	200	34	65
	28	400	71	65
	32	750	141	70
	40	2000	380	70
1/100	22	100	24	70
	28	200	43	65
	32	400	88	65
	40	750	172	70
	50	2000	476	70
1/120	22	100	30	75
	28	200	57	70
	32	400	110	70
	40	750	212	70
	50	2000	584	75
1/160	22	100	40	75
	28	200	75	70
	32	400	149	70
	40	750	282	70
	50	2000	775	75
1/200	22	100	50	75
	28	200	94	70
	32	400	188	70
	40	750	353	70
	50	2000	* 862	70
1/240	22	100	60	75
	28	200	110	70
	32	400	221	70
	40	750	423	70
	50	2000	* 862	70

Performance Tables [for Calculation and Selection]

AFC Type (Right Angle Hollow Bore) Backlash 3 arc min/30 arc min Specifications

[Notes]
- This performance table is based on pairing with a servo motor running at the rated input speed of 3000 r/min.
- The motor rated output torque is based on values after a warm-up operation of the unit.
- The transmission efficiency percentage is only a reference value.
- The transmission efficiency varies greatly depending on the input speed and the load on the product. Please be cautious.

Reduction Ratio	Output Shaft Diameter	Motor Power Class	Motor Rated Output Torque (3000 r/min)	Transmission Efficiency
		W	N·m	%
1/3	12	200	1.3	70
	15	400	3.0	78
	18	750	5.6	78
	22	1000	7.5	78
	28	2000	15.7	82
	32	3000	23.6	82
1/5	12	200	2.2	70
	15	400	5.0	78
	18	750	9.4	78
	22	1000	12.5	78
	28	2000	26.2	82
	32	3000	39.4	82
1/7.5	12	100	1.5	64
	15	200	3.7	78
	18	400	7.5	78
	22	750	14.0	78
	28	1000	18.7	78
	32	2000	39.4	82
1/10	12	100	2.0	64
	15	200	5.0	78
	18	400	10.0	78
	22	750	18.7	78
	28	1000	25.0	78
	32	2000	52.5	82

Reduction Ratio	Output Shaft Diameter	Motor Power Class	Motor Rated Output Torque (3000 r/min)	Transmission Efficiency
		W	N·m	%
1/10	15	100	1.9	58
	18	200	4.7	74
	22	400	9.5	74
	28	750	18.2	76
	32	1000	25.0	78
1/12	15	100	2.3	58
	18	200	5.9	74
	22	400	11.8	74
	28	750	22.8	76
	32	1000	31.2	78
1/15	15	100	2.8	58
	18	200	7.1	74
	22	400	14.2	74
	28	750	27.4	76
	32	1000	37.4	78
1/20	15	100	3.7	58
	18	200	9.5	74
	22	400	18.9	74
	28	750	36.5	76
	32	1000	49.9	78
1/25	15	100	4.6	58
	18	200	11.8	74
	22	400	23.7	74
	28	750	45.6	76
	32	1000	62.4	78
1/30	15	100	5.6	58
	18	200	14.2	74
	22	400	28.4	74
	28	750	54.7	76
	32	1000	74.9	78
1/40	18	100	9.0	70
	22	200	18.9	74
	28	400	38.9	76
	32	750	76.8	80
1/50	18	100	11.2	70
	22	200	23.7	74
	28	400	48.6	76
	32	750	96.0	80
1/60	18	100	13.4	70
	22	200	28.4	74
	28	400	58.4	76
	32	750	115.2	80

Performance Tables [for Calculation and Selection]

AFC Type (Right Angle Shaft) Backlash 3 arc min/30 arc min Specifications

[Notes]
- This performance table is based on pairing with a servo motor running at the rated input speed of 3000 r/min.
- The motor rated output torque is based on values after a warm-up operation of the unit.
- The transmission efficiency percentage is only a reference value.
- The transmission efficiency varies greatly depending on the input speed and the load on the product. Please be cautious.

Reduction Ratio	Output Shaft Diameter	Motor Power Class	Motor Rated Output Torque (3000 r/min)	Transmission Efficiency
		W	N·m	%
1/3	10	100	0.6	60
	12	200	1.3	70
	15	400	3.0	78
	18	750	5.6	78
	22	1000	7.4	78
	28	2000	15.7	78
	32	3000	23.6	78
1/5	10	100	1.0	60
	12	200	2.2	70
	15	400	5.0	78
	18	750	9.4	78
	22	1000	12.5	78
	28	2000	26.2	82
	32	3000	39.4	82
1/7.5	12	100	1.5	64
	15	200	3.7	78
	18	400	7.5	78
	22	750	14.0	78
	28	1000	18.7	78
	32	2000	39.4	82
1/10	12	100	2.0	64
	15	200	5.0	78
	18	400	10.0	78
	22	750	18.7	78
	28	1000	25.0	78
	32	2000	52.5	82

Reduction Ratio	Output Shaft Diameter	Motor Power Class	Motor Rated Output Torque (3000 r/min)	Transmission Efficiency
		W	N·m	%
1/10	15	100	1.9	58
	18	200	4.7	74
	22	400	9.5	74
	28	750	18.2	76
	32	1000	25.0	78
1/12	15	100	2.3	58
	18	200	5.9	74
	22	400	11.8	74
	28	750	22.8	76
	32	1000	31.2	78
1/15	15	100	2.8	58
	18	200	7.1	74
	22	400	14.2	74
	28	750	27.4	76
	32	1000	37.4	78
1/20	15	100	3.7	58
	18	200	9.5	74
	22	400	18.9	74
	28	750	36.5	76
	32	1000	49.9	78
1/25	15	100	4.6	58
	18	200	11.8	74
	22	400	23.7	74
	28	750	45.6	76
	32	1000	62.4	78
1/30	15	100	5.6	58
	18	200	14.2	74
	22	400	28.4	74
	28	750	54.7	76
	32	1000	74.9	78
1/40	18	100	9.0	70
	22	200	18.9	74
	28	400	38.9	76
	32	750	76.8	80
1/50	18	100	11.2	70
	22	200	23.7	74
	28	400	48.6	76
	32	750	96.0	80
1/60	18	100	13.4	70
	22	200	28.4	74
	28	400	58.4	76
	32	750	115.2	80

Performance Tables [for Calculation and Selection]

AF3S Type (Concentric Right Angle Hollow Bore) Backlash 1 arc min/3 arc min Specifications

[Notes]
- This performance table is based on pairing with a servo motor running at the rated input speed of 3000 r/min.
- The motor rated output torque is based on values after a warm-up operation of the unit.
- The transmission efficiency percentage is only a reference value.
- The transmission efficiency varies greatly depending on the input speed and the load on the product. Please be cautious.
- The "*" mark indicates a limited torque type. Please make sure to check the motor rated output torque.

Reduction Ratio	Output Shaft Diameter	Motor Power Class	Motor Rated Output Torque (3000 r/min)	Transmission Efficiency
		W	N·m	%
1/10	15	100	2.2	60
	25	200	3.8	60
	30	400	7.8	60
	35	750	16	60
	35	1000	22	70
	45	2000	44	70
1/15	15	100	3.5	65
	25	200	6.4	65
	30	400	13	65
	35	750	26	65
1/20	15	100	5.0	70
	25	200	8.9	65
	30	400	18	65
	35	750	36	70
	35	1000	45	70
	45	2000	90	70
1/25	15	100	6.4	70
	25	200	12	65
	30	400	23	70
	35	750	46	70
1/30	15	100	7.6	75
	25	200	14	65
	30	400	27	70
	35	750	55	70
	35	1000	67	70
	45	2000	144	75
1/40	15	100	10	75
	25	200	19	65
	30	400	36	70
	35	750	76	75
	35	1000	96	75
	45	2000	191	75

Reduction Ratio	Output Shaft Diameter	Motor Power Class	Motor Rated Output Torque (3000 r/min)	Transmission Efficiency
		W	N·m	%
1/50	15	100	13	75
	25	200	24	65
	30	400	45	70
	35	750	95	75
	35	1000	120	75
	45	2000	239	75
1/60	15	100	15	75
	25	200	29	65
	30	400	54	70
	35	750	115	75
	35	1000	143	75
	45	2000	287	75
1/75	15	100	18	70
	30	200	31	60
	35	400	63	65
	45	750	135	70
1/90	15	100	22	70
	30	200	37	60
	35	400	75	65
	45	750	162	70
1/120	15	100	29	70
	30	200	50	60
	35	400	100	65
	45	750	217	70
1/150	30	200	57	60
	35	400	124	65
	45	750	251	70
1/180	30	200	* 57	60
	35	400	* 124	65
	45	750	* 251	70

Performance Tables [for Calculation and Selection]

AF3F Type (Concentric Right Angle Shaft) Backlash 1 arc min/3 arc min Specifications

[Notes]
- This performance table is based on pairing with a servo motor running at the rated input speed of 3000 r/min.
- The motor rated output torque is based on values after a warm-up operation of the unit.
- The transmission efficiency percentage is only a reference value.
- The transmission efficiency varies greatly depending on the input speed and the load on the product. Please be cautious.
- The "*" mark indicates a limited torque type. Please make sure to check the motor rated output torque.

Reduction Ratio	Output Shaft Diameter	Motor Power Class	Motor Rated Output Torque (3000 r/min)	Transmission Efficiency
		W	N·m	%
1/10	18	100	2.2	60
	22	200	3.8	60
	28	400	7.8	60
	32	750	16	60
	32	1000	22	70
	40	2000	44	70
1/15	18	100	3.5	65
	22	200	6.4	65
	28	400	13	65
	32	750	26	65
1/20	18	100	5.0	70
	22	200	8.9	65
	28	400	18	65
	32	750	36	70
	32	1000	45	70
	40	2000	90	70
1/25	18	100	6.4	70
	22	200	12	65
	28	400	23	70
	32	750	46	70
1/30	18	100	7.6	75
	22	200	14	65
	28	400	27	70
	32	750	55	70
	32	1000	67	70
	40	2000	144	75
1/40	18	100	10	75
	22	200	19	65
	28	400	36	70
	32	750	76	75
	32	1000	96	75
	40	2000	191	75

Reduction Ratio	Output Shaft Diameter	Motor Power Class	Motor Rated Output Torque (3000 r/min)	Transmission Efficiency
		W	N·m	%
1/50	18	100	13	75
	22	200	24	65
	28	400	45	70
	32	750	95	75
	32	1000	120	75
	40	2000	239	75
1/60	18	100	15	75
	22	200	29	65
	28	400	54	70
	32	750	115	75
	32	1000	143	75
	40	2000	287	75
1/75	18	100	18	70
	28	200	31	60
	32	400	63	65
	40	750	135	70
1/90	18	100	22	70
	28	200	37	60
	32	400	75	65
	40	750	162	70
1/120	18	100	29	70
	28	200	50	60
	32	400	100	65
	40	750	217	70
1/150	28	200	57	60
	32	400	124	65
	40	750	251	70
1/180	28	200	* 57	60
	32	400	* 124	65
	40	750	* 251	70

Performance Tables [for Calculation and Selection]

AF3S Type (Concentric Right Angle Hollow Bore) Low Backlash Specification

[Notes]
- This performance table is based on pairing with a servo motor running at the rated input speed of 3000 r/min.
- The motor rated output torque is based on values after a warm-up operation of the unit.
- The transmission efficiency percentage is only a reference value.
- The transmission efficiency varies greatly depending on the input speed and the load on the product. Please be cautious.

Reduction Ratio	Output Shaft Diameter	Motor Power Class	Motor Rated Output Torque (3000 r/min)	Transmission Efficiency
		W	N·m	%
1/5	30	400	3.8	60
	35	750	7.4	60
	45	2000	24	70
1/7.5	30	400	5.9	60
	35	750	11	60
	45	2000	35	70
1/10	20	100	2.0	60
	25	200	3.8	60
	30	400	7.8	60
	35	750	15	60
	45	2000	47	70
1/12	30	400	11	65
	35	750	20	65
	45	2000	57	70
1/15	20	100	3.1	65
	25	200	6.4	65
	30	400	13	65
	35	750	25	65
	45	2000	69	70
1/20	20	100	4.7	70
	25	200	8.8	65
	30	400	17	65
	35	750	34	70
	45	2000	92	70
1/25	20	100	5.9	70
	25	200	12	70
	30	400	23	70
	35	750	44	70
	45	2000	120	75
1/30	20	100	7.1	70
	25	200	14	70
	30	400	27	70
	35	750	53	70
	45	2000	144	75
1/40	20	100	9.4	70
	25	200	19	70
	30	400	36	70
	35	750	74	75
	45	2000	191	75
1/50	20	100	12	70
	25	200	24	70
	30	400	45	70
	35	750	94	75
	45	2000	239	75

Reduction Ratio	Output Shaft Diameter	Motor Power Class	Motor Rated Output Torque (3000 r/min)	Transmission Efficiency
		W	N·m	%
1/60	20	100	14	70
	25	200	27	70
	30	400	55	70
	35	750	113	75
	45	2000	287	75
1/80	25	100	17	65
	30	200	34	65
	35	400	71	65
	45	750	141	70
1/100	25	100	22	65
	30	200	44	65
	35	400	86	65
	45	750	172	70
1/120	25	100	28	70
	30	200	55	70
	35	400	102	65
	45	750	212	70
1/160	25	100	37	70
	30	200	74	70
	35	400	141	65
	45	750	282	70
1/200	25	100	47	70
	30	200	94	70
	35	400	181	70
	45	750	353	70
1/240	25	100	57	70
	30	200	110	70
	35	400	221	70
	45	750	423	70

Performance Tables [for Calculation and Selection]

AF3F Type (Concentric Right Angle Shaft) Low Backlash Specification

[Notes]
- This performance table is based on pairing with a servo motor running at the rated input speed of 3000 r/min.
- The motor rated output torque is based on values after a warm-up operation of the unit.
- The transmission efficiency percentage is only a reference value.
- The transmission efficiency varies greatly depending on the input speed and the load on the product. Please be cautious.

Reduction Ratio	Output Shaft Diameter	Motor Power Class	Motor Rated Output Torque (3000 r/min)	Transmission Efficiency
		W	N·m	%
1/5	28	400	3.8	60
	32	750	7.4	60
	40	2000	24	70
1/7.5	28	400	5.9	60
	32	750	11	60
	40	2000	35	70
1/10	18	100	2.0	60
	22	200	3.8	60
	28	400	7.8	60
	32	750	15	60
	40	2000	47	70
1/12	28	400	11	65
	32	750	20	65
	40	2000	57	70
1/15	18	100	3.1	65
	22	200	6.4	65
	28	400	13	65
	32	750	25	65
	40	2000	69	70
1/20	18	100	4.7	70
	22	200	8.8	65
	28	400	17	65
	32	750	34	70
	40	2000	92	70
1/25	18	100	5.9	70
	22	200	12	70
	28	400	23	70
	32	750	44	70
	40	2000	120	75
1/30	18	100	7.1	70
	22	200	14	70
	28	400	27	70
	32	750	53	70
	40	2000	144	75
1/40	18	100	9.4	70
	22	200	19	70
	28	400	36	70
	32	750	74	75
	40	2000	191	75
1/50	18	100	12	70
	22	200	24	70
	28	400	45	70
	32	750	94	75
	40	2000	239	75

Reduction Ratio	Output Shaft Diameter	Motor Power Class	Motor Rated Output Torque (3000 r/min)	Transmission Efficiency
		W	N·m	%
1/60	18	100	14	70
	22	200	27	70
	28	400	55	70
	32	750	113	75
	40	2000	287	75
1/80	22	100	17	65
	28	200	34	65
	32	400	71	65
	40	750	141	70
1/100	22	100	22	65
	28	200	44	65
	32	400	86	65
	40	750	172	70
1/120	22	100	28	70
	28	200	55	70
	32	400	102	65
	40	750	212	70
1/160	22	100	37	70
	28	200	74	70
	32	400	141	65
	40	750	282	70
1/200	22	100	47	70
	28	200	94	70
	32	400	181	70
	40	750	353	70
1/240	22	100	57	70
	28	200	110	70
	32	400	221	70
	40	750	423	70

Selection Process Steps and Examples

Selection Examples High Precision Gearboxes for Servo Motors

Application ..... Conveyor (light shock load)
Connection method ..... Chain (located in the center of the shaft)
Conveyance velocity V ..... 30 m/min
Workpiece weight ..... 100 kg
Operation time ..... 12 hours/day
Number of startups and stops ... 720 times/day
Friction coefficient of chain and guide μ ... 0.2
Servo motor rated speed ..... 3000 r/min

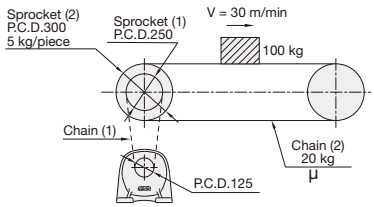

The chain (1), the sprocket (1), and other conditions shall not be included in this calculation.

Please utilize the calculation and selection tool on our website. (https://sentei.nissei-gtr.co.jp/english/servo_calculation)
You may calculate the necessary power by inputting the usage conditions and the series on our website.

Selection Process Steps		Selection Examples
Determining Series and Backlash	Determining a right angle hollow bore, parallel shaft, or right angle shaft - Compact Parallel Shaft/Planetary Type APG - Compact Right Angle Hollow Bore Type AFC - Compact Right Angle Shaft Type AFC - Right Angle Hollow Bore Type AF3 - Right Angle Shaft Type AF3 - Parallel Shaft Type AG3/AGA - Right Angle Shaft Type AH2 *Backlash differs depending on the series.	Based on the mounting space, decide on the compact parallel or planetary type APG. Since repeated stop precision is not required, determine 15 arc min for backlash.
Determining the reduction ratio	Determining the reduction ratio (i) $i = \frac{\text{Required Speed of Output Shaft}}{\text{Input Shaft Speed}}$	Required speed of output shaft $= \frac{30\times1000}{300\times\pi} \times \frac{250}{125} \approx 63.66$ r/min $i = \frac{63.66}{3000} \approx \frac{1}{47.12}$ Select 1/40 for the reduction ratio since the speed will exceed the servo motor rated speed of 3000 r/min if 1/50 is selected for the reduction ratio. Selected reduction ratio $i = \frac{1}{40}$
Examining the load torque	Calculating the actual load torque (T_{LE}) Service factor (Sf) in [Table-1] on page 941	Based on the load condition (light shock load) the service factor (Sf) is 1.25. $T_{LE} = 9.8 \times (100 + 5 \times 2 + 20) \times 0.2 \times \frac{300}{2\times1000} \times \frac{125}{250} \times 1.25 = 23.89$ N·m
Examining the inertia	Calculating the load's moment of inertia of gearbox input shaft equivalent (J_ℓ) Correction coefficient (C) in [Table-1] on page 942	Based on operation conditions, the correction coefficient (C) is 3. $J_\ell = \left(100 + \frac{1}{2} \times 5 \times 2 + 20\right) \times \left(\frac{300}{2\times1000}\right)^2 \times \left(\frac{125}{250}\right)^2 \times \left(\frac{1}{40}\right)^2 \times 3 = 0.00131836$ kg·m²
Examining the O.H.L.	Calculating the O.H.L. based on the actual load torque (T_{LE}) $\text{O.H.L.} = \frac{T_{LE} \times fb \times fw}{R}$ R : Pitch Circle Radius (m) of sprocket, pulley, gear, etc. attached to gearbox shaft fb: Coefficient for the connection method in [Table-1] on page 944 fw: Coefficient for the load level in [Table-2] on page 944 Correcting the tolerance based on the O.H.L. position [Table-1] on page 945	Based on the operation conditions, the coefficient for the connection method (fb) is 1.3, and the coefficient for the load level (fw) is 1.3. $\text{O.H.L.} = \frac{23.89 \times 1.3 \times 1.3}{\frac{125}{2\times1000}} = 645.99$ N The tolerance does not need to be corrected because the load position of the O.H.L. is at the middle of the shaft. * Please add values as needed if there are other factors that may affect the O.H.L. of the product, such as belt tension.
Tentative selection of a model	Based on the torque, the inertia, and the O.H.L., select a model that meets all conditions.	$T_{LE} \leq$ Motor rated output torque (N·m) in the Performance Table [for Calculation and Selection] on page 920 O.H.L. ≤ Allowable output shaft O.H.L. (N) <Performance Table> Select a model that meets these conditions. * When a tolerance for the load's moment of inertia is set for the servo motor itself, check it as well. Tentatively selected model **APGZ22K-40Q400△N** * A flange type code for servo motor mounting will be shown in △.

Selection Process Steps		Selection Examples
Examining the acceleration and deceleration torques	Check whether the torques required for accelerating and decelerating the load within the specified time are equal to or lower than the allowable peak torque of startup/stop of the tentatively selected model. [Figure-1] 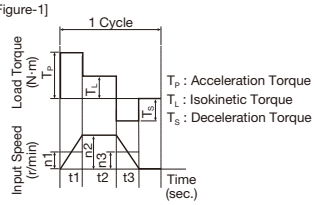 Acceleration Torque: $T_P = \dfrac{2\pi \times \frac{J_L}{C} \times n2}{60 \times t1 \times i_z} + \dfrac{T_{LE}}{Sf}$ Isokinetic Torque: $T_L = \dfrac{T_{LE}}{Sf}$ Deceleration torque: $T_S = \dfrac{2\pi \times \frac{J_L}{C} \times n2}{60 \times t3 \times i_z} - \dfrac{T_{LE}}{Sf}$ i_z: Actual Reduction Ratio <Performance Table>	Since the selected reduction ratio is 1/40, the servo motor speed at V = 30 m/min is 2547 r/min. [Operation conditions] Acceleration time t1: 0.2 sec. Input speed during acceleration n1: 1273.5 r/min Isokinetic time t2: 1.0 sec. Input speed during isokinetic operation n2: 2547 r/min Deceleration t3: 0.1 sec. Input speed during deceleration n3: 1273.5 r/min * The input speed during acceleration n1 and the input speed during deceleration n3 shall be the average value (n2/2) of the input speed during isokinetic operation n2. Performance values of the tentatively selected model APGZ22K-40Q400△N i_z: Actual reduction ratio … 1/40 Acceleration Torque $T_P = \dfrac{2\pi \times \frac{0.00131836}{3} \times 2547}{60 \times 0.2 \times \frac{1}{40}} + \dfrac{23.89}{1.25}$ = 42.6 N·m ≤ 144 N·m Allowable peak torque of startup/stop of the tentatively selected model APGZ22K-40Q400△N <Performance Table> Verdict: Acceptable Isokinetic Torque $T_L = \dfrac{23.89}{1.25}$ = 19.1 N·m Deceleration Torque $T_P = \dfrac{2\pi \times \frac{0.00131836}{3} \times 2547}{60 \times 0.1 \times \frac{1}{40}} - \dfrac{23.89}{1.25}$ = 27.8 N·m ≤ 144 N·m Allowable peak torque of startup/stop of the tentatively selected model APGZ22K-40Q400△N <Performance Table> Verdict: Acceptable
Examining the average load torque	Check whether the average load torque is equal to or lower than the allowable average torque of the tentatively selected model. Average Load Torque $T_M = \sqrt[3]{\dfrac{n_1 \times t_1 \times \lvert T_P \rvert^3 + n_2 \times t_2 \times \lvert T_L \rvert^3 + n_3 \times t_3 \times \lvert T_S \rvert^3}{n_1 \times t_1 + n_2 \times t_2 + n_3 \times t_3}}$	Average Load Torque $T_M = \sqrt[3]{\dfrac{1273.5 \times 0.2 \times \lvert 42.6 \rvert^3 + 2547 \times 1 \times \lvert 19.1 \rvert^3 + 1273.5 \times 0.1 \times \lvert 27.8 \rvert^3}{1273.5 \times 0.2 + 2547 \times 1 + 1273.5 \times 0.1}}$ = 23.9 N·m ≤ 40.7 N·m Allowable average torque of the tentatively selected model APGZ22K-40Q400△N <Performance Table> Verdict: Acceptable
Result of model selection	Decide on the tentatively selected model based on the judgment results of the acceleration, deceleration, and average load torques.	Since the judgment results of all of the acceleration, deceleration, and average load torqued are acceptable, select the model **APGZ22K-40Q400△N**. * A flange type code for servo motor mounting will be shown in △. If even one of the verdicts is unacceptable, reexamine a model with the next higher level of power, or reexamine the tentatively selected model by reducing the load torque and other conditions.

Service Factor/Allowable Moment of Inertia

Service Factor (Sf)

A gearbox is designed under the condition of operating for ten hours/day under a light shock load.
When you use a gearbox under a condition of a longer operation time under a heavier shock load, correct the load torque based on the service factor shown in the table below.

[Table-1]

Load Condition	Service Factor (Sf)			Application Example
	Operating for less than three hours/day	Operating for three to ten hours/day	Operating for more than ten hours/day	
Uniform load	1	1	1	Conveyors (uniform load), screens, agitators (low viscosity), water treatment machines (light load), machine tools (feed shafts), elevators, extruders, distillers
Light shock load	1	1	1.25	Conveyors (nonuniform or heavy load), agitators (high viscosity), machines for vehicles, water treatment machines (moderate load), hoists (light load), paper mills, feeders, food machines, pumps, sugar making machines, textile machines
Heavy shock load	1	1.25	1.5	Hoists (heavy load), hammer mills, metal working machines, crushers, tumblers

Allowable Moment of Inertia J

If a gearbox with a high inertia load is operated intermittently, high torque may be instantaneously produced when it starts to run (or when it stops if it is provided with a brake), resulting in an unexpected accident. Keep the level of the inertia of the application within the allowable value shown in the table below in accordance with the connection method and the frequency of startup.

APG/AFC Types

[Table-2]

Motor Power Class (W)	Allowable Moment of Inertia (Input Shaft Equivalent) ($\times 10^{-4}$kg·m^2)
100	1.6
150	2.4
200	3.2
400	6.4
600	9.6
750	12.0
1000	16.0
1500	24.0
2000	32.0
3000	48.0

Note: The power indicates the power designation of the model and type codes of the gearbox.

The allowable inertia values above are examples under the following conditions.
Inertia can be increased as long as the peak torque during start/stop does not exceed the allowable peak torque of each gearbox.
[Conditions]
・Acceleration from 0 to 5000 r/min
・Motor peak torque at 5000 r/min
・Acceleration time: 0.15 s

AG3/AGA/AH2/AF3 Types

■ Backlash 1 arc min/3 arc min Specifications

Motor Power Class (W)	Frame Size	Reduction Ratio	Allowable Moment of Inertia (Input Shaft Equivalent) ($\times 10^{-4}$kg·m^2)
100	15 (18)	1/10 to 1/120	2.5
200	25 (22)	1/10 to 1/60	5.0
	30 (28)	1/75 to 1/120	3.5
		1/150	2.2
		1/180	1.5
400	30 (28)	1/10 to 1/60	10.0
	35 (32)	1/75 to 1/120	7.0
		1/150	4.5
		1/180	3.1
750	35 (32)	1/10 to 1/60	16.3
	45 (40)	1/75 to 1/120	11.4
		1/150	7.3
		1/180	5.0
1000	35 (32)	1/10 to 1/60	16.3
2000	45 (40)	1/10 to 1/60	32.6

Note: The power indicates the power designation of the model and type codes of the gearbox.

■ Low Backlash

Motor Power Class (W)	Allowable Moment of Inertia (Input Shaft Equivalent) ($\times 10^{-4}$kg·m^2)
100	2.5
200	5
400	10
750	16.3
2000	32.6

Correction coefficient of moment of inertia J according to operating conditions

[Table-1]

Connection Method	Frequency of Startup	Correction Coefficient
When no looseness occurs because of direct coupling etc.	70 times/day max	1
	More than 70 times/day	1.5
When looseness occurs due to chain fastening etc.	70 times/day max	2
	More than 70 times/day	3

Method for Calculating the Moment of Inertia

■ Rotor's moment of inertia J

If the center of rotation is aligned with the center of gravity		If the center of rotation is not aligned with the center of gravity	
	SI Units		SI Units
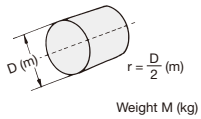	$J = \frac{1}{2} Mr^2$ (kg·m²)	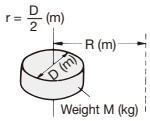	$J = \frac{1}{2} Mr^2 + MR^2$ (kg·m²)
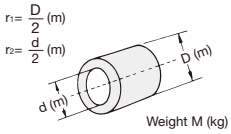	$J = \frac{1}{2} M(r_1^2 + r_2^2)$ (kg·m²)	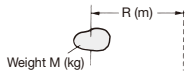	(If the size is negligible) $J = MR^2$ (kg·m²)

■ Moment of inertia J in linear motion

		SI Units
General case	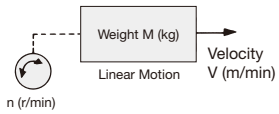	$J = \frac{1}{4} M \cdot \left(\frac{V}{\pi \cdot n}\right)^2$ (kg·m²)
In the case of horizontal linear motion (When moving an object with a lead screw)	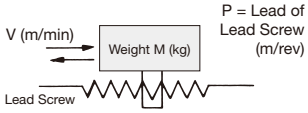	$J = \frac{1}{4} M \cdot \left(\frac{P}{\pi}\right)^2 = \frac{1}{4} M \cdot \left(\frac{V}{\pi \cdot n}\right)^2$ (kg·m²)
In the case of horizontal linear motion (Conveyor etc.)	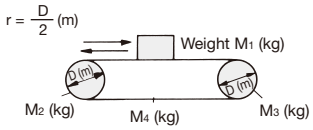	$J = M_1 r^2 + \frac{1}{2} M_2 r^2 + \frac{1}{2} M_3 r^2 + M_4 r^2$ (kg·m²)
In the case of vertical linear motion (Crane, winch, etc.)	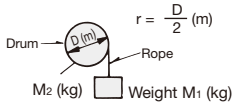	$J = M_1 r^2 + \frac{1}{2} M_2 r^2$ (kg·m²)

■ Conversion of the moment of inertia J when the speed ratio is available

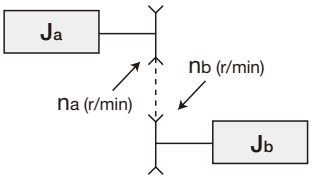

Convert the load's moment of inertia J_b into the equivalent value on the n_a shaft.

$$J = J_a + \left(\frac{n_b}{n_a}\right)^2 \times J_b$$

Overhung Load (O.H.L.)

Overhung Load (O.H.L.)

An overhung load (O.H.L.) is a suspending load imposed on a shaft. When a chain, belt, gear, etc. are used to couple the gearbox shaft with the machine working with it, this O.H.L. must be taken into consideration.

APG/AFC Types

$$\text{O.H.L.} = \frac{T_{LE}}{R} \times fb \times fw \text{ (N)}$$

- T_{LE} : Equivalent output torque acting on the gearbox shaft (N·m)
- R : Pitch circle radius (m) of the sprocket, pulley, gear, etc. attached to gearbox shaft
- fb : Refer to the coefficient for the connection method [Table-1].
- fw : Refer to the coefficient for the load level [Table-2].

Be sure to make the O.H.L. value calculated from the equation shown above smaller than the corrected O.H.L. Fx (page 945).

■ Connection Coefficient fb [Table-1]

Connection Method	fb
Timing belt	1.2
Gear, chain	1.3
V belt	2
Flat belt (with tension pulley)	3
Flat belt	4

■ Load Factor fw [Table-2]

Load Level	fw
Smooth operation without shock	1.2
Ordinary operation	1.3
Operation with vibration or shock load	2

AG3/GA/AH2/AF3 Types

$$\text{O.H.L.} = \frac{T_{LE} \times K_1 \times K_2}{R} \text{ (N)}$$

- T_{LE} : Equivalent output torque acting on the gearbox shaft (N·m)
- R : Pitch circle radius (m) of the sprocket, pulley, gear, etc. attached to gearbox shaft
- K_1 : Refer to the coefficient for the connection method [Table-3].
- K_2 : Refer to the coefficient for the load point [Table-4].

Be sure to make the O.H.L. value calculated from the equation shown above smaller than the allowable O.H.L. value listed in the performance table.

■ Coefficient K_1 [Table-3]

Connection Method	K_1
Chain, timing belt	1.00
Gear	1.25
V belt	1.50

■ Coefficient K_2 [Table-4]

Load Point	K_2
Base of the shaft	0.75
Middle of the shaft	1.00
End of Output Shaft	1.50

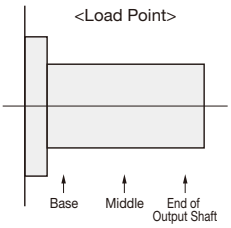

Correcting the tolerance based on the O.H.L. position

APG Type

(1) Point of O.H.L.
Allowable output shaft O.H.L. of the APG Type is calculated at the middle of the shaft.

(2) Correcting the allowable output shaft O.H.L.
Correct the allowable output shaft O.H.L. with the equation shown below in accordance with the conditions under which the motor will be used.

$$Fx = Fc \times \frac{A}{A+L}$$

- Fx : Corrected O.H.L. (N)
- Fc : Allowable Output Shaft O.H.L. (N)
- A : Parameter (mm)
- L : O.H.L. load point (amount of displacement from the middle of the shaft) (mm)

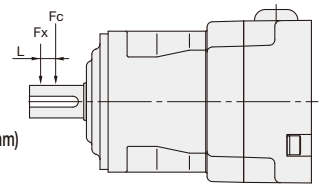

■ Constant A

[Table-1]

Frame Size	A (mm)
12	23.5
18	32
22	38.5
28	43.5

AFC Type

(1) Load point of O.H.L.
Allowable output shaft O.H.L. is calculated at Bmm from the flange surface.

(2) Correcting the load of the allowable output shaft O.H.L.
Correct the allowable output shaft O.H.L. with the equation shown below in accordance with the conditions under which the motor will be used.

a. When one end of the output shaft is not borne by a pillow

$$Fx = Fc \times \frac{C+B}{C+L}$$

- Fx : Corrected O.H.L. (N)
- Fc : Allowable Output Shaft O.H.L. (N)
- B : Parameter (mm)
- C : Parameter (mm)
- L : O.H.L. load point (distance from the flange surface) (mm)

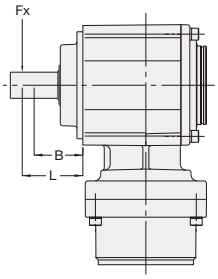

b. When one end of the output shaft is borne by a pillow

$$Fx = Fc \times \frac{R}{R-L}$$

- Fx : Corrected O.H.L. (N)
- Fc : Allowable Output Shaft O.H.L. (N)
- R : Distance from the flange surface to the center of the pillow (mm)
- L : O.H.L. load point (distance from the flange surface) (mm)

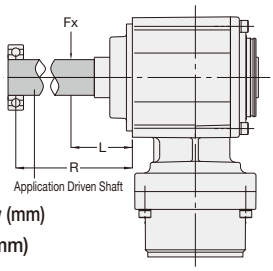

■ Constant B

(Load point of the allowable output shaft O.H.L.)

Frame Size	B (mm)
10	22
12	22
15	35
18	35
22	41
28	43.5
32	48.5

■ Constant C

Frame Size	C (mm)
10	45
12	50
15	52
18	58
22	68
28	78.5
32	91.5

AF3S Type <Backlash 1 arc min/3 arc min Specifications>

(1) Load point of O.H.L.
The load point of the allowable O.H.L. is calculated at 20 mm from the flange surface.

(2) Correcting the load of the allowable output shaft O.H.L.
Correct the allowable output shaft O.H.L. with the equation shown below in accordance with the conditions under which the motor will be used.

a. When one end of the output shaft is not borne by a pillow

If the load point M of the O.H.L. is more than 20 mm, adjust via:

Please correct using the following formula:

$$\text{Corrected O.H.L. (N)} = \frac{B+20}{B+M} \times \text{Allowable O.H.L. (N)}$$

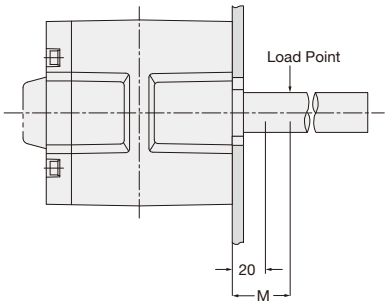

b. When one end of the output shaft is borne by a pillow

Please correct using the following formula:

$$\text{Corrected O.H.L. (N)} = \frac{R}{R-M} \times \text{Allowable O.H.L. (N)}$$

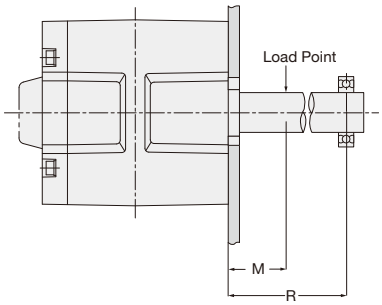

■ Constant B

Frame Size	B (mm)
15	55
25	56
30	61
35	70
45	85

AF3S Type <Low Backlash Specification>

(1) Load point of O.H.L.
The load point of the allowable O.H.L. is calculated to be 20 mm from the end of the output shaft.

(2) Correcting the load of the allowable output shaft O.H.L.
Correct the allowable output shaft O.H.L. with the equation shown below in accordance with the conditions under which the motor will be used.

a. When one end of the output shaft is not borne by a pillow

If the load point L of the O.H.L. is more than 20 mm,

$$\text{Corrected O.H.L. (N)} = \frac{A+20}{A+L} \times \text{Allowable O.H.L. (N)}$$

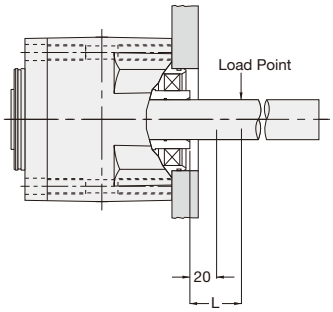

b. When one end of the output shaft is borne by a pillow

$$\text{Corrected O.H.L. (N)} = \frac{S}{S-L} \times \text{Allowable O.H.L. (N)}$$

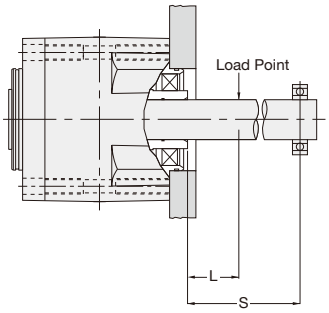

■ Constant A

Frame Size	A (mm)
20	73.5
25	90.5
30	98
35	114
45	136

Thrust Load

Use the motor under a condition that meets the equation shown below.

Thrust load (N) × fw ≤ Allowable output shaft thrust load (N) [fw: coefficient based on the load level]

■ Load factor fw

Load Level	fw
Smooth operation without shock	1.2
Ordinary operation	1.3
Operation with vibration or shock load	2

If an excessive thrust load is applied under the usage conditions, contact your nearest Sales Office or the CS Center.

Continuous Rated Input Torque of Gearboxes

If the rated speed of the servo motor is below 3000 r/min, be careful with the continuous rated torque of the servo motor. Select a gearbox whose continuous rated input torque (table below) is higher than the continuous rated torque of the servo motor.

Gearbox Power	Continuous Rated Input Torque (N·m)
100 W Class	0.32
150 W Class	0.48
200 W Class	0.64
400 W Class	1.3
600 W Class	1.9
750 W Class	2.4
1000 W Class	3.2
1500 W Class	4.8
2000 W Class	6.4
3000 W Class	9.6

Backlash Value

Backlash value is defined as the amount of return(converted to angle unit) to point zero upon applying a small torque (±5 % of the rated torque) on the output shaft whilst having the input shaft locked in, then releasing the output shaft.

Change of Position of Wrench Hole for Input Shaft Joint Tightening

Order Method

If you intend to use the wrench hole for input shaft joint tightening in a position other than the standard position, order it with the appropriate option code shown below.

Design	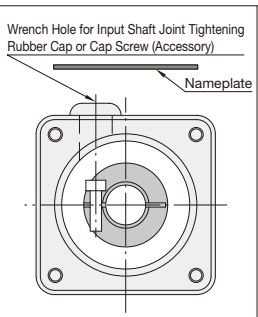	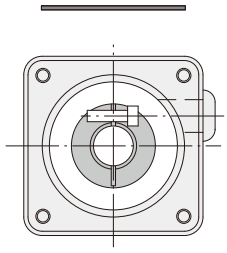	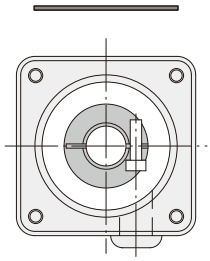	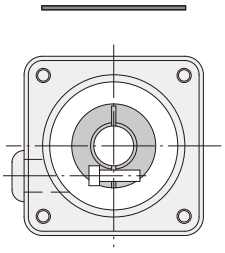
	Standard	Wrench Hole (Right)	Wrench Hole (Lower)	Wrench Hole (Left)
Option Code	Standard	B3	B6	B9

Note 1: All diagrams are views from the input side of the motor.
Note 2: Instructions not necessary if ordered standard.
Note 3: The side in which the nameplate is attached for a standard product shall be the standard position of the wrench hole for input shaft joint tightening.
Note 4: ▬ indicates the attachment position of the nameplate.

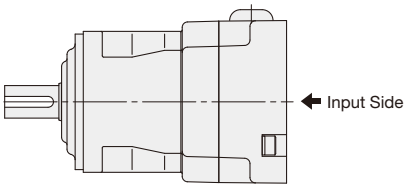

List of Applicable Models (AFC/AG3/AGA/AF3)

The APG Type can be installed by turning 90 ° because its four mounting holes are provided on the four corners of the square.
The AFC type is available for all models.
For AG3, AGA, and AF3 types, please refer to the table below.

■ Backlash 1 arc min/3 arc min Specifications

Power (W)	Frame Size	AF3 Type
100	18 (15)	△
200	22 (25)	○
	28 (30)	○
400	28 (30)	○
	32 (35)	○
750	32 (35)	○
	40 (45)	○
1000	32 (35)	○
2000	40 (45)	○

Note 1: The figures in the parentheses indicate the frame sizes of right angle hollow bore types.
Note 2: The model marked with "△" in the table is available only for a low wrench hole for input shaft joint tightening.
Note 3: The AGA type is available only in frame size 50.

■ Backlash 30 arc min Specification

Power (W)	Frame Size	AG3 Type/AGA Type
100	18 (20)	×
	22 (25)	×
200	18	×
	22 (25)	×
	28 (30)	×
400	22	○
	28 (30)	○
	32 (35)	○
750	28	○
	32 (35)	○
	40 (45)	○
2000	32	○
	40 (45)	○
	50	○

Precautions for Installation

Installation Place

Ambient Temperature	0 °C to 40 °C
Ambient Humidity	85 % or less
Altitude	1,000 m or lower
Installation Environment	A place free from corrosive gas, explosive gas, and/or vapor. Well ventilated place with no dust.

Take care to keep the surface temperature (area A) below 90 °C.
If the surface temperature exceeds 90 °C, cool it with an external fan or heat sink to keep it below 90 °C.

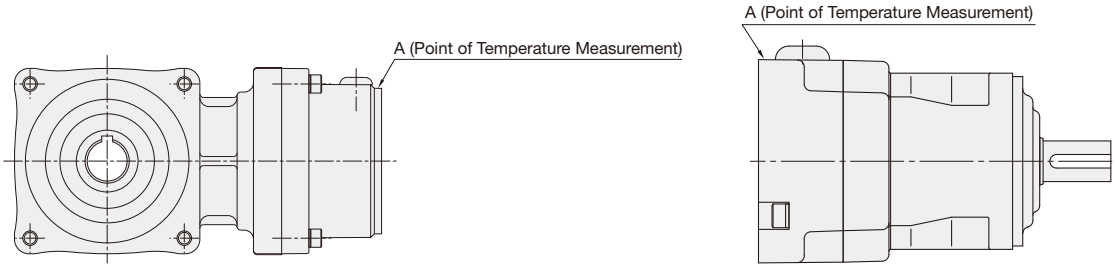

Installation Procedure

Fasten the gearmotor to a vibration-free, machined, flat surface using four bolts.
Make sure the flatness of the mounting surface is 0.1 mm or less.
If the foundation is unstable or the mounting surface is not flat enough, vibration may occur during operation and the service life of the gearbox may be shortened.

Installation Orientation

Adopt a grease lubrication method and can therefore be installed in any orientation.

Connection with application

1. H7 fit is recommended for a coupling, sprocket, pulley, gear, etc. to be attached to the gearbox shaft.
2. In direct coupling, accurately align the center of the gearbox shaft and that of the mating shaft.
3. In chain or gear engagement, keep the gearbox shaft and the mating shaft parallel accurately to each other, and install the device so that the line connecting the centers of both shafts is perpendicular to the shafts.
4. When attaching a coupling or application to the output shaft, do not apply strong impacts via hammer or similar tool. The bearing may get damaged and cause an abnormal sound, vibrations, or damage.
5. For solid shafts (without a key), use a friction-type coupling. Follow the instruction manual of the commercially available fastening device for the fastening procedure.

Option

ACCURATE GEARBOX
P.952 **Compact Flange**
P.953 **Output Shaft**

Option

Compact Flange

A compact flange is a flange mount fixture exclusively for right angle hollow bore (AFC). A compact flange is supplied with bolts for mounting it.

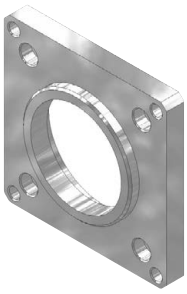

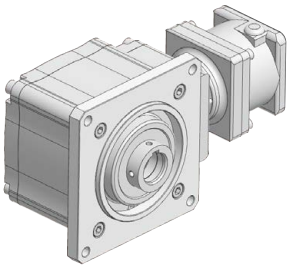

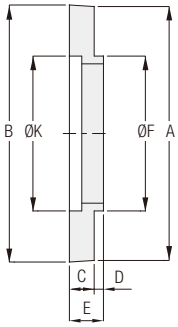

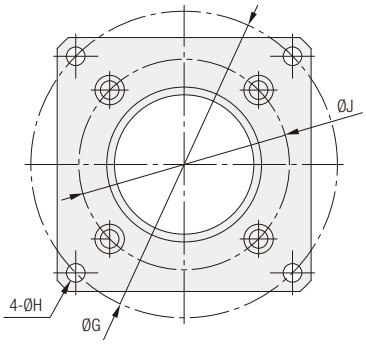

Part No.	Applicable Frame Size	A	B	C	D	E	F	G	H	J	K	Mounting Bolt (4 Pieces, Accessory)	Approx. Weight (g)	Material	Surface Treatment
CF-10	10	□76	(□77)	8	3	11	50h7	91	6	68	50H7	Hex Head Cap Screw M5 × 12	85	Aluminum Casting	No
CF-12	12	□82	(□83)	8	3	11	50h7	99	6	76	50H7	Hex Head Cap Screw M5 × 12	105		
CF-15	15	□90	(□91)	10	5	15	60h7	111	6	88	60H7	Hex Head Cap Screw M5 × 12	155		
CF-18	18	□108	(□109)	10.5	5	15.5	70h7	130	7	98	70H7	Hex Head Cap Screw M6 × 15	235		
CF-22	22	□134	(□135)	12.5	5	17.5	90h7	161	9	120	90H7	Hex Head Cap Screw M8 × 20	415		
CF-28	28	□152	(□153)	12.5	5	17.5	110h7	185	9	140	110H7	Hex Head Cap Screw M8 × 20	495		
CF-32	32	□172	(□173)	15	5	20	120h7	209	11	160	120H7	Hex Head Cap Screw M10 × 25	780		

Note 1: The mounting bolts are not provided with a spring washer, and if they become loose, use a screw locking adhesive etc. to keep them securely tightened.

Output Shaft Tapping (Threading)

If you desire output shaft tapping, we will prepare an output shaft manufactured to the dimensions shown in the table below. Designate these dimensions wherever possible at the time of design. To order tapping, enter "X40" at the end of the model name.

Note 1: Water-resistant specification stainless steel output shafts are not tapped.

Model example: Standard specification AH2LZ22L-5L200F1 ⇒ Output shaft with standard AH2LZ22L-5L200F1X40

Note 2: The mark "▲" in the table indicates that a lead time of about full 10 days is required.
Note 3: Water-resistant specification stainless steel output shafts and dimensions other than those shown in the table below are custom specifications.
Note 4: For lead time, prices, and other details, please contact your nearest Sales Office.
Note 5: The AH2 and AF3F Types are available only with low backlash specifications and require a delivery period of about full 10 days.
For precision 1 arc min and 3 arc min specifications, please contact your nearest Sales Office or the CS Center

Shaft Diameter (Frame Size)	Size × Pitch × Depth (mm)	AH2 Type (Right Angle Shaft)			AF3F Type (Concentric Right Angle Shaft)		
		L Shaft	R Shaft	T Shaft	L Shaft	R Shaft	T Shaft
18	M6 × 1.0 × 15	Not Available	Not Available	Not Available	▲	▲	▲
22/28	M8 × 1.25 × 20	▲	▲	▲	▲	▲	▲
32/40	M10 × 1.5 × 25	▲	▲	▲	▲	▲	▲
50	M12 × 1.75 × 30	▲	▲	▲	Not Available	Not Available	Not Available

■ AF3S Types (Right Angle Hollow Bore)/Output Shaft Hole Diameter Custom Specifications

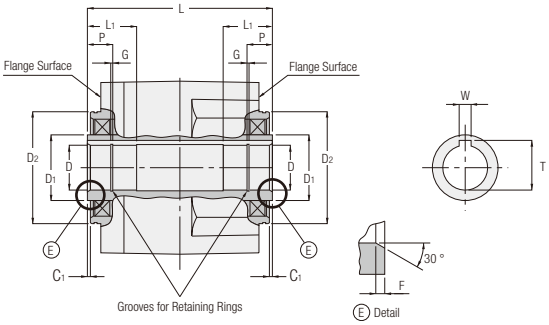

● Right Angle Hollow Bore Detailed Dimensions

Frame Size	Internal Diameter of Right Angle Hollow Bore	D (H8)	D_1	D_2 (h7)	W	T	L	L_1	P	C_1	F	G	Option Code
25	Ø20	Ø20	Ø39	Ø66	6	22.8	118	27	14	2	2	1.15	F2
30	Ø25	Ø25	Ø44	Ø75	8	28.3	124	33	17	2	2	1.35	F3
35	Ø30	Ø30	Ø49	Ø85	8	33.3	142	38	20	2	2	1.35	F4
45	Ø35	Ø35	Ø64	Ø100	10	38.3	168	50	26	2	2	1.75	F5
	Ø40	Ø40	Ø64	Ø100	12	43.3	168	50	26	2	2	1.95	F6

Note 4: The AF3S Type is available only with low backlash specifications.
For precision 1 arc min and 3 arc min specification products, please contact your nearest Sales Office or the CS Center.

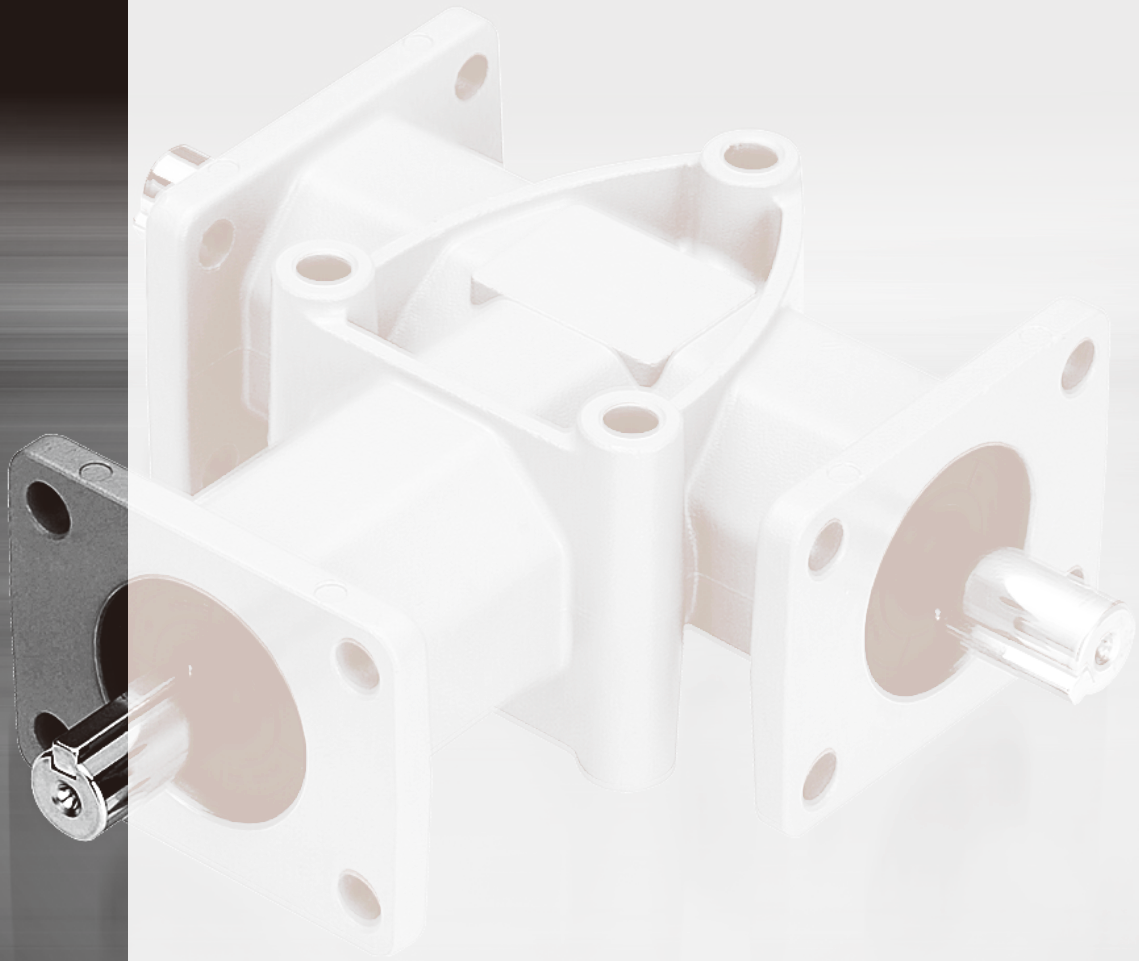

BEVEL GEARBOXES

P.955 **Bevel Gearboxes**

P.971 **Technical Documentation**

BEVEL GEARBOXES

Technical Documentation

BEVEL GEARBOXES

P.960 **1. Bevel Gearboxes K Type**

1-1. Performance Tables

1-2. Drawings

P.964 **2. Bevel Gearboxes KN Type**

2-1. Performance Tables

2-2. Drawings

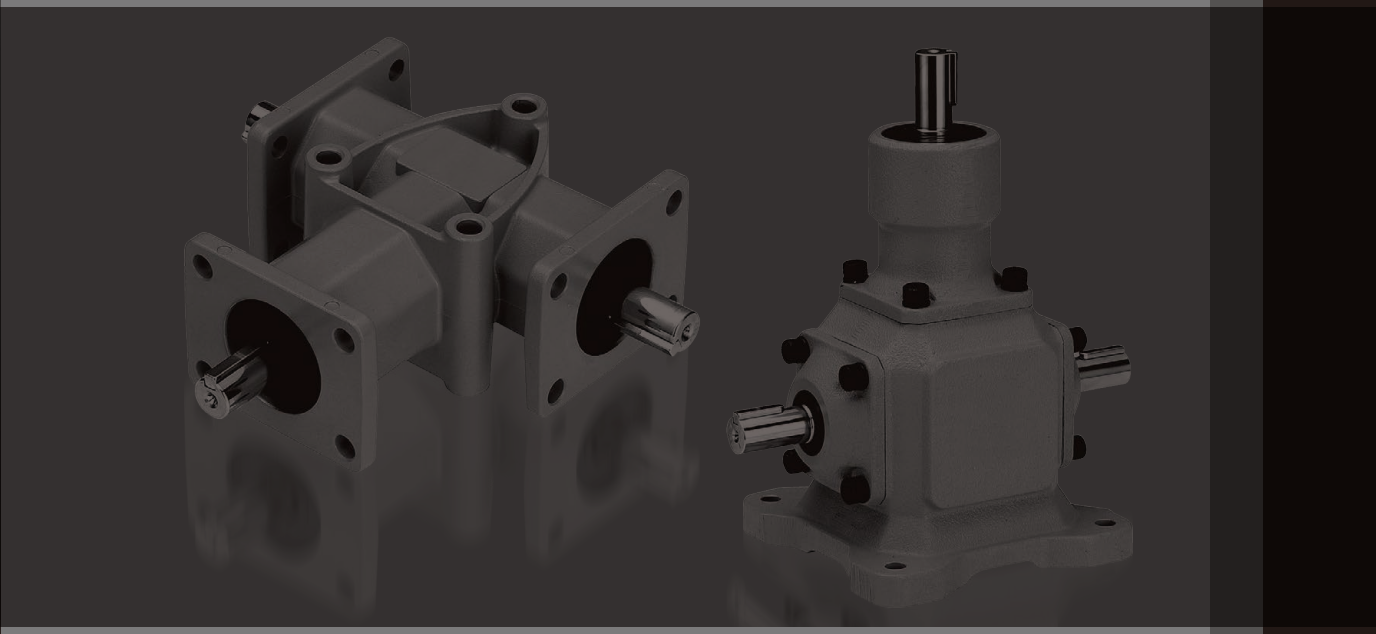

Standard Specification

Part Number		K Type	KN Type
Frame Size		10, 15, 20	19, 25, 32, 40
Reduction Ratio		1:1, 1:2	
Structure	Lubrication Type	Grease Lubrication	Oil Lubrication
	Case Material	Aluminum	Cast Iron
	Internal Gear	Spiral Bevel Gear	
Paint	Paint Color	Gray	
Mounting Direction		No limitation	Horizontal Type, Vertical Type (Note 1)
Ambient Conditions	Ambient Temperature	-10 °C to 40 °C	
	Ambient Humidity	80 % max	
	Altitude	1,000 m max	
	Installation Environment	A place free from corrosive gas, explosive gas, and/or vapor. Well ventilated place with no dust.	
	Installation Place	Indoors	

Note 1: For the shaft arrangements and shaft arrangement codes of horizontal and vertical types, please refer to page 958.

Model and Type Codes

K Type

Type Code	Type		Frame Size and Output Shaft Diameter		Reduction Ratio
K	B	–	10	–	1
K	C	–	15	–	2
①	②		③		④

①Type Code	K	: K Type
②Type	B	: Y-axis one direction
	C	: Y-axis two directions
③Frame Size and Output Shaft Diameter	10	: Ø10
	15	: Ø15
	20	: Ø20
④Reduction Ratio	1	: 1/1
	2	: 1/2 (reduction from X-axis to Y-axis)

KN Type

Type Code	Type		Frame Size and Output Shaft Diameter		Reduction Ratio	Shaft Arrangement Code
KN	B	–	19	–	1	HH1043
KN	C	–	32	–	2	HU2344
①	②		③		④	⑤

①Type Code	KN	: KN Type
②Type	B	: Y-axis one direction
	C	: Y-axis two directions
③Frame Size and Output Shaft Diameter	19	: Ø19
	25	: Ø25
	32	: Ø32
	40	: Ø40
④Reduction Ratio	1	: 1/1
	2	: 1/2 (reduction from X-axis to Y-axis)
⑤Shaft Arrangement Code	Shaft Arrangement Option Code For details, please refer to the list of shaft arrangements on page 958.	

■ Lubrication

The specified amount of lubricant is sealed in each bevel gearbox before shipment from our factory.

Model	Lubricant Type		Approx. Amount of Lubricant	Paint Color	Key Dimensions
K-10 Model	Grease	Class NLGI-0 containing Li-based extreme pressure additive	10 g	Gray	JIS key adopted JIS B 1301-1996 (plain form)
K-15 Model			30 g		
K-20 Model			50 g		
KN-19 Model	Oil	JIS Grade 2 industrial gear oil ISO VG150	0.3 L	Gray	JIS key adopted JIS B 1301-1996 (plain form)
KN-25 Model			0.7 L		
KN-32 Model			1.0 L		
KN-40 Model			1.5 L		

KN Model Shaft Arrangement Code

■ Shaft Arrangements and Shaft Arrangement Codes

The KN Type offers 24 standardized shaft arrangements, allowing flexible mounting according to output shaft direction and rotation.
Be sure to consider not only the type code but also a shaft arrangement.

[Notes]
- Each figure shows a mounting base and horizontal mounting (floor mounting).
- The rotational direction indicated by the arrow shows the rotation relationship between the shafts and does not limit the rotational direction. The shafts can rotate in the CW and CCW directions.
- The ▼ mark indicates the face provided with the oil filler port and the drain plug in horizontal mounting (floor mounting). In a figure without the mark, they are provided on the back face. (Standard specification)
- The bearing lubrication type is different in floor mounting in which the input shaft (X-axis) faces upward, except for “HU Type” shaft arrangements. Please inform us of the mounting method when placing an order.
- For use in mounting patterns other than mounting on a horizontal face, refer to page 977.

	KNB Model				KNC Model	
Horizontal Type (Top View)	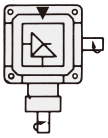 HH1043	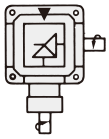 HH1044	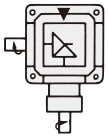 HH1033	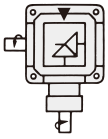 HH1034	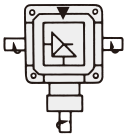 HH1343	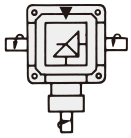 HH1344
Vertical Type (Front View)	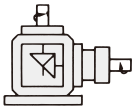 HH1022	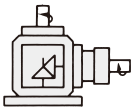 HH1025	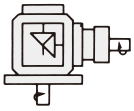 HH1052	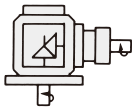 HH1055	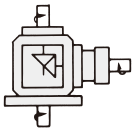 HH1252	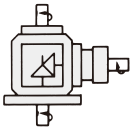 HH1255
	HU2043	HU2044	HU2033	HU2034	HU2343	HU2344
	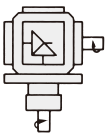 HD5043	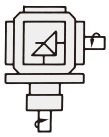 HD5044	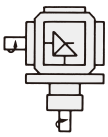 HD5033	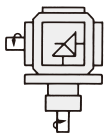 HD5034	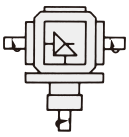 HD5343	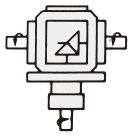 HD5344

MEMO

1. Bevel Gearboxes K Type

1-1. Performance Tables

[Notes]

- Be sure to use the bevel gearbox within the specified tolerances. Bevel gear boxes with a reduction ratio of 1:2 will be decelerated to the Y-axis.
- The values shown in this performance table are those when the service factor is 1. To use a bevel gearbox under other conditions, refer to the service factors shown in [Table-1] on page 972.
- The O.H.L. (overhung load) means the allowable load that may be applied to the middle area of the shaft length. To use a bevel gearbox under other conditions, refer to the coefficients K1 and K2 shown in [Table-2 and Table-3] on page 972.
- When a bevel gearbox type with a reduction ratio of 1:2 is used at increased speed (speed-up from the Y-axis to the X-axis), the X-axis torque will become 1/2 of the value (Y-axis torque) shown in the performance table.
- The Y-axis torque of the KC Type is the total value of the right and left shafts.
- The Y-axis O.H.L. of the KC Type is the total value of the right and left shafts.

Reduction Ratio	Part Number	Option Code	X-axis Rotational Speed (r/min)												Allowable Thrust Load (N) {kgf}	
			50	100	200	300	400	600	900	1200	1500	1800	2500	3600	X-axis	Y-axis
1 : 1	KB-101 KC-101	Allowable Transmission Capacity (kW)	0.01	0.02	0.05	0.07	0.09	0.14	0.20	0.26	0.31	0.35	0.38	0.44	59 {6}	69 {7}
		Allowable X/Y-axis Torque (N·m) {kgf·m}	2.35 {0.24}	2.35 {0.24}	2.25 {0.23}	2.25 {0.23}	2.16 {0.22}	2.16 {0.22}	2.06 {0.21}	2.06 {0.21}	1.96 {0.20}	1.86 {0.19}	1.47 {0.15}	1.18 {0.12}		
		Allowable X-axis O.H.L. (N) {kgf}	78 {8}	78 {8}	78 {8}	78 {8}	69 {7}	69 {7}	69 {7}	69 {7}	69 {7}	59 {6}	49 {5}	39 {4}		
		Allowable Y-axis O.H.L. (N) {kgf}	127 {13}	127 {13}	118 {12}	118 {12}	118 {12}	118 {12}	108 {11}	108 {11}	108 {11}	98 {10}	78 {8}	59 {6}		
	KB-151 KC-151	Allowable Transmission Capacity (kW)	0.05	0.09	0.18	0.27	0.35	0.51	0.75	0.96	1.16	1.30	1.44	1.66	98 {10}	118 {12}
		Allowable X/Y-axis Torque (N·m) {kgf·m}	8.82 {0.90}	8.82 {0.90}	8.62 {0.88}	8.53 {0.87}	8.33 {0.85}	8.13 {0.83}	7.94 {0.81}	7.64 {0.78}	7.35 {0.75}	6.86 {0.70}	5.49 {0.56}	4.41 {0.45}		
		Allowable X-axis O.H.L. (N) {kgf}	255 {26}	255 {26}	255 {26}	245 {25}	245 {25}	235 {24}	225 {23}	216 {22}	216 {22}	186 {19}	157 {16}	127 {13}		
		Allowable Y-axis O.H.L. (N) {kgf}	294 {30}	294 {30}	284 {29}	284 {29}	274 {28}	265 {27}	265 {27}	255 {26}	245 {25}	216 {22}	176 {18}	147 {15}		
	KB-201 KC-201	Allowable Transmission Capacity (kW)	0.09	0.18	0.36	0.52	0.68	0.95	1.38	1.78	2.15	2.50	2.55	2.95	196 {20}	274 {28}
		Allowable X/Y-axis Torque (N·m) {kgf·m}	17.6 {1.80}	17.6 {1.80}	17.2 {1.75}	16.7 {1.70}	16.2 {1.65}	15.2 {1.55}	14.7 {1.50}	14.2 {1.45}	13.7 {1.40}	13.2 {1.35}	9.80 {1.00}	7.84 {0.80}		
		Allowable X-axis O.H.L. (N) {kgf}	353 {36}	353 {36}	343 {35}	333 {34}	333 {34}	323 {33}	314 {32}	304 {31}	294 {30}	265 {27}	216 {22}	176 {18}		
		Allowable Y-axis O.H.L. (N) {kgf}	529 {54}	529 {54}	519 {53}	510 {52}	500 {51}	490 {50}	470 {48}	451 {46}	441 {45}	392 {40}	314 {32}	255 {26}		
1 : 2	KB-102 KC-102	Allowable Transmission Capacity (kW)	0.005	0.01	0.02	0.03	0.04	0.06	0.09	0.12	0.14	0.16	0.17	0.20	59 {6}	69 {7}
		Allowable Y-axis Torque (N·m) {kgf·m}	2.06 {0.21}	2.06 {0.21}	2.06 {0.21}	1.96 {0.20}	1.96 {0.20}	1.96 {0.20}	1.86 {0.19}	1.86 {0.19}	1.76 {0.18}	1.67 {0.17}	1.27 {0.13}	1.08 {0.11}		
		Allowable X-axis O.H.L. (N) {kgf}	88 {9}	88 {9}	88 {9}	88 {9}	88 {9}	78 {8}	78 {8}	78 {8}	78 {8}	69 {7}	59 {6}	49 {5}		
		Allowable Y-axis O.H.L. (N) {kgf}	137 {14}	137 {14}	137 {14}	127 {13}	127 {13}	127 {13}	127 {13}	118 {12}	118 {12}	108 {11}	88 {9}	69 {7}		
	KB-152 KC-152	Allowable Transmission Capacity (kW)	0.02	0.04	0.08	0.13	0.17	0.25	0.36	0.46	0.55	0.62	0.69	0.80	98 {10}	118 {12}
		Allowable Y-axis Torque (N·m) {kgf·m}	8.43 {0.86}	8.43 {0.86}	8.23 {0.84}	8.13 {0.83}	8.04 {0.82}	7.84 {0.80}	7.55 {0.77}	7.25 {0.74}	7.06 {0.72}	6.57 {0.67}	5.29 {0.54}	4.21 {0.43}		
		Allowable X-axis O.H.L. (N) {kgf}	255 {26}	255 {26}	255 {26}	245 {25}	245 {25}	235 {24}	225 {23}	216 {22}	216 {22}	186 {19}	157 {16}	127 {13}		
		Allowable Y-axis O.H.L. (N) {kgf}	294 {30}	294 {30}	284 {29}	284 {29}	274 {28}	265 {27}	265 {27}	255 {26}	245 {25}	216 {22}	176 {18}	147 {15}		
	KB-202 KC-202	Allowable Transmission Capacity (kW)	0.05	0.10	0.19	0.28	0.37	0.53	0.77	0.99	1.15	1.31	1.40	1.57	196 {20}	274 {28}
		Allowable Y-axis Torque (N·m) {kgf·m}	19.6 {2.00}	19.6 {2.00}	18.6 {1.90}	18.1 {1.85}	17.6 {1.80}	17.0 {1.73}	16.4 {1.67}	15.7 {1.60}	14.7 {1.50}	13.9 {1.42}	10.8 {1.10}	8.33 {0.85}		
		Allowable X-axis O.H.L. (N) {kgf}	372 {38}	372 {38}	363 {37}	363 {37}	353 {36}	343 {35}	333 {34}	323 {33}	314 {32}	274 {28}	235 {24}	186 {19}		
		Allowable Y-axis O.H.L. (N) {kgf}	588 {60}	588 {60}	578 {59}	568 {58}	559 {57}	539 {55}	529 {54}	510 {52}	490 {50}	441 {45}	363 {37}	294 {30}		

1-2. Drawings

KB Type

<Figure 1>

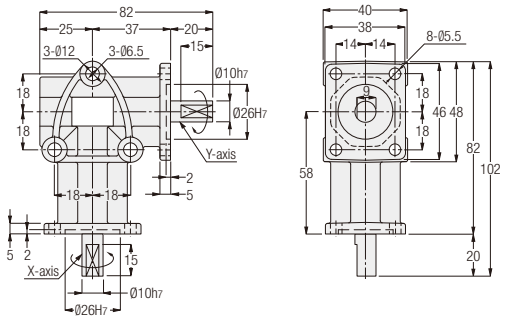

<Figure 2>

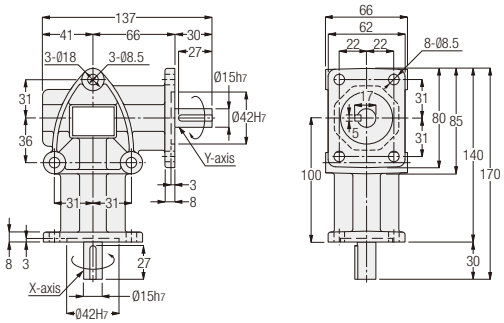

<Figure 3>

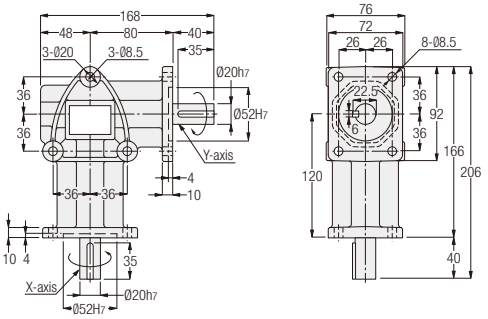

Part Number	Figure Number	Approx. Weight (kg)
KB-101	1	0.4
KB-102	1	0.4
KB-151	2	1.8
KB-152	2	1.8
KB-201	3	3.1
KB-202	3	3.1

Note 1: The rotational directions indicated by the arrows show the rotation relationship between the shafts and do not limit the rotational directions. The shafts can rotate in the CW and CCW directions.
Note 2: In the standard rotation relationship, the X-axis rotates in the CW direction, whereas the Y-axis rotates in the CCW direction.
Note 3: The phase of the key groove of the X-axis and that of the Y-axis do not always match.

KC Type

<Figure 1>

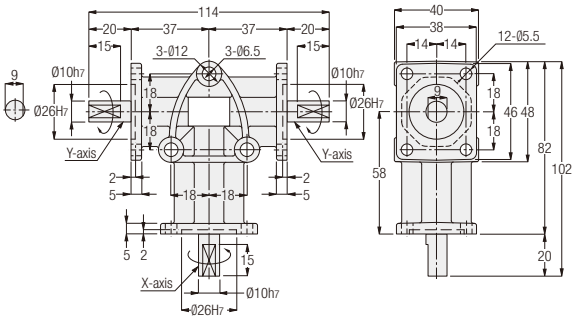

<Figure 2>

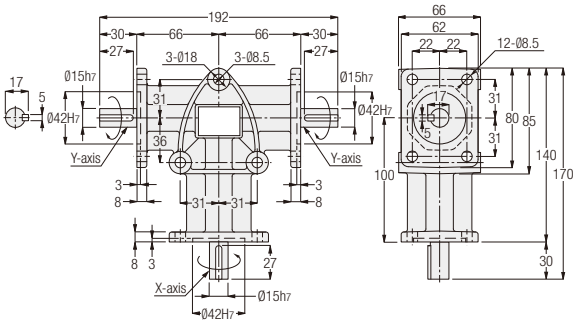

<Figure 3>

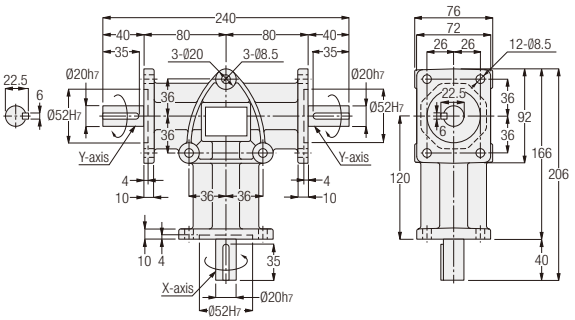

Part Number	Figure Number	Approx. Weight (kg)
KC-101	1	0.5
KC-102	1	0.5
KC-151	2	2.2
KC-152	2	2.2
KC-201	3	3.4
KC-202	3	3.4

Note 1: The rotational directions indicated by the arrows show the rotation relationship between the shafts and do not limit the rotational directions. The shafts can rotate in the CW and CCW directions.
Note 2: In the standard rotation relationship, the X-axis rotates in the CW direction, whereas the Y-axis rotates in the CCW direction.
Note 3: The phase of the key groove of the X-axis and that of the Y-axis do not always match.

MEMO

2. Bevel Gearboxes KN Type

2-1. Performance Tables

[Notes]

- Be sure to use the bevel gearbox within the specified tolerances. Bevel gear boxes with a reduction ratio of 1:2 will be decelerated to the Y-axis.
- The values shown in this performance table are those when the service factor is 1. To use a bevel gearbox under other conditions, refer to the service factors shown in [Table-1] on page 972.
- The O.H.L. (overhung load) means the allowable load that may be applied to the middle area of the shaft length. To use a bevel gearbox under other conditions, refer to the coefficients K1 and K2 shown in [Table-2 and Table-3] on page 972.
- When a bevel gearbox type with a reduction ratio of 1:2 is used at increased speed (speed-up from the Y-axis to the X-axis), the X-axis torque will become 1/2 of the value (Y-axis torque) shown in the performance table.
- The Y-axis torque of the KNC Type is the total value of the right and left shafts.
- The Y-axis O.H.L. of the KNC Type is the total value of the right and left shafts.
- The allowable thrust load will become half of each O.H.L. value.

Reduction Ratio	Part Number	Option Code	X-axis Rotational Speed (r/min)												
			20	50	100	200	300	400	600	900	1200	1500	1800	2500	3600
1 : 1	KNB-191 KNC-191	Allowable Transmission Capacity (kW)	0.08	0.20	0.39	0.77	1.15	1.50	2.05	2.67	3.30	3.95	4.40	4.40	4.40
		Allowable X/Y-axis Torque (N·m) {kgf·m}	37.2 {3.8}	37.2 {3.8}	37.2 {3.8}	36.3 {3.7}	36.3 {3.7}	36.3 {3.6}	32.3 {3.3}	28.4 {2.9}	26.5 {2.7}	24.5 {2.5}	23.5 {2.4}	16.7 {1.7}	10.8 {1.1}
		Allowable X-axis O.H.L. (N) {kgf}	1760 {180}	1760 {180}	1760 {180}	1760 {180}	1670 {170}	1620 {165}	1270 {130}	1080 {110}	882 {90}	833 {85}	784 {80}	686 {70}	637 {65}
		Allowable Y-axis O.H.L. (N) {kgf}	1960 {200}	1960 {200}	1960 {200}	1960 {200}	1960 {200}	1810 {185}	1470 {150}	1180 {120}	1030 {105}	980 {100}	931 {95}	784 {80}	735 {75}
1 : 2	KNB-192 KNC-192	Allowable Transmission Capacity (kW)	0.03	0.07	0.14	0.27	0.40	0.53	0.78	1.15	1.50	1.85	2.17	2.20	2.20
		Allowable X/Y-axis Torque (N·m) {kgf·m}	25.5 {2.6}	25.5 {2.6}	25.5 {2.6}	25.5 {2.6}	25.5 {2.6}	24.5 {2.5}	24.5 {2.5}	24.5 {2.5}	23.5 {2.4}	23.5 {2.4}	22.5 {2.3}	16.7 {1.7}	10.8 {1.1}
		Allowable X-axis O.H.L. (N) {kgf}	1180 {120}	1180 {120}	1180 {120}	1180 {120}	1180 {120}	1130 {115}	1130 {115}	1080 {110}	1080 {110}	882 {90}	833 {85}	784 {80}	735 {75}
		Allowable Y-axis O.H.L. (N) {kgf}	1760 {180}	1760 {180}	1760 {180}	1760 {180}	1760 {180}	1720 {175}	1670 {170}	1470 {150}	1270 {130}	1080 {110}	980 {100}	833 {85}	784 {80}
1 : 1	KNB-251 KNC-251	Allowable Transmission Capacity (kW)	0.25	0.62	1.24	2.47	3.68	4.70	6.40	8.60	10.5	12.3	13.8	—	—
		Allowable X/Y-axis Torque (N·m) {kgf·m}	118 {12.0}	118 {12.0}	118 {12.0}	118 {12.0}	116 {11.8}	112 {11.4}	101 {10.3}	91.1 {9.3}	83.3 {8.5}	78.4 {8.0}	73.5 {7.5}	—	—
		Allowable X-axis O.H.L. (N) {kgf}	3920 {400}	3920 {400}	3920 {400}	3920 {400}	3630 {370}	3330 {340}	2940 {300}	2450 {250}	2160 {220}	1960 {200}	1760 {180}	—	—
		Allowable Y-axis O.H.L. (N) {kgf}	4120 {420}	4120 {420}	4120 {420}	4120 {420}	4020 {410}	3920 {400}	3430 {350}	2940 {300}	2550 {260}	2450 {250}	2250 {230}	—	—
1 : 2	KNB-252 KNC-252	Allowable Transmission Capacity (kW)	0.09	0.23	0.45	0.90	1.34	1.78	2.67	4.00	5.30	6.33	7.50	7.50	—
		Allowable Y-axis Torque (N·m) {kgf·m}	85.3 {8.7}	85.3 {8.7}	85.3 {8.7}	85.3 {8.7}	85.3 {8.7}	84.3 {8.6}	84.3 {8.6}	84.3 {8.6}	84.3 {8.6}	80.4 {8.2}	79.4 {8.1}	56.8 {5.8}	—
		Allowable X-axis O.H.L. (N) {kgf}	3920 {400}	3920 {400}	3920 {400}	3920 {400}	3920 {400}	3720 {380}	3630 {370}	3530 {360}	3230 {330}	2740 {280}	2250 {230}	1670 {170}	—
		Allowable Y-axis O.H.L. (N) {kgf}	4120 {420}	4120 {420}	4120 {420}	4120 {420}	4020 {410}	3920 {400}	3820 {390}	3720 {380}	3430 {350}	3040 {310}	2650 {270}	2350 {240}	—

2-1. Performance Tables

Reduction Ratio	Part Number	Option Code	X-axis Rotational Speed (r/min)										
			20	50	100	200	300	400	600	900	1200	1500	1800
1 : 1	KNB-321 KNC-321	Allowable Transmission Capacity (kW)	0.36	0.88	1.77	3.53	5.26	6.72	9.15	12.3	15.0	17.5	19.7
		Allowable X/Y-axis Torque (N·m) {kgf·m}	167 {17.0}	167 {17.0}	167 {17.0}	167 {17.0}	165 {16.8}	160 {16.3}	144 {14.7}	130 {13.3}	119 {12.1}	112 {11.4}	104 {10.6}
		Allowable X-axis O.H.L. (N) {kgf}	4900 {500}	4900 {500}	4900 {500}	4900 {500}	4610 {470}	4210 {430}	3720 {380}	3140 {320}	2740 {280}	2450 {250}	2160 {220}
		Allowable Y-axis O.H.L. (N) {kgf}	5190 {530}	5190 {530}	5190 {530}	5190 {530}	5100 {520}	4900 {500}	4310 {440}	3720 {380}	3230 {330}	3140 {320}	2840 {290}
1 : 2	KNB-322 KNC-322	Allowable Transmission Capacity (kW)	0.13	0.32	0.64	1.28	1.91	2.54	3.80	5.72	7.57	9.05	10.7
		Allowable X/Y-axis Torque (N·m) {kgf·m}	123 {12.5}	123 {12.5}	123 {12.5}	123 {12.5}	122 {12.4}	122 {12.4}	121 {12.3}	121 {12.3}	120 {12.2}	115 {11.7}	114 {11.6}
		Allowable X-axis O.H.L. (N) {kgf}	4900 {500}	4900 {500}	4900 {500}	4900 {500}	4900 {500}	4700 {480}	4610 {470}	4410 {450}	4120 {420}	3430 {350}	2840 {290}
		Allowable Y-axis O.H.L. (N) {kgf}	5190 {530}	5190 {530}	5190 {530}	5190 {530}	5100 {520}	4900 {500}	4800 {490}	4700 {480}	4310 {440}	3820 {390}	3330 {340}
1 : 1	KNB-401 KNC-401	Allowable Transmission Capacity (kW)	0.62	1.59	3.18	6.32	9.50	12.0	16.1	22.0	26.5	—	—
		Allowable X/Y-axis Torque (N·m) {kgf·m}	294 {30.0}	294 {30.0}	294 {30.0}	294 {30.0}	294 {30.0}	284 {29.0}	255 {26.0}	231 {23.6}	211 {21.5}	—	—
		Allowable X-axis O.H.L. (N) {kgf}	9800 {1000}	9800 {1000}	9800 {1000}	7840 {800}	5880 {600}	4900 {500}	4410 {450}	3720 {380}	3430 {350}	—	—
		Allowable Y-axis O.H.L. (N) {kgf}	11760 {1200}	11760 {1200}	11760 {1200}	9800 {1000}	7350 {750}	6370 {650}	5880 {600}	5100 {520}	4020 {410}	—	—
1 : 2	KNB-402 KNC-402	Allowable Transmission Capacity (kW)	0.20	0.48	0.96	1.93	2.90	3.84	5.72	8.55	11.0	13.8	16.4
		Allowable Y-axis Torque (N·m) {kgf·m}	183 {18.7}	183 {18.7}	183 {18.7}	183 {18.7}	183 {18.7}	182 {18.6}	181 {18.5}	180 {18.4}	174 {17.8}	173 {17.6}	172 {17.5}
		Allowable X-axis O.H.L. (N) {kgf}	9800 {1000}	9800 {1000}	9800 {1000}	9800 {1000}	9800 {1000}	8820 {900}	7840 {800}	6860 {700}	5880 {600}	4900 {500}	3920 {400}
		Allowable Y-axis O.H.L. (N) {kgf}	11760 {1200}	11760 {1200}	11760 {1200}	11760 {1200}	11760 {1200}	9800 {1000}	8820 {900}	8820 {900}	8820 {900}	7840 {800}	6860 {700}

2-2. Drawings

KNB Type

Shaft Arrangement Code: HH1043 HH1044

<Figure 1>

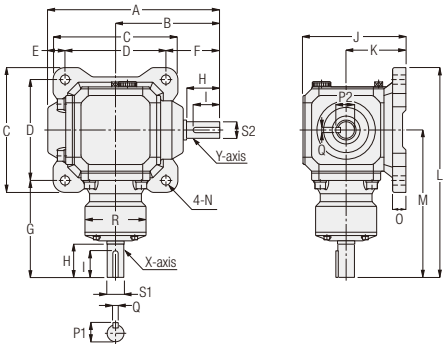

Shaft Arrangement Code: HH1033 HH1034

<Figure 2>

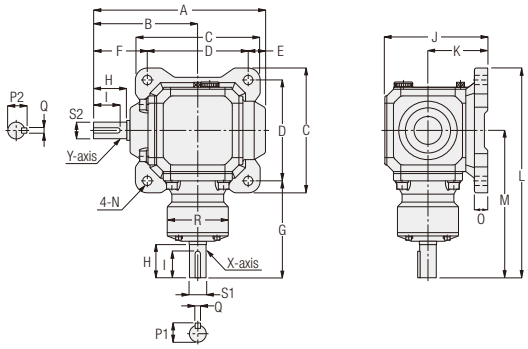

Part Number	A	B	C	D	E	F	G	H	I	J	K	L	M	N	O	P1	P2	Q	R	S1	S2	Approx. Weight (kg)
KNB-191	193	116	154	125	14.5	53.5	117.5	38	27	129	76	257	180	Ø10.5	17	21.5	21.5	6	Ø66	Ø19h6	Ø19h6	10
KNB-192	193	116	154	125	14.5	53.5	117.5	38	27	129	76	257	180	Ø10.5	17	20.5	21.5	6	Ø66	Ø18h6	Ø19h6	10
KNB-251	259	157	188	152	26	81	146	50	40	155	90	316	222	Ø14	20	28	28	8	Ø92	Ø25h6	Ø25h6	17
KNB-252	259	157	188	152	26	81	146	50	40	155	90	316	222	Ø14	20	28	28	8	Ø92	Ø25h6	Ø25h6	17
KNB-321	277	168	196	160	29	88	162	55	50	174	100	340	242	Ø14	20	35	35	10	Ø100	Ø32h6	Ø32h6	22
KNB-322	277	168	196	160	29	88	162	55	50	174	100	340	242	Ø14	20	35	35	10	Ø100	Ø32h6	Ø32h6	22
KNB-401	337	208	234	195	31.5	110.5	210.5	75	60	200	115	425	308	Ø14	22	43	43	12	Ø124	Ø40h6	Ø40h6	33
KNB-402	337	208	234	195	31.5	110.5	210.5	75	60	200	115	425	308	Ø14	22	43	43	12	Ø124	Ø40h6	Ø40h6	33

Note: The size of the oil cap for the oil filler port is PF1/2, and that for the oil drain port is PT1/4. (Standard specification)
Note: The phase of the key groove of the X-axis and that of the Y-axis do not always match.

Shaft Arrangement Code: HH1022 HH1025

<Figure 3>

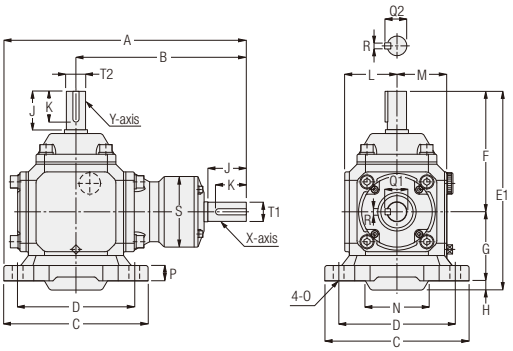

Shaft Arrangement Code: HH1052 HH1055

<Figure 4>

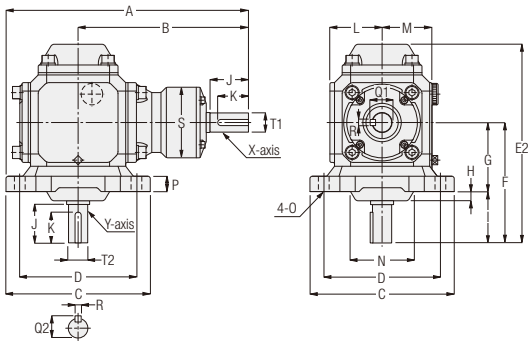

Part Number	A	B	C	D	E1	E2	F	G	H	I	J	K	L	M	N	O	P	Q1	Q2	R	S	T1	T2	Approx. Weight (kg)
KNB-191	257	180	154	125	192	191	116	76	—	40	38	27	56	53	—	Ø10.5	17	21.5	21.5	6	Ø66	Ø19h6	Ø19h6	10
KNB-192	257	180	154	125	192	191	116	76	—	40	38	27	56	53	—	Ø10.5	17	20.5	21.5	6	Ø66	Ø18h6	Ø19h6	10
KNB-251	316	222	188	152	259	259	157	90	12	67	50	40	68	65	Ø82.5	Ø14	20	28	28	8	Ø92	Ø25h6	Ø25h6	17
KNB-252	316	222	188	152	259	259	157	90	12	67	50	40	68	65	Ø82.5	Ø14	20	28	28	8	Ø92	Ø25h6	Ø25h6	17
KNB-321	340	242	196	160	277	277	168	100	9	68	55	50	77	74	Ø88.5	Ø14	20	35	35	10	Ø100	Ø32h6	Ø32h6	22
KNB-322	340	242	196	160	277	277	168	100	9	68	55	50	77	74	Ø88.5	Ø14	20	35	35	10	Ø100	Ø32h6	Ø32h6	22
KNB-401	425	308	234	195	337	337	208	115	14	93	75	60	88	85	Ø114.5	Ø14	22	43	43	12	Ø124	Ø40h6	Ø40h6	33
KNB-402	425	308	234	195	337	337	208	115	14	93	75	60	88	85	Ø114.5	Ø14	22	43	43	12	Ø124	Ø40h6	Ø40h6	33

Note: The size of the oil cap for the oil filler port is PF1/2, and that for the oil drain port is PT1/4. (Standard specification)
Note: The phase of the key groove of the X-axis and that of the Y-axis do not always match.

Shaft Arrangement Code: HU2043 HU2044

<Figure 1>

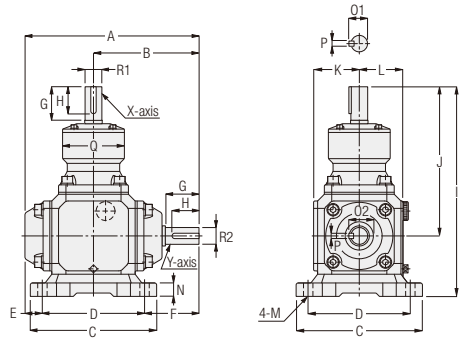

Shaft Arrangement Code: HU2033 HU2034

<Figure 2>

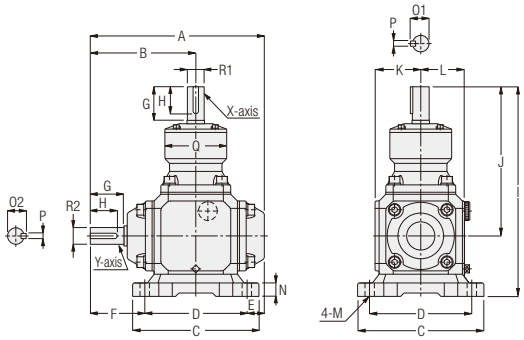

Part Number	A	B	C	D	E	F	G	H	I	J	K	L	M	N	O1	O2	P	Q	R1	R2	Approx. Weight (kg)
KNB-191	193	116	154	125	14.5	53.5	38	27	256	180	56	53	Ø10.5	17	21.5	21.5	6	Ø66	Ø19h6	Ø19h6	10
KNB-192	193	116	154	125	14.5	53.5	38	27	256	180	56	53	Ø10.5	17	20.5	21.5	6	Ø66	Ø18h6	Ø19h6	10
KNB-251	259	157	188	152	26	81	50	40	312	222	68	65	Ø14	20	28	28	8	Ø92	Ø25h6	Ø25h6	17
KNB-252	259	157	188	152	26	81	50	40	312	222	68	65	Ø14	20	28	28	8	Ø92	Ø25h6	Ø25h6	17
KNB-321	277	168	196	160	29	88	55	50	342	242	77	74	Ø14	20	35	35	10	Ø100	Ø32h6	Ø32h6	22
KNB-322	277	168	196	160	29	88	55	50	342	242	77	74	Ø14	20	35	35	10	Ø100	Ø32h6	Ø32h6	22
KNB-401	337	208	234	195	31.5	110.5	75	60	423	308	88	85	Ø14	22	43	43	12	Ø124	Ø40h6	Ø40h6	33
KNB-402	337	208	234	195	31.5	110.5	75	60	423	308	88	85	Ø14	22	43	43	12	Ø124	Ø40h6	Ø40h6	33

Note: The size of the oil cap for the oil filler port is PF1/2, and that for the oil drain port is PT1/4. (Standard specification)
Note: The phase of the key groove of the X-axis and that of the Y-axis do not always match.

Shaft Arrangement Code: HD5043 HD5044

<Figure 3>

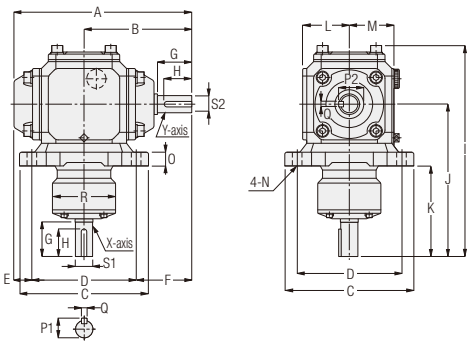

Shaft Arrangement Code: HD5033 HD5034

<Figure 4>

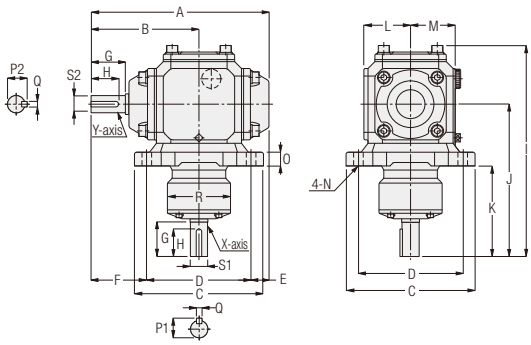

Part Number	A	B	C	D	E	F	G	H	I	J	K	L	M	N	O	P1	P2	Q	R	S1	S2	Approx. Weight (kg)
KNB-191	193	116	154	125	14.5	53.5	38	27	250	180	104	56	53	Ø10.5	17	21.5	21.5	6	Ø66	Ø19h6	Ø19h6	10
KNB-192	193	116	154	125	14.5	53.5	38	27	250	180	104	56	53	Ø10.5	17	20.5	21.5	6	Ø66	Ø18h6	Ø19h6	10
KNB-251	259	157	188	152	26	81	50	40	307.5	222	132	68	65	Ø14	20	28	28	8	Ø92	Ø25h6	Ø25h6	17
KNB-252	259	157	188	152	26	81	50	40	307.5	222	132	68	65	Ø14	20	28	28	8	Ø92	Ø25h6	Ø25h6	17
KNB-321	277	168	196	160	29	88	55	50	334.5	242	142	77	74	Ø14	20	35	35	10	Ø100	Ø32h6	Ø32h6	22
KNB-322	277	168	196	160	29	88	55	50	334.5	242	142	77	74	Ø14	20	35	35	10	Ø100	Ø32h6	Ø32h6	22
KNB-401	337	208	234	195	31.5	110.5	75	60	418	308	193	88	85	Ø14	22	43	43	12	Ø124	Ø40h6	Ø40h6	33
KNB-402	337	208	234	195	31.5	110.5	75	60	418	308	193	88	85	Ø14	22	43	43	12	Ø124	Ø40h6	Ø40h6	33

Note: The size of the oil cap for the oil filler port is PF1/2, and that for the oil drain port is PT1/4. (Standard specification)
Note: The phase of the key groove of the X-axis and that of the Y-axis do not always match.

KNC Type

Shaft Arrangement Code: HH1343 HH1344

<Figure 1>

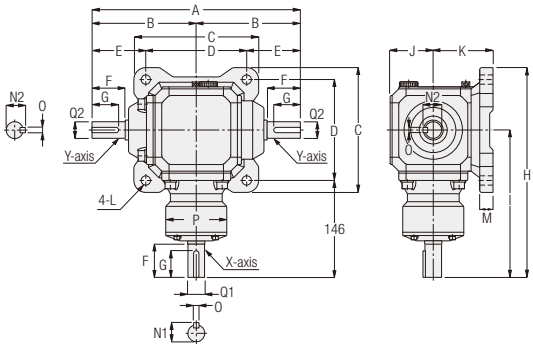

Part Number	A	B	C	D	E	F	G	H	I	J	K	L	M	N1	N2	O	P	Q1	Q2	Approx. Weight (kg)
KNC-191	232	116	154	125	53.5	38	27	257	180	53	76	Ø10.5	17	21.5	21.5	6	Ø66	Ø19h6	Ø19h6	10
KNC-192	232	116	154	125	53.5	38	27	257	180	53	76	Ø10.5	17	20.5	21.5	6	Ø66	Ø18h6	Ø19h6	10
KNC-251	314	157	188	152	81	50	40	316	222	65	90	Ø14	20	28	28	8	Ø92	Ø25h6	Ø25h6	18
KNC-252	314	157	188	152	81	50	40	316	222	65	90	Ø14	20	28	28	8	Ø92	Ø25h6	Ø25h6	18
KNC-321	336	168	196	160	88	55	50	340	242	74	100	Ø14	20	35	35	10	Ø100	Ø32h6	Ø32h6	23
KNC-322	336	168	196	160	88	55	50	340	242	74	100	Ø14	20	35	35	10	Ø100	Ø32h6	Ø32h6	23
KNC-401	416	208	234	195	110.5	75	60	425	308	85	115	Ø14	22	43	43	12	Ø124	Ø40h6	Ø40h6	34
KNC-402	416	208	234	195	110.5	75	60	425	308	85	115	Ø14	22	43	43	12	Ø124	Ø40h6	Ø40h6	34

Note: The size of the oil cap for the oil filler port is PF1/2, and that for the oil drain port is PT1/4. (Standard specification)
Note: The phase of the key groove of the X-axis and that of the Y-axis do not always match.

Shaft Arrangement Code: HU2343 HU2344

<Figure 2>

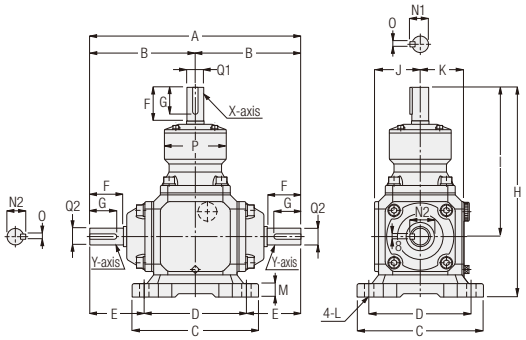

Part Number	A	B	C	D	E	F	G	H	I	J	K	L	M	N1	N2	O	P	Q1	Q2	Approx. Weight (kg)
KNC-191	232	116	154	125	53.5	38	27	256	180	56	53	Ø10.5	17	21.5	21.5	6	Ø66	Ø19h6	Ø19h6	10
KNC-192	232	116	154	125	53.5	38	27	256	180	56	53	Ø10.5	17	20.5	21.5	6	Ø66	Ø18h6	Ø19h6	10
KNC-251	314	157	188	152	81	50	40	312	222	68	65	Ø14	20	28	28	8	Ø92	Ø25h6	Ø25h6	18
KNC-252	314	157	188	152	81	50	40	312	222	68	65	Ø14	20	28	28	8	Ø92	Ø25h6	Ø25h6	18
KNC-321	336	168	196	160	88	55	50	342	242	77	74	Ø14	20	35	35	10	Ø100	Ø32h6	Ø32h6	23
KNC-322	336	168	196	160	88	55	50	342	242	77	74	Ø14	20	35	35	10	Ø100	Ø32h6	Ø32h6	23
KNC-401	416	208	234	195	110.5	75	60	423	308	88	85	Ø14	22	43	43	12	Ø124	Ø40h6	Ø40h6	34
KNC-402	416	208	234	195	110.5	75	60	423	308	88	85	Ø14	22	43	43	12	Ø124	Ø40h6	Ø40h6	34

Note: The size of the oil cap for the oil filler port is PF1/2, and that for the oil drain port is PT1/4. (Standard specification)
Note: The phase of the key groove of the X-axis and that of the Y-axis do not always match.

Shaft Arrangement Code: HH1252 HH1255

<Figure 1>

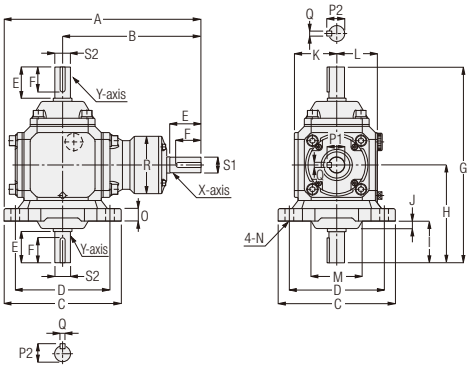

Part Number	A	B	C	D	E	F	G	H	I	J	K	L	M	N	O	P1	P2	Q	R	S1	S2	Approx. Weight (kg)
KNC-191	257	180	154	125	38	27	232	116	40	—	56	53	—	Ø10.5	17	21.5	21.5	6	Ø66	Ø19h6	Ø19h6	10
KNC-192	257	180	154	125	38	27	232	116	40	—	56	53	—	Ø10.5	17	20.5	21.5	6	Ø66	Ø18h6	Ø19h6	10
KNC-251	316	222	188	152	50	40	314	157	67	12	68	65	Ø82.5	Ø14	20	28	28	8	Ø92	Ø25h6	Ø25h6	18
KNC-252	316	222	188	152	50	40	314	157	67	12	68	65	Ø82.5	Ø14	20	28	28	8	Ø92	Ø25h6	Ø25h6	18
KNC-321	340	242	196	160	55	50	336	168	68	9	77	74	Ø88.5	Ø14	20	35	35	10	Ø100	Ø32h6	Ø32h6	23
KNC-322	340	242	196	160	55	50	336	168	68	9	77	74	Ø88.5	Ø14	20	35	35	10	Ø100	Ø32h6	Ø32h6	23
KNC-401	425	308	234	195	75	60	416	208	93	14	88	85	Ø114.5	Ø14	22	43	43	12	Ø124	Ø40h6	Ø40h6	34
KNC-402	425	308	234	195	75	60	416	208	93	14	88	85	Ø114.5	Ø14	22	43	43	12	Ø124	Ø40h6	Ø40h6	34

Note: The size of the oil cap for the oil filler port is PF1/2, and that for the oil drain port is PT1/4. (Standard specification)
Note: The phase of the key groove of the X-axis and that of the Y-axis do not always match.

Shaft Arrangement Code: HD5343 HD5344

<Figure 2>

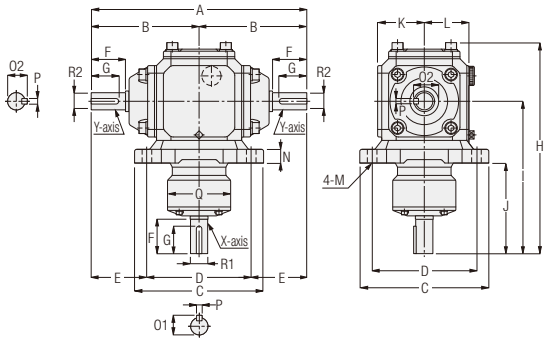

Part Number	A	B	C	D	E	F	G	H	I	J	K	L	M	N	O1	O2	P	Q	R1	R2	Approx. Weight (kg)
KNC-191	232	116	154	125	53.5	38	27	250	180	104	56	53	Ø10.5	17	21.5	21.5	6	Ø66	Ø19h6	Ø19h6	10
KNC-192	232	116	154	125	53.5	38	27	250	180	104	56	53	Ø10.5	17	20.5	21.5	6	Ø66	Ø18h6	Ø19h6	10
KNC-251	314	157	188	152	81	50	40	307.5	222	132	68	65	Ø14	20	28	28	8	Ø92	Ø25h6	Ø25h6	18
KNC-252	314	157	188	152	81	50	40	307.5	222	132	68	65	Ø14	20	28	28	8	Ø92	Ø25h6	Ø25h6	18
KNC-321	336	168	196	160	88	55	50	334.5	242	142	77	74	Ø14	20	35	35	10	Ø100	Ø32h6	Ø32h6	23
KNC-322	336	168	196	160	88	55	50	334.5	242	142	77	74	Ø14	20	35	35	10	Ø100	Ø32h6	Ø32h6	23
KNC-401	416	208	234	195	110.5	75	60	418	308	193	88	85	Ø14	22	43	43	12	Ø124	Ø40h6	Ø40h6	34
KNC-402	416	208	234	195	110.5	75	60	418	308	193	88	85	Ø14	22	43	43	12	Ø124	Ø40h6	Ø40h6	34

Note: The size of the oil cap for the oil filler port is PF1/2, and that for the oil drain port is PT1/4. (Standard specification)
Note: The phase of the key groove of the X-axis and that of the Y-axis do not always match.

MEMO

Technical Documentation

BEVEL GEARBOXES

P.972 Precautions for Selection
P.973 Selection Process Steps and Examples
P.975 Moment of Inertia of Gearbox
P.976 Precautions for Use
P.977 About the Machining

Precautions for Selection

Items Required for Selection

Load torque, motor type, input speed, reduction ratio, operation time, connection method, frequency of startup/stop

Selection Process Steps

1. The performance tables in the catalog show bevel gear boxes that use a motor and are designed under the condition of operating for 10 hours/day under a uniform load.

Thus, when you use a bevel gearbox under a condition of longer operation time under a heavier load, correct the load torque based on the service factor shown in [Table-1].

Corrected load torque = Load torque applied to the gearbox × Service factor

Service Factor (Sf) [Table-1]

Load Condition	Service Factor (Sf)		
	Operating for less than 3 hours/day	Operating for 3 to 10 hours/day	Operating for more than 10 hours/day
Uniform load	1 (1)	1 (1.25)	1.25 (1.50)
Light shock load	1 (1.25)	1.25 (1.50)	1.50 (1.75)
Heavy shock load	1.25 (1.50)	1.50 (1.75)	1.75 (2.00)

Note 1: When the number of startups and stops is 10 times or more an hour, use the coefficient in parentheses.
Note 2: Use the coefficient in parentheses also for a motor other than an electric motor (engine etc.)

Be sure to make the corrected load torque at the speed used smaller than the allowable X/Y-axis torque or the allowable Y-axis torque shown in the performance table.

2. Select a shaft arrangement from the shaft arrangement diagrams of each model.

3. Checking the overhung load (O.H.L.)

An overhung load (O.H.L.) is a suspending load imposed on a shaft. When a chain, belt, gear, etc. is used to couple the gearbox shaft with the application, the resulting O.H.L. must be taken into consideration.

$$\text{O.H.L.} = \frac{T_{LE} \times K_1 \times K_2}{R} \text{ (N) \{kgf\}}$$

T_{LE} : Corrected load torque imposed on the gearbox shaft (N·m) {kgf·m}
R : Pitch Circle Radius (m) of sprocket, pulley, gear, etc. attached to the gearbox shaft
K_1 : Refer to the coefficient for the connection method [Table-2].
K_2 : Refer to the coefficient for the load point [Table-3].

* Be sure to make the O.H.L. value calculated from the equation shown above smaller than the allowable X-axis and Y-axis O.H.L. values listed in the performance table.

■ Coefficient K_1 [Table-2]

Connection method	K_1
Chain, timing belt	1.00
Gear	1.25
V belt	1.50

■ Coefficient K_2 [Table-3]

Load Point	K_2
Base of the shaft	0.75
Middle of the shaft	1.00
End of Output Shaft	1.50

● Load Point

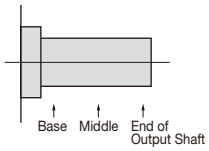

4. Select a model that meets all values specified in 1, 2, and 3 above.

Selection Process Steps and Examples

Selection Examples Selection Example 1

Application ····· Conveyor (uniform load)
Load Torque ····· 78.4 N·m {8 kgf·m}
X-axis Rotational Speed ·· 300 r/min
Reduction Ratio ····· 1 : 2
Shaft Arrangement ····· HH1044
Operation Time ····· 12 hours/day
Connection method ····· X-axis - Coupling
Y-axis - Chain (located on the center of the shaft)
Installation Method ····· Horizontal mounting
Installation Place ····· Indoors

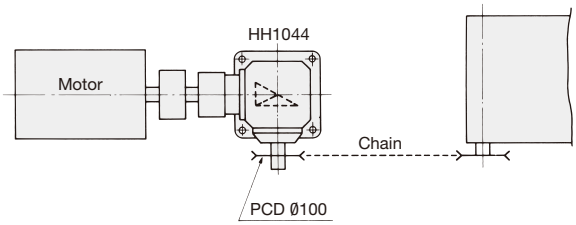

1. Examining the torque

From [Table-1] on page 972, the service factor Sf in a loaded state is 1.25. Thus, the corrected load torque imposed on the Y-axis is:

T_{LE} = 78.4 × 1.25 = 98 N·m {T_{LE} = 8 × 1.25 = 10 kgf·m}

2. Examining the O.H.L.

The load O.H.L. of the Y-axis is:

$$\text{O.H.L.} = \frac{T_{LE} \times K_1 \times K_2}{R} = \frac{98 \times 1 \times 1}{\frac{100}{2 \times 1000}} = 1960\ \text{N} \qquad \{\text{O.H.L.} = \frac{T_{LE} \times K_1 \times K_2}{R} = \frac{10 \times 1 \times 1}{\frac{100}{2 \times 1000}} = 200\ \text{kgf}\}$$

3. Determining a model

Select a model that meets the conditions, the torque, and the O.H.L. That is KNB-322 HH1044.

Selection Examples Selection Example 2

Application ..... Line shaft drive
Load Torque ..... All of loads A, B, and C are 58.8 N·m {6 kgf·m} (uniform load).
Speed ..... 600 r/min
Reduction Ratio ..... 1 : 1
Shaft Arrangement ..... As shown in the figure on the right
Operation Time ..... 8 hours/day
Connection method ..... All couplings
Installation Method ..... Horizontal mounting
Installation Place ..... Indoors

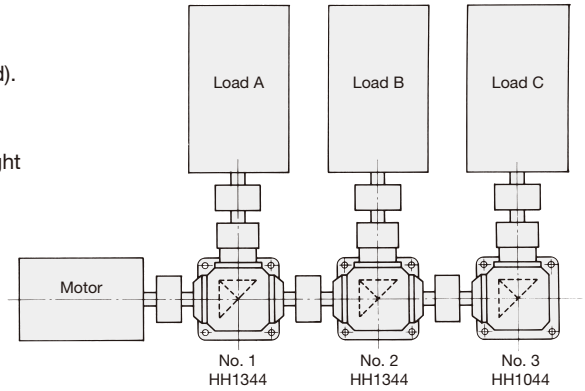

In the case of a line shaft drive, the load imposed on the Y-axis differs depending on the position of the gearbox. For this reason, it is necessary to select a gearbox for each line shaft drive. From [Table-1] on page 972, the service factor Sf for all gear boxes based on the condition is 1.0.

1. Gearbox No. 1

Thus, since only load A is to be operated, the corrected load torque imposed on the X-axis is:

58.8 × 1.0 = 58.8 N·m {6×1.0 = 6 kgf·m}

Since loads A, B, and C are to be operated, the corrected load torque imposed on the Y-axis is:

(58.8 + 58.8 + 58.8) × 1.0 = 176.4 N·m
{(6 + 6 + 6) × 1.0 = 18 kgf·m}

From the performance table, select KNC-401 HH1344.

2. Gearbox No. 2

Since only load B is to be operated, the corrected load torque imposed on the X-axis is:

58.8 × 1.0 = 58.8 N·m {6×1.0 = 6 kgf·m}

Since loads B and C are to be operated, the corrected load torque imposed on the Y-axis is:

(58.8 + 58.8) × 1.0 = 117.6 N·m
{(6 + 6) × 1.0 = 12 kgf·m}

From the performance table, select KNC-321 HH1344.

3. Gearbox No. 3

Since only load C is to be operated, the corrected load torque imposed on the X-axis is:

58.8 × 1.0 = 58.8 N·m {6×1.0 = 6 kgf·m}

Since only load C is to be operated, the corrected load torque imposed on the Y-axis is:

58.8 × 1.0 = 58.8 N·m {6×1.0 = 6 kgf·m}

From the performance table, select KNB-251 HH1044.

4. Determining models

Gearbox No. 1 KNC-401 HH1344
Gearbox No. 2 KNC-321 HH1344
Gearbox No. 3 KNB-251 HH1044

Moment of Inertia of Gearbox

■ Moment of Inertia of Gearbox {GD²} (X-axis Equivalent)

● K Type

Reduction Ratio	Type Code	Moment of Inertia ($\times10^{-4}$kg·m²)	{GD² ($\times10^{-4}$kg·m²)}
1:1	KB-101	0.045	0.18
	KC-101	0.048	0.19
	KB-151	0.53	2.1
	KC-151	0.56	2.2
	KB-201	1.8	7.2
	KC-201	1.9	7.8
1:2	KB-102	0.022	0.086
	KC-102	0.022	0.089
	KB-152	0.37	1.5
	KC-152	0.37	1.5
	KB-202	0.79	3.1
	KC-202	0.82	3.3

● KN Type

Reduction Ratio	Type Code	Moment of Inertia ($\times10^{-4}$kg·m²)	{GD² ($\times10^{-4}$kg·m²)}
1:1	KNB-191	4.0	16.0
	KNC-191	4.1	16.2
	KNB-251	24.8	99.3
	KNC-251	25.0	100
	KNB-321	40.0	160
	KNC-321	40.8	163
	KNB-401	89.5	358
	KNC-401	92.0	368
1:2	KNB-192	1.9	7.4
	KNC-192	1.9	7.5
	KNB-252	10.3	41.3
	KNC-252	10.4	41.6
	KNB-322	12.9	51.7
	KNC-322	13.1	52.4
	KNB-402	38.3	153
	KNC-402	38.8	155

Precautions for Use

1. Installation Location

Ambient Temperature	–10 °C to 40 °C
Ambient Humidity	80 % max
Installation Environment	A place free from corrosive gas, explosive gas and/or vapor. Well ventilated place with no dust.
Installation Place	Indoors

2. Installation Surface

- Secure the bevel gearbox with bolts on a vibration-free and flat machine-processed surface.

3. Connection with application

- Some gearbox models have a shaft without a step. Thus, when attaching a coupling, sprocket, pulley, gear, etc. to such a shaft, take care not to allow them to interfere with the oil seal or case surface. In addition, H7 fit is recommended for a hole.
- In direct coupling, accurately align the center of the gearbox shaft from the mating shaft.
- In chain, belt, or gear engagement, keep the gearbox shaft and the mating shaft parallel to each other accurately, and install the device so that the line connecting the centers of both shafts is perpendicular to the shafts.

4. Precautions for Operation

- Be sure to operate the bevel gearbox with the load torque and the O.H.L. kept within the tolerances.
- CW and CCW rotations by plucking adversely affect the gearbox and the application. To prevent this, temporarily stop the gearbox, and then start it in the reverse direction.

About the Machining

■ When machining for adding an oil plug R1/4 to a standard specification is required

The designs the positions of oil filler ports and oil drain ports assuming horizontal surface mounting (floor mounting) as a standard specification.

Our bevel gear boxes can be mounted not only on horizontal surfaces but also on ceiling surfaces, wall surfaces, etc. When you intend to use and mount a bevel gearbox on a surface other than a horizontal surface, an oil plug R1/4 can be added to any of faces A, B, C, and D shown in [Figure-1] as a special order. When placing an order for an oil plug R1/4, designate face A, B, C, or D.

* For machine work of adding an oil plug, please contact your nearest Sales Office or the CS Center.

● Standard Specification

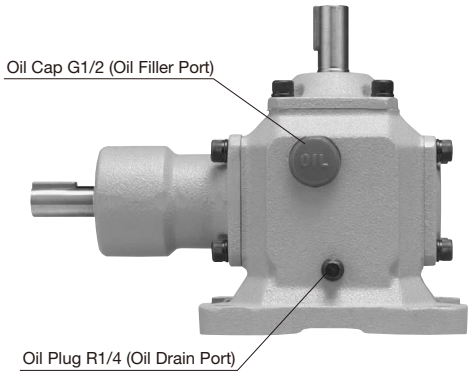

● Positions for adding an oil plug R1/4

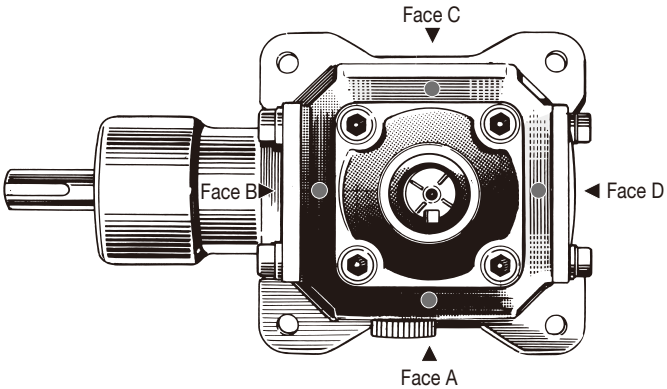

An oil plug PT1/4 can be added to the positions marked with ●.

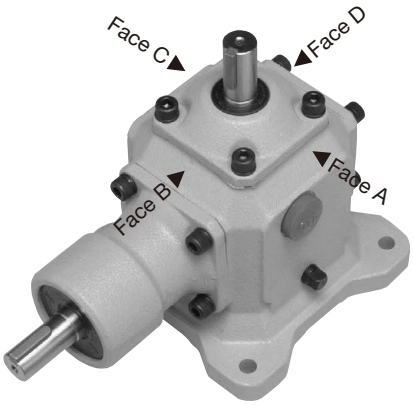

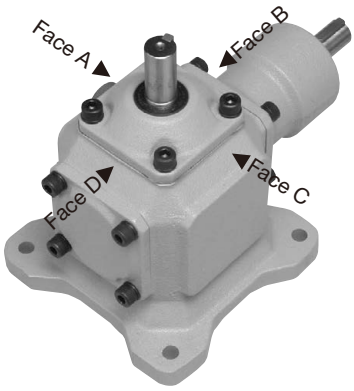

[Figure-1]

* The face of the standard specification provided with an oil cap is assumed to be face A, and the faces clockwise from face A are B, C, and D when viewed from the top.

TECHNICAL DOCUMENTATION, INDEX

P.979 **Technical Documentation**
P.1005 **Option**
P.1019 **Index**

Technical Documentation

P.980 How to read the Nameplate
P.981 Output Shaft Detailed Dimensions
P.986 Output Shaft Peripheral Dimensions
P.992 Right Angle Hollow Bore Safety Cover Detailed Dimensions
P.993 Concentric Right Angle Hollow Bore Safety Cap Detailed Dimensions
P.996 Frame Sizes for Concentric Right Angle Hollow Bore/Concentric Right Angle Shaft
P.997 Installation and Removal for Right Angle Hollow Bore
P.1002 Torque Arm

How to read the Nameplate

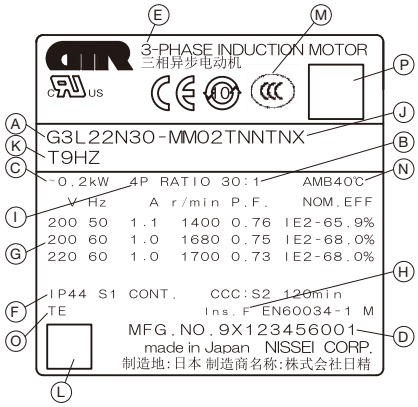

Ⓐ Product Model Name
Ⓑ Reduction Ratio
Ⓒ Motor Power
Ⓓ Manufacturing Number
Ⓔ Number of Phases
Ⓕ Protective Structure/Rating
Ⓖ Rated Values
Ⓗ Insulation Class
Ⓘ Number of Motor Poles
Ⓙ Option (X)
Ⓚ Option Code
Ⓛ QR Code (Internal Control Code)
Ⓜ Global Standards Conformance Marks
Ⓝ Ambient Temperature
Ⓞ Motor Structure
Ⓟ QR Code (for Access to Product Information)

How to Read the Manufacturing Number

1 X 1 2 3 4 5 6 0 0 1

- Serial Number
- Our Control Number
- Month of Manufacture
  - 1 : January
    to
  - 9 : September
  - X : October
  - Y : November
  - Z : December
- Year of Manufacture 1: 2021
  (Last digit of the year)

Output Shaft Detailed Dimensions

Parallel Shaft, Right Angle Shaft

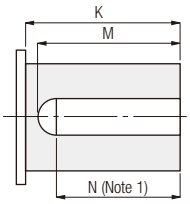

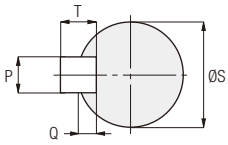

■ G/G3/GA/H/H2/FF/F2F/F3F/VG (Except 50W)/VH/VF3F Types

Dimension / Frame Size	K	M	N	S (h6)		Key				Q
						P (h9)		T		
12	22	20	18	12	0 -0.011	4	0 -0.030	4	0 -0.030	2.5
15	27	24	21.5	15	0 -0.011	5	0 -0.030	5	0 -0.030	3
18	30	27	24	18	0 -0.011	6	0 -0.030	6	0 -0.030	3.5
22	40	35	32	22	0 -0.013	6	0 -0.030	6	0 -0.030	3.5
28	45	40	36	28	0 -0.013	8	0 -0.036	7	0 -0.090	4
32	55	50	45	32	0 -0.016	10	0 -0.036	8	0 -0.090	5
40	65	60	54	40	0 -0.016	12	0 -0.043	8	0 -0.090	5
50	75	70	63	50	0 -0.016	14	0 -0.043	9	0 -0.090	5.5

Note 1: Dimension N is the key length for an output shaft made of stainless steel.

■ VG (only 50W) Type

Dimension / Frame Size	K	M	S (h7)		Key				Q
					P (h9)		T		
12	22	20	12	0 -0.018	4	0 -0.030	4	0 -0.030	2.5
15	25	22	15	0 -0.018	5	0 -0.030	5	0 -0.030	3

■ APG/AG3/AGA/AH2/AF3F Types

Dimension / Frame Size	K	M	S (h6)		Key				Q
					P (h9)		T		
12	20	18	12	0 -0.011	4	0 -0.030	4	0 -0.030	2.5
15	30	24	15	0 -0.011	5	0 -0.030	5	0 -0.030	3
18	30	27	18	0 -0.011	6	0 -0.030	6	0 -0.030	3.5
22	40	35	22	0 -0.013	6	0 -0.030	6	0 -0.030	3.5
28	45	40	28	0 -0.013	8	0 -0.036	7	0 -0.090	4
32	55	50	32	0 -0.016	10	0 -0.036	8	0 -0.090	5
40	65	60	40	0 -0.016	12	0 -0.043	8	0 -0.090	5
50	75	70	50	0 -0.016	14	0 -0.043	9	0 -0.090	5.5

■ F2 (F2S) Type

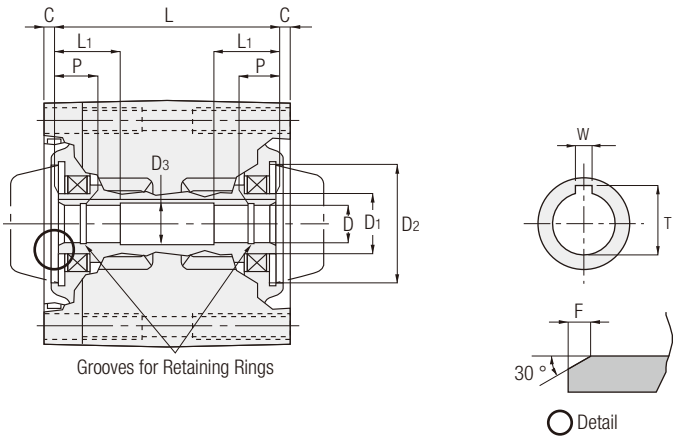

Frame Size	D (H8)	D_1	D_2 (H8)	D_3	W	T	L	L_1	P	C	F
12	Ø12	Ø20	Ø39	Ø13	4	13.8	70	20	8	5.5	2
15	Ø15	Ø24	Ø39	Ø16	5	17.3	88	21	9	4	2

Note 1: The key groove dimensions and tolerances for output shafts comply with JIS B1301-1996 parallel keys (plain form).
Note 2: The key for the output shaft is not included.
Note 3: The retaining rings comply with JIS B2804-2010.
Note 4: The retaining rings are not included.

■ FS/FAS Type

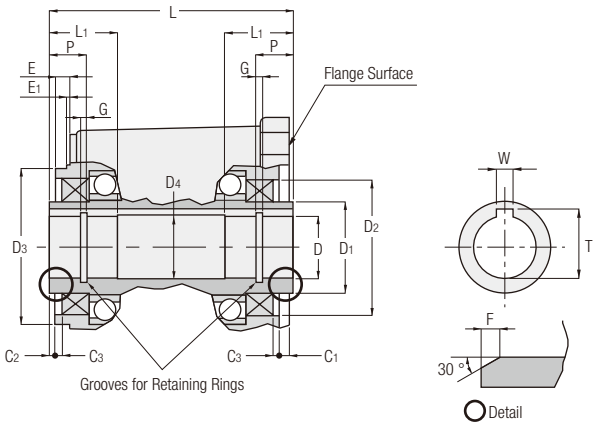

Frame Size	D (H8)	D_1	D_2 (H8)	D_3 (h8)	D_4	W	T	L	L_1	P	C_1	C_2	C_3	E	E_1	F	G
20	Ø20	Ø29	Ø46	Ø53	Ø21	6	22.8	91	24	13	1	2	3	8	0	2	1.15
25	Ø25	Ø39	Ø58	Ø66	Ø26	8	28.3	108	27	14	6	2	3	6	0	2	1.35
30	Ø30	Ø44	Ø65	Ø75	Ø31	8	33.3	117	33	17	5	2	3	7	0	2	1.35
35	Ø35	Ø49	Ø72	Ø85	Ø36	10	38.3	124	38	20	3	2	3	7	0	2	1.75
45	Ø45	Ø64	Ø85	Ø100	Ø46	14	48.8	140	50	26	3	2	3	6	0	2	1.95
55	Ø55	Ø79	Ø100	Ø120	Ø56	16	59.3	181	61	32	5	2	5	10	2	2	2.20

Note 1: The key groove dimensions and tolerances for output shafts comply with JIS B1301-1996 parallel keys (plain form).
Note 2: The key for the output shaft is not included.
Note 3: The retaining rings comply with JIS B2804-2010.
Note 4: The retaining rings are not included.

■ F3S Type/VF3S Type

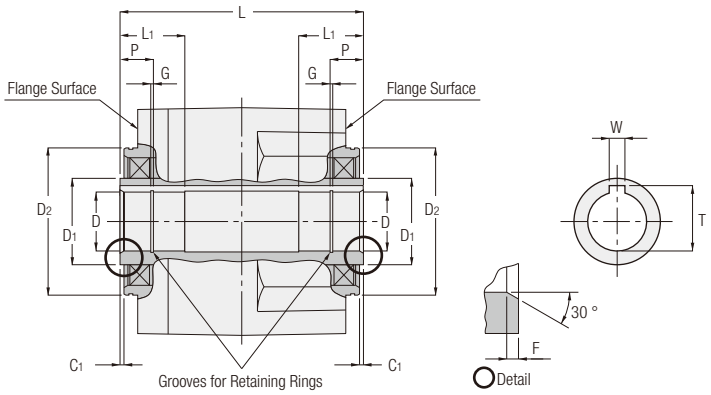

Frame Size	D (H8)	D_1	D_2 (h7)	W	T	L	L_1	P	C_1	F	G
20	Ø20	Ø29	Ø53	6	22.8	96	24	13	2	2	1.15
25	Ø25	Ø39	Ø66	8	28.3	118	27	14	2	2	1.35
30	Ø30	Ø44	Ø75	8	33.3	124	33	17	2	2	1.35
35	Ø35	Ø49	Ø85	10	38.3	142	38	20	2	2	1.75
45	Ø45	Ø64	Ø100	14	48.8	168	50	26	2	2	1.95

Note 1: The key groove dimensions and tolerances for output shafts comply with JIS B1301-1996 parallel keys (plain form).
Note 2: The key for the output shaft is not included.
Note 3: The retaining rings comply with JIS B2804-2010.
Note 4: The retaining rings are not included.

■ AFC Type

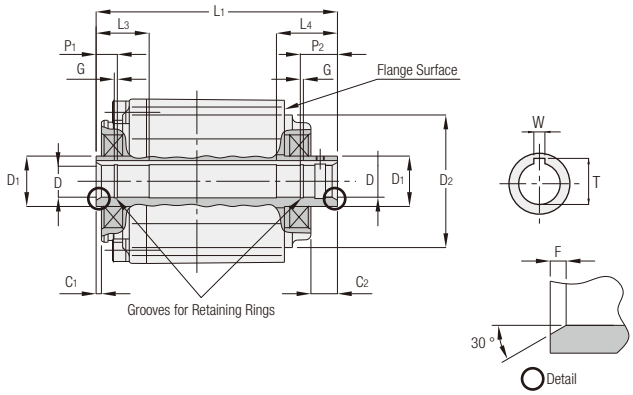

Dimension / Frame Size	Reduction Ratio	Power Class	D (H8)	D_1	D_2 (h7)	W	T	L_1	L_3	L_4	P_1	P_2	C_1	C_2	F	G
12	1/3 to 1/10	100 W, 200 W	Ø12	Ø19	Ø50	4	13.8	91	20	23	8	14	2	10	2	1.15
15	1/3 to 1/10	200 W, 400 W	Ø15	Ø24	Ø60	5	17.3	106	21	25	9	16	2	10	2	1.15
	1/10 to 1/30	100 W						102								
18	1/3 to 1/10	400 W, 750 W	Ø18	Ø29	Ø70	6	20.8	119	23	27	12	17	2	13	2	1.15
	1/10 to 1/60	100 W, 200 W						113								
22	1/3 to 1/5	1000 W	Ø22	Ø34	Ø90	6	24.8	138	25	33	14	20	2	13	2	1.15
	1/7.5 to 1/10	750 W														
	1/10 to 1/60	200 W, 400 W						126								
28	1/3 to 1/5	2000 W	Ø28	Ø44	Ø110	8	31.3	161	30	37	16	22	2	13	2	1.35
	1/7.5 to 1/10	1000 W														
	1/10 to 1/60	400 W, 750 W						137.5								
	1/15 to 1/30	0.75 kW *														
32	1/3 to 1/5	3000 W	Ø32	Ø49	Ø120	10	35.3	161	35	43	18	27	2	13	2	1.35
	1/7.5 to 1/10	2000 W														
	1/10 to 1/30	1000 W						154								
	1/40 to 1/60	750 W														
		0.75 kW *														

Note 1: The values marked with * are the values of a battery powered gearmotor.
Note 2: The key groove dimensions and tolerances for output shafts comply with JIS B1301-1996 parallel keys (plain form).

■ AF3S Type

1 arc min and 3 arc min Specifications

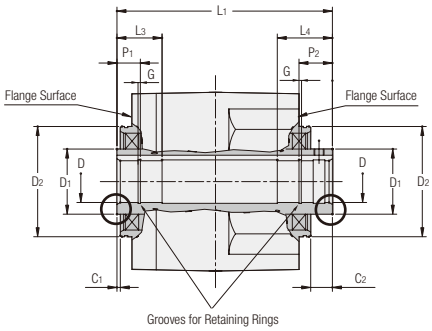

Low Backlash Specification

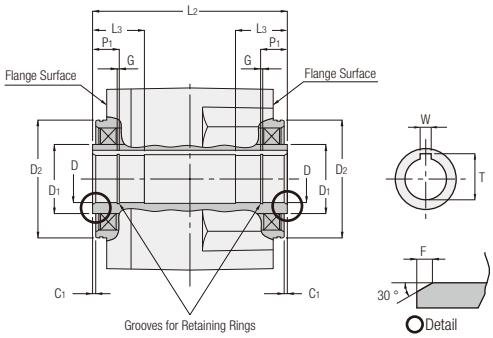

Frame Size	D (H8)	D_1	D_2 (h7)	W	T	L_1	L_2	L_3	L_4	P_1	P_2	C_1	C_2	F	G
20	Ø20	Ø29	Ø53	6	22.8	—	96	24	—	13	—	2	—	2	1.15
25	Ø25	Ø39	Ø66	8	28.3	129	118	27	33	14	20	2	13	2	1.35
30	Ø30	Ø44	Ø75	8	33.3	135	124	33	40	17	23	2	13	2	1.35
35	Ø35	Ø49	Ø85	10	38.3	153	142	38	47	20	26	2	13	2	1.75
45	Ø45	Ø64	Ø100	14	48.8	183	168	50	63	26	39	2	17	2	1.95

Note 1: Frame size 20 is available only for low backlash specifications.
Note 2: Frame size 15 is available only for 1 arc min and 3 arc min specifications. The shape of this frame size is different from shapes of the other frame sizes. Check it with the dimension diagram shown on page 856.
Note 3: The key groove dimensions and tolerances for output shafts comply with JIS B1301-1996 parallel keys (plain form).

Detailed Diagram of Tapped Holes for Face Mount Installation

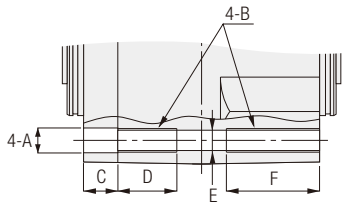

■ F3F/F3S Types

Frame Size	Power	Reduction Ratio	A	B	C	D	E	F
20 (18)	0.2 kW (Note 1)	1/5 to 1/30	Ø10.5	M10 × P1.5	12	25	Ø8.6	37
	0.1 kW	1/5 to 1/60	Ø10.5	M10 × P1.5	12	25	Ø8.6	37
25 (22)	0.4 kW (Note 1)	1/5 to 1/30	Ø10.5	M10 × P1.5	14.5	25	Ø8.6	39.5
	0.2 kW	1/5 to 1/60	Ø10.5	M10 × P1.5	14.5	25	Ø8.6	39.5
	0.1 kW	1/80 to 1/240	Ø10.5	M10 × P1.5	14.5	25	Ø8.6	39.5
30 (28)	0.75 kW (Note 1)	1/5 to 1/30	Ø10.5	M10 × P1.5	15.5	25	Ø8.6	40.5
	0.4 kW	1/5 to 1/60	Ø10.5	M10 × P1.5	15.5	25	Ø8.6	40.5
	0.2 kW	1/80 to 1/240	Ø12.5	M12 × P1.75	15.5	30	Ø10.6	45.5
35 (32)	1.5 kW (Note 1)	1/5 to 1/30	Ø12.5	M12 × P1.75	18	30	Ø10.6	48
	0.75 kW	1/5 to 1/60	Ø12.5	M12 × P1.75	18	30	Ø10.6	48
	0.4 kW	1/50 to 1/240	Ø16.5	M16 × P2	18	40	Ø14	58
45 (40)	2.2 kW	1/5 to 1/30	Ø16.5	M16 × P2	23	40	Ø14	63
	1.5 kW	1/5 to 1/60	Ø16.5	M16 × P2	23	40	Ø14	63
	0.75 kW	1/80 to 1/240	Ø20.5	M20 × P2.5	23	50	Ø17.5	73

Note 1: The powers are available only for induction gearmotors.
Note 2: The values in parenthesis in Frame Size are for the F3F (concentric right angle shaft).
Note 3: For the required engagement allowance for bolts, we recommend a value twice the nominal size of the screw (bolt diameter). (Example: For an M10 bolt, an engagement allowance of 20 mm or more is recommended.)

■ VF3F/VF3S Types

Frame Size	Power	Reduction Ratio	A	B	C	D	E	F
15 (18)	0.1 kW	1/10 to 1/160	Ø10.5	M10 × P1.5	13	25	Ø8.6	38
25 (22)	0.2 kW	1/10 to 1/60	Ø10.5	M10 × P1.5	14.5	25	Ø8.6	39.5
30 (28)	0.4 kW	1/10 to 1/60	Ø10.5	M10 × P1.5	15.5	25	Ø8.6	40.5
	0.2 kW	1/80 to 1/240	Ø12.5	M12 × P1.75	15.5	30	Ø10.6	45.5
35 (32)	0.4 kW	1/80 to 1/240	Ø16.5	M16 × P2	18	40	Ø14	58

Note 1: The values in parenthesis in Frame Size are for the VF3F (concentric right angle shaft).
Note 2: For the required engagement allowance for bolts, we recommend a value twice the nominal size of the screw (bolt diameter). (Example: For an M10 bolt, an engagement allowance of 20 mm or more is recommended.)

■ AF3F/AF3S Types

Frame Size	Power Class	Reduction Ratio	A	B	C	D	E	F
15 (18) (Note 1)	100 W	10 to 1/120	Ø10.5	M10 × P1.5	13	25	Ø8.6	38
20 (18) (Note 2)	100 W	1/5 to 1/60	Ø10.5	M10 × P1.5	12	25	Ø8.6	37
25 (22)	200 W	1/5 to 1/60	Ø10.5	M10 × P1.5	14.5	25	Ø8.6	39.5
	100 W	1/75 to 1/240	Ø10.5	M10 × P1.5	14.5	25	Ø8.6	39.5
30 (28)	400 W	1/5 to 1/60	Ø10.5	M10 × P1.5	15.5	25	Ø8.6	40.5
	200 W	1/75 to 1/240	Ø12.5	M12 × P1.75	15.5	30	Ø10.6	45.5
35 (32)	750 W	1/5 to 1/60	Ø12.5	M12 × P1.75	18	30	Ø10.6	48
	1000 W	1/5 to 1/60	Ø12.5	M12 × P1.75	18	30	Ø10.6	48
	400 W	1/75 to /240	Ø16.5	M16 × P2	18	40	Ø14	58
45 (40)	2000 W	1/5 to 1/60	Ø16.5	M16 × P2	23	40	Ø14	63
	750 W	1/75 to 1/240	Ø20.5	M20 × P2.5	23	50	Ø17.5	73

Note 1: The frame size is available only for backlash 1 arc min/3 arc min specifications
Note 2: The frame size is available only for low backlash specifications.
Note 3: The values in parenthesis in Frame Size are for the AF3F (concentric right angle shaft).
Note 4: For the required engagement allowance for bolts, we recommend a value twice the nominal size of the screw (bolt diameter). (Example: For an M10 bolt, an engagement allowance of 20 mm or more is recommended.)

Output Shaft Peripheral Dimensions

■ VGL (50 W, frame sizes 12 to 15) Type

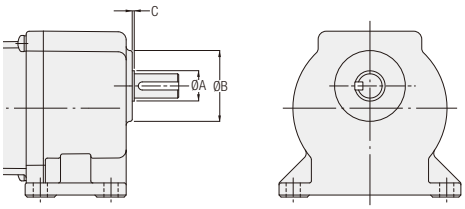

Dimension / Frame Size	A	B	C
12	15	35	1
15	17	40	1

■ VGL (0.1 kW, frame size 15) Type

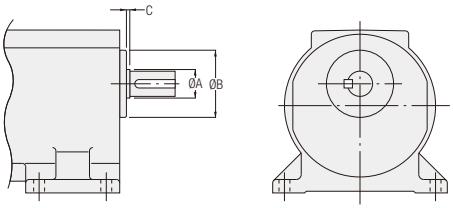

Dimension / Frame Size	A	B	C
15	17	40	2

■ G3L/AGL/VGL (frame sizes 18 to 32)/AG3L/AGAL Types

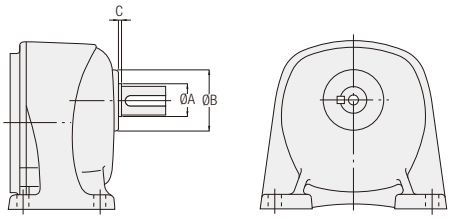

Dimension / Frame Size	A	B	C
18	20	43	2
22	24	50	2
28	30	60	2
32	34	68	3
40	42	90	3
50	53	105	3

■ G3F/AG3F Types

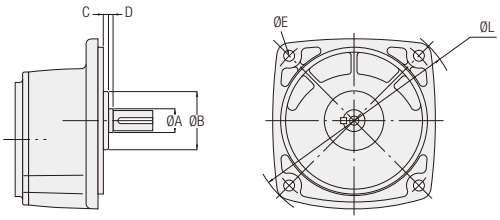

Dimension / Frame Size	A	B	C	D	E	L
18	20	50	0	2	R14	198
22	24	60	+1	2	R12.5	214
28	30	80	-1	2	R12.5	214
32	34	88	-2	3	R15	282
40	42	100	-2	3	R19	350
50	53	120	0	3	R20	412

■ G3K/VGK/AG3K Types

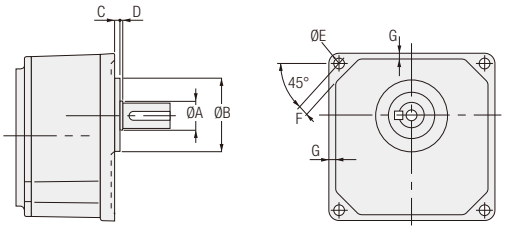

Dimension / Frame Size	A	B	C	D	E	F	G
18	20	50h7	4	2	R9	9	5
22	24	60h7	5	2	R9	9	5
28	30	80h7	5	2	R11	11	7
32	34	88h7	5	3	R13	13	8

■ VGK (50 W, frame sizes 12 to 15) Type

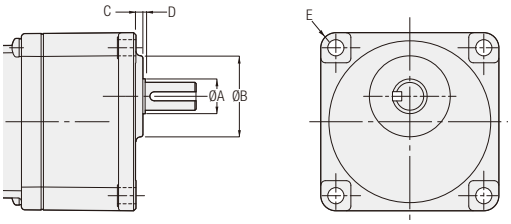

Dimension / Frame Size	A	B	C	D	E
12	15	35	3	1	R6.5
15	17	40	3	1	R7.5

Note 1: Dimension B indicates area with remaining casting surface, and so please add 0.5 mm or more to dimension B for the diameter of the mating hole.

■ VGK (0.1 kW, frame size 15) Type

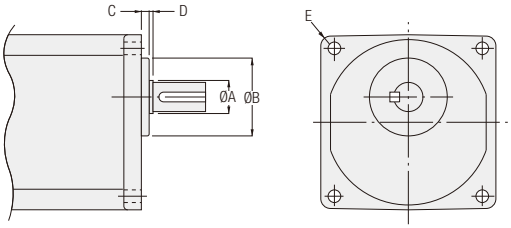

Dimension / Frame Size	A	B	C	D	E
15	17	40	4	2	R5

Note 1: Dimension B indicates area with remaining casting surface, and so please add 0.5 mm or more to dimension B for the diameter of the mating hole.

■ APG Type

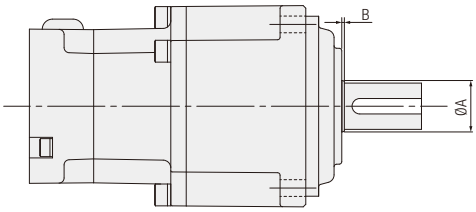

Dimension / Frame Size	A	tolerances	B
12	14	0 -0.027	1
18	20	0 -0.033	1
22	29	0 -0.033	1
28	34	0 -0.039	2.5

■ VHL (frame size 18) Type

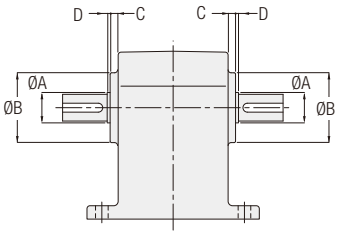

Dimension / Frame Size	A	B	C	D
18	20	47	5	2

■ H2L/VHL (frame sizes 22 to 32)/AH2L Types

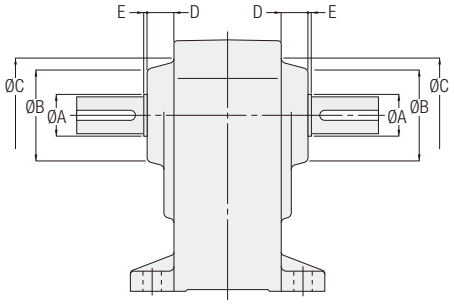

Dimension / Frame Size	A	B	C	D	E
22	25	55	63.5	16	2
28	30	67	76	16	2
32	35	78	88	17	3
40	45	92	104	21	2
50	55	110	122	22	3

■ H2F Type

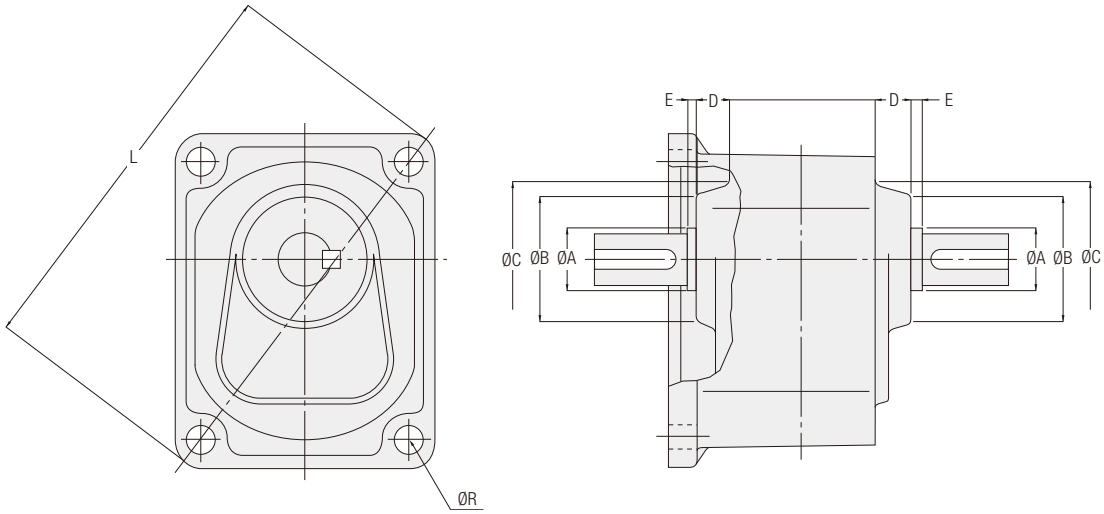

Dimension / Frame Size	A	B	C	D	E	R	L
22	25	55	63.5	16	2	11	174

■ FF Type

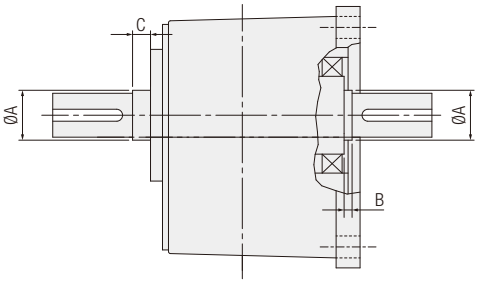

Dimension / Frame Size	ØA	B	C
22	25	3	9
28	30	3	13
32	35	3	18
40	45	3	22

■ F2F Type

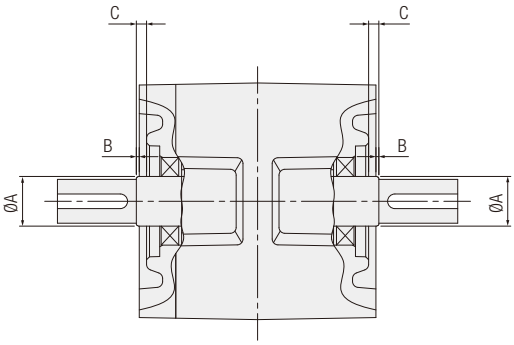

Dimension / Frame Size	A	tolerances	B	C
15	17	-0.022 -0.033	1	3.5
18	20	-0.024 -0.037	1	2

■ F3F Type

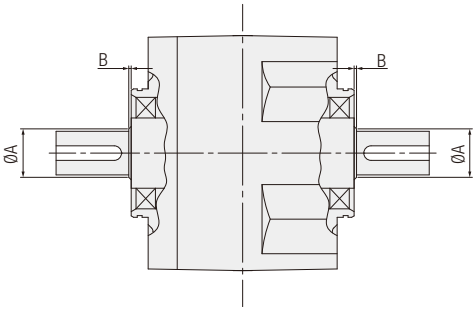

Dimension / Frame Size	A	B
18	20	1
22	24	1
28	30	1
32	35	1
40	42	1

■ VF3F (frame size 22/28/32) Type

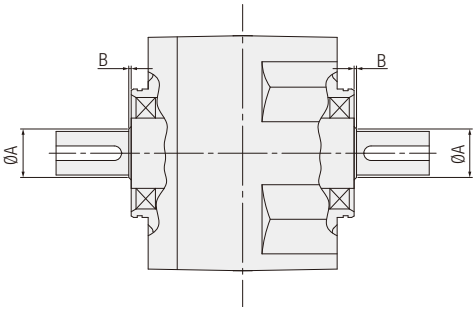

Dimension / Frame Size	A	B
22	24	1
28	30	1
32	35	1

■ VF3F (frame size 18) Type

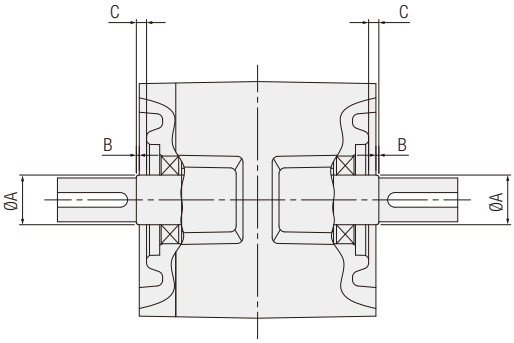

Dimension / Frame Size	A	tolerances	B	C
18	20	-0.024 -0.037	1	2

■ AF3F (frame size 22/28/32/40) Type

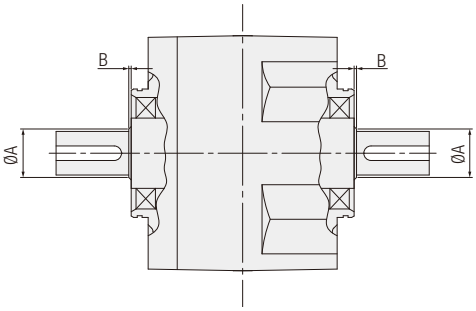

Dimension / Frame Size	A	B
22	24	1
28	30	1
32	35	1
40	42	1

■ AF3F (frame size 18) Type

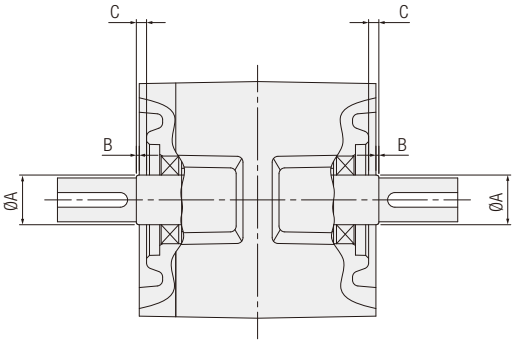

Dimension / Frame Size	A	tolerances	B	C
18	20	No	1	2

■ AFC Type

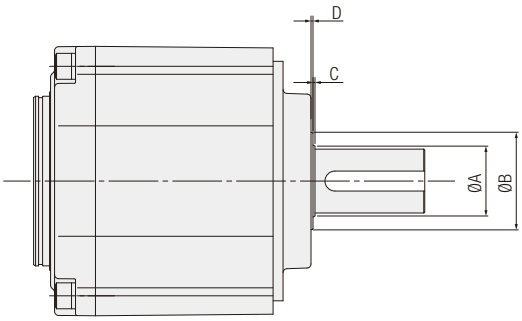

Dimension / Frame Size	ØA	ØB	tolerances	C	D
12	14	19	-0.02 -0.04	(1)	1
15	17	24	-0.02 -0.04	(1)	1
18	20	29	-0.02 -0.04	(1)	1
22	24	34	-0.02 -0.04	(1)	1
28	30	44	-0.02 -0.04	(1)	1
32	35	49	-0.02 -0.04	(1)	1

Right Angle Hollow Bore Safety Cover Detailed Dimensions

■ FS/FAS Type

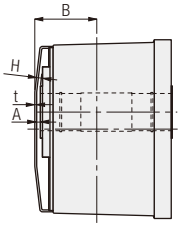

When attached to the R face

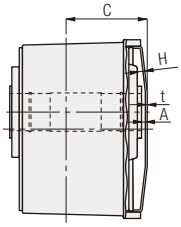

When attached to the L face

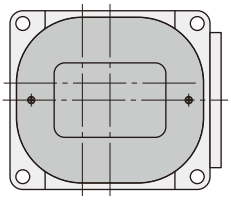

Frame Size	A Gap between shaft and cover	B When attached to the R face	C When attached to the L face	H	t
25	1.2	51	63	0.61	1.8
30	1.2	54	69	0.85	1.8
35	1.2	56	74	0.54	1.8
45	1.3	62.1	84.1	0.80	1.8
55	1.3	85.3	102.3	0.61	2.0

Concentric Right Angle Hollow Bore Safety Cap Detailed Dimensions

■ F2S Type

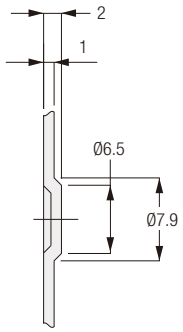

Ⓐ Detailed Diagram

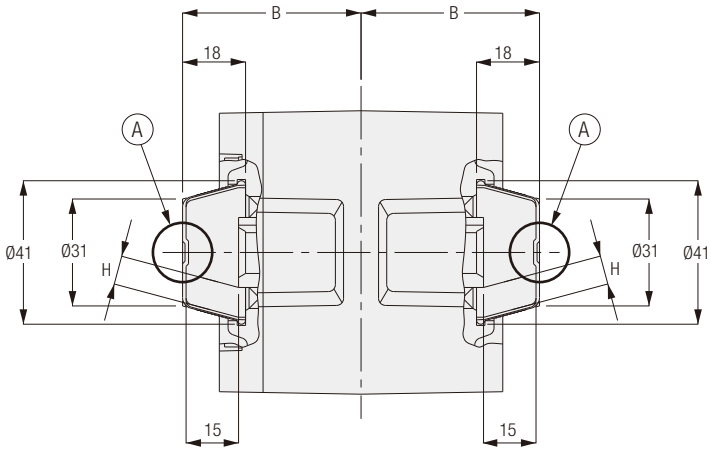

Frame Size	B	H
12	51	8.2
15	60	6.3

■ F3S Type/VF3S Type

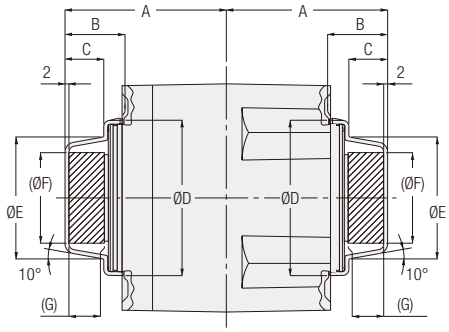

The areas in shading are empty spaces.

Frame Size	A	B	C	D	E	F	G
20	64	25.5	15.7	57	40	26	14
25	79	29.5	19.7	70	53	37.5	18
30	82	29.5	19.7	79	62	46.5	18
35	95	33.5	23.7	89	72	55	22
45	108	33.5	23.7	104	87	70	22

■ AFC Type

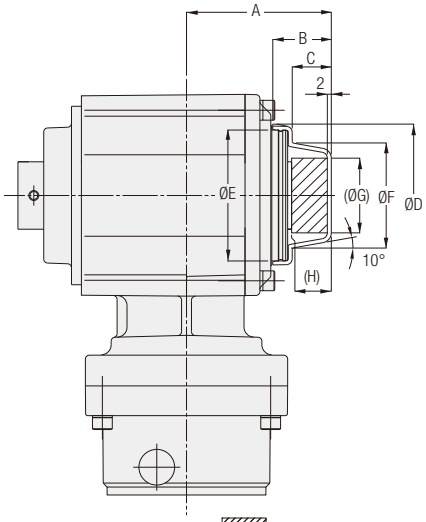

The areas in shading are empty spaces.

Dimension / Frame Size	Reduction Ratio	Power Class	A	B	C	D	E	F	G	H
12	1/3 to 1/10	100 W, 200 W	54	25.5	15.7	52	50	37	23	14
15	1/3 to 1/10	200 W, 400 W	56	25.5	15.7	52	50	37	23	14
	1/10 to 1/30	100 W	60							
18	1/3 to 1/10	400 W, 750 W	61	25.5	15.7	59	57	40	26	14
	1/10 to 1/60	100 W, 200 W	65							
22	1/3 to 1/5	1000 W	73	29.5	19.7	72	70	53	37.5	18
	1/7.5 to 1/10	750 W								
	1/10 to 1/60	200 W, 400 W	76							
28	1/3 to 1/5	2000 W	82	29.5	19.7	81	79	62	46.5	18
	1/7.5 to 1/10	1000 W								
	1/10 to 1/60	400 W, 750 W	80.5							
	1/15 to 1/30	0.75 kW *								
32	1/3 to 1/5	3000 W	86	33.5	23.7	91	89	72	55	22
	1/7.5 to 1/10	2000 W								
	1/10 to 1/30	1000 W	93							
	1/40 to 1/60	750 W								
		0.75 kW *								

Note: The values marked with * are the values of a battery powered gearmotor.

■ AF3S Type

● 1 arc min and 3 arc min Specifications

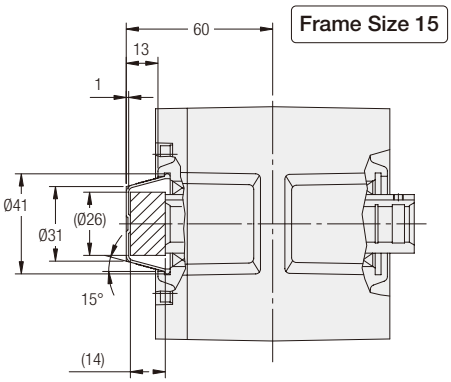

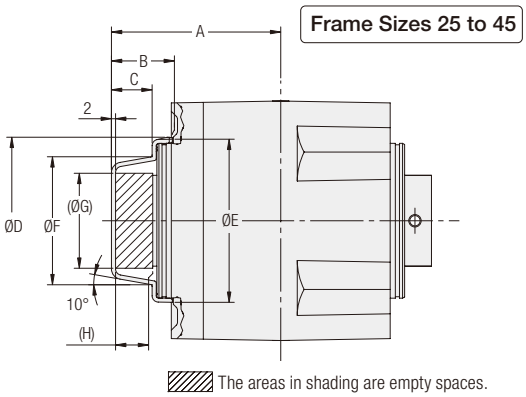

Frame Size	A	B	C	D	E	F	G	H
25	79	29.5	19.7	72	70	53	37.5	18
30	82	19.5	19.7	81	79	62	46.5	18
35	95	33.5	23.7	91	89	72	55	22
45	108	33.5	23.7	106	104	87	70	22

● Low Backlash Specification

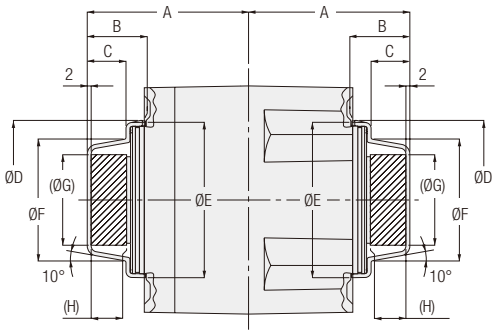

The areas in shading are empty spaces.

Frame Size	A	B	C	D	E	F	G	H
20	64	25.5	15.7	59	57	40	26	14
25	79	29.5	19.7	72	70	53	37.5	18
30	82	19.5	19.7	81	79	62	46.5	18
35	95	33.5	23.7	91	89	72	55	22
45	108	33.5	23.7	106	104	87	70	22

Frame Sizes for Concentric Right Angle Hollow Bore/Concentric Right Angle Shaft

Concentric right angle hollow bore types and concentric right angle shaft types are available in two shapes with the same frame size. Please note that the shape differs depending on the reduction ratio even if the frame size is the same. In addition, concentric right angle hollow bore types and concentric right angle shaft types are provided with tapped mounting holes (standard specification) for flange mount on both sides and face mount.

■ Shape

<Figure 1>

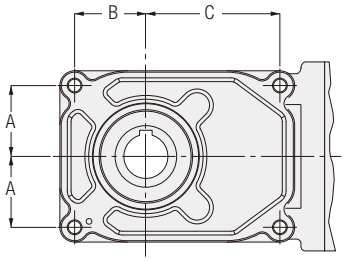

<Figure 2>

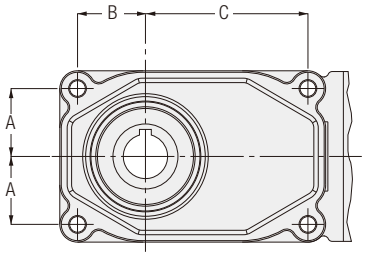

Frame Size	Reduction Ratio	Power	Shape	A	B	C
20(18)	1/5 to 1/60	0.1 kW	1	38.5	38.5	68.5
25(22)	1/5 to 1/60	0.2 kW	1	43.5	43.5	76.5
	1/80 to 1/240	0.1 kW	2	43.5	43.5	95.5
30(28)	1/5 to 1/60	0.4 kW	1	48	48	91
	1/80 to 1/240	0.2 kW	2	46	46	110
35(32)	1/5 to 1/60	0.75 kW	1	56	56	105
	1/80 to 1/240	0.4 kW	2	54	54	140
45(40)	1/5 to 1/60	1.5 kW	1	73	73	134
	1/5 to 1/30	2.2 kW				
	1/80 to 1/240	0.75 kW	2	69	69	167

Note 1: The values in parenthesis in Frame Size are for concentric right angle shaft types.

Installation and Removal for Right Angle Hollow Bore

FS/FAS/F2S/F3S Types/AF3S Type/VF3S Type/AFC Type

Installing the Right Angle Hollow Bore of the Gearbox to the Driven Shaft

- Apply an anti-seize agent (molybdenum disulfide etc.) suitable for the environment of use to the surface of the driven shaft and the internal diameter of the right angle hollow bore, and insert the gearbox into the driven shaft
- The internal diameter of the right angle hollow bore is designed to have a tolerance of H8.When no shock is imposed under a uniform load, the recommended tolerance for the driven shaft is h7.If a shock load is imposed or a radial load is high, tighten the fit.
- If the fit is tight, insert the right angle hollow bore output shaft by tapping its end face with a plastic hammer.In this case, be sure not to hit the casing.If you make a jig as shown in the diagram below, you can insert the shaft more smoothly.

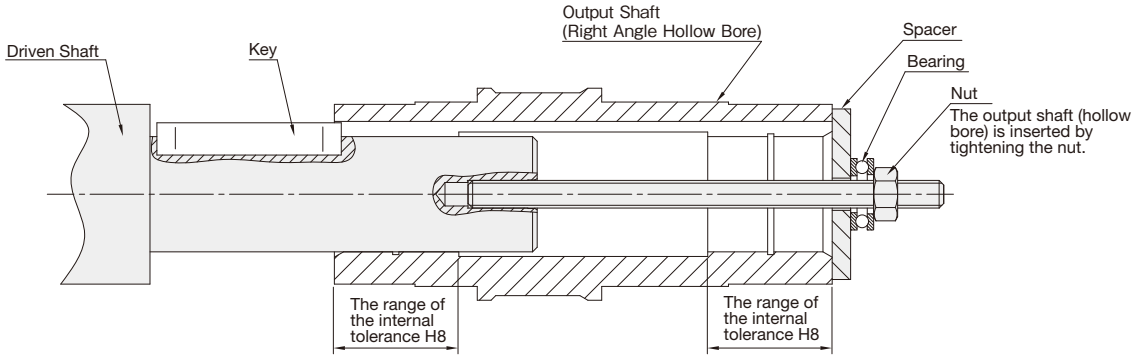

(Please prepare spacers, nuts, bolts, key material, and bearings by yourself)

- It is recommended to arrange the length of the driven shaft and the detent key to reach the range of the internal diameter tolerance H8 on the fixing side.
  (The dimension of the range of the internal tolerance H8 corresponds to L_1 in “Output Shaft Detailed Dimensions” on pages 982 to 985.)
- It is recommended to adjust the axial runout of the driven shaft to 0.05 mm or less at the end of the shaft. If the axial runout increases during operation, it may adversely affect the product.

Connecting to the Driven Shaft

● When the driven shaft is provided with a step

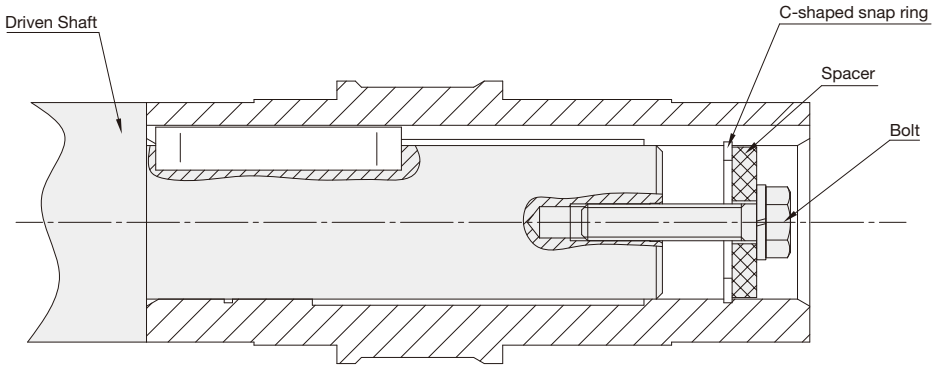

Fixing using a spacer and a C-shaped snap ring
(Please prepare spacers, bolts, and C-shaped snap ring by yourself)

Note 1: Please note that the C-shaped snap ring may deform if the bolt is tightened excessively.

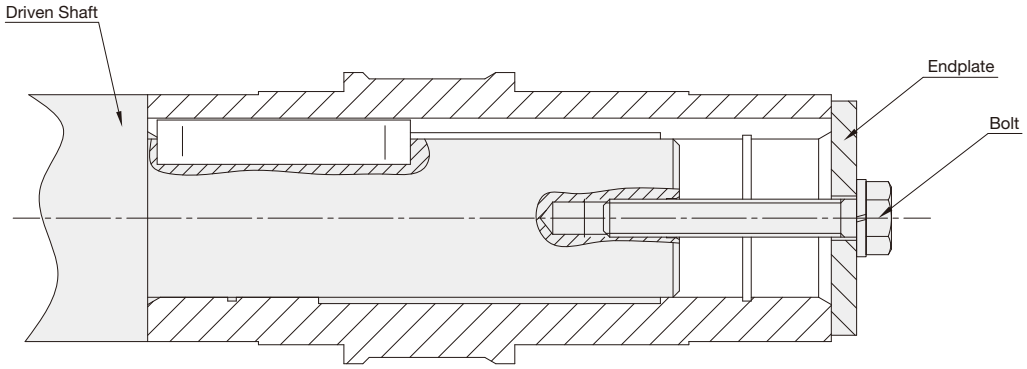

Fixation Using an Endplate
(Please prepare endplates and bolts by yourself)

Note 1: The safety cover supplied with the FS and FAS types cannot be mounted due to interference with the endplates and bolts.Take safety measures such as mounting a protective cover to prevent entanglement with the rotating shaft.

● When the driven shaft is not provided with a step

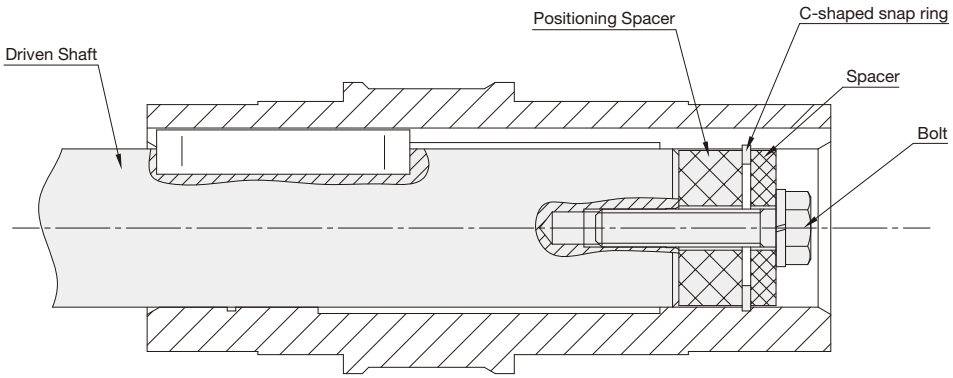

Fixing using a spacer and a C-shaped snap ring
(Please prepare a spacer, a positioning spacer, a bolt, and a C-shaped snap ring yourself.)

Note 1: Be sure to allow a gap between the outer diameter of the spacer and the internal diameter of the right angle hollow bore.If the fit is tight or the outer diameter of the spacer is inaccurate, the axial runout of the driven shaft and right angle hollow bore may increase.
Use a positioning spacer to position the gearbox.It is not required if the length of the driven shaft is secured in advance.In addition, attaching a positioning spacer enables you to smoothly remove the shaft from the right angle hollow bore. (Refer to page 1000 [Reference examples 1 to 4] for removal from the hollow bore.

Recommended Sizes for the Fixing Elements of the Driven Shaft

Design the tightening of right angle hollow bore types for general purposes by referring to the dimensions shown in the right table to ensure strength.

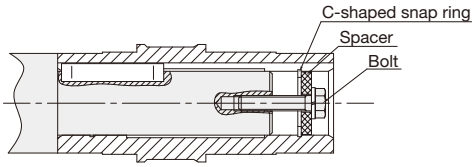

● Recommended Sizes for the Fixing Elements of the Driven Shaft

Category / Frame Size	Bolt Size	Spacer Dimensions			C-shaped Retaining Ring for Hole
		Outer Diameter	Internal Diameter	Width	
F2S-12 AFCZ12S	M5	Ø11.5	Ø6	3	12
F2S-15 AFCZ15S	M6	Ø14.5	Ø7	3	15
AFCZ18S	M6	Ø17.5	Ø7	3	18
F3S-20 AF3S20	M6	Ø19.5	Ø7	3	20
AFCZ22S	M6	Ø21.5	Ø7	4	22
FS-25 F3S-25 AF3S25	M6	Ø24.5	Ø7	4	25
AFCZ28S	M8	Ø27.5	Ø9	5	28
FS-30 F3S-30 AF3S30	M8	Ø29.5	Ø9	5	30
AFCZ32S	M10	Ø31.5	Ø11	5	32
FS-35 F3S-35 AF3S35	M10	Ø34.5	Ø11	5	35
FS-45 F3S-45 AF3S45	M10	Ø44.5	Ø11	5	45
FS-55 FAS-55	M12	Ø54.5	Ø13	6	55

Driven Shaft Length

Arrange the driven shaft to reach both ends of the L_1 area. (Refer to the figure on the right)
However, allow for some margin for the spacer dimensions required for the following (removal from the right angle hollow bore)

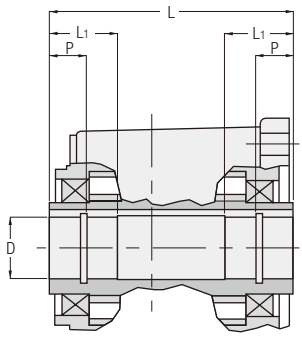

Driven Shaft Key Length

The key length for the AFC type must be at least 1.8 times the hollow bore diameter D. For types other than the AFC type, the key length must be at least 1.5 times the hollow bore diameter D.
In addition, adjust the key insertion position so that at least 1/2 of the overall length of the key is engaged with L_1. It is not necessary to apply on both sides of the two L_1 places. (Refer to the figure on the right)

Shaft Removal from the Right Angle Hollow Bore

Take care not to impose unnecessary force between the casing and the right angle hollow bore when remove the driven shaft.you make and use a jig as shown in the figure below, the shaft can be removed more smoothly.

●Reference example1

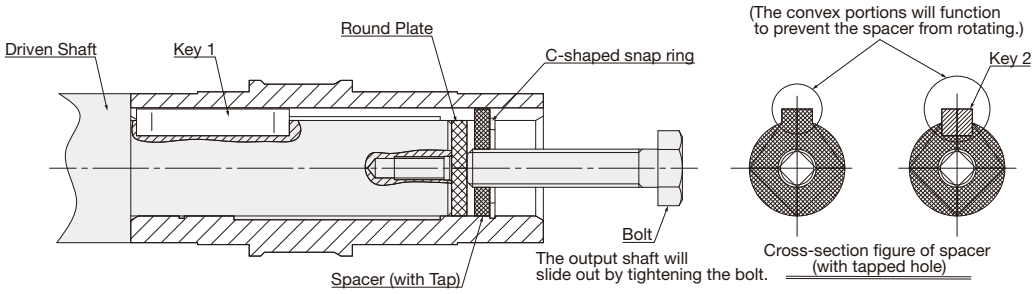

Please prepare a spacer, a round plate, a bolt, a retaining ring, and a key yourself.

●Reference example2

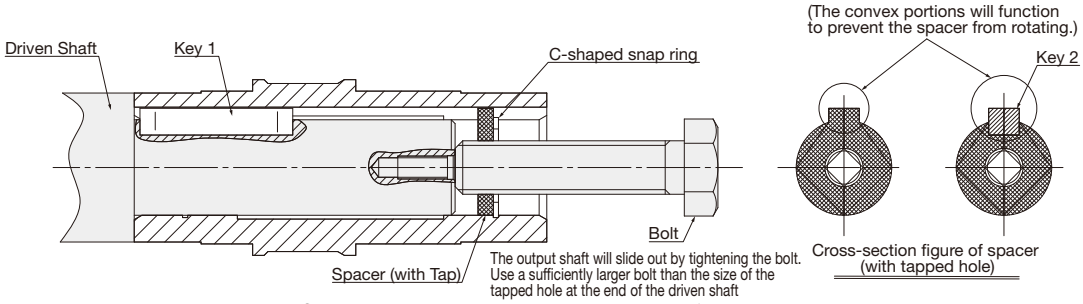

Please prepare a spacer, a bolt, a C-shaped Retaining Ring, and a key material yourself.

●Reference example3

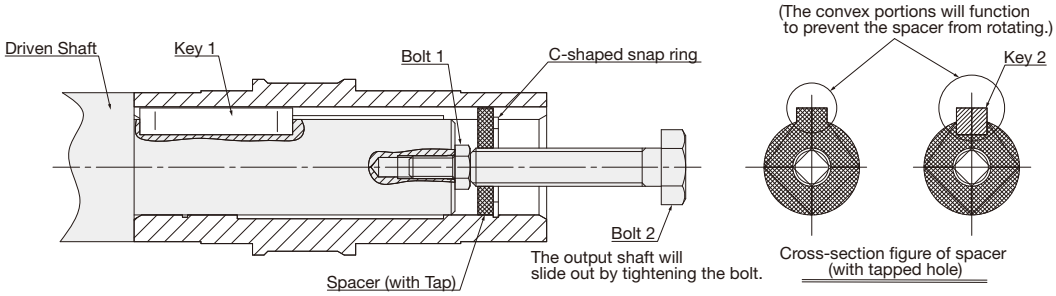

Please prepare a spacer, a bolt, a C-shaped Retaining Ring, and a key material yourself.

●Reference example4

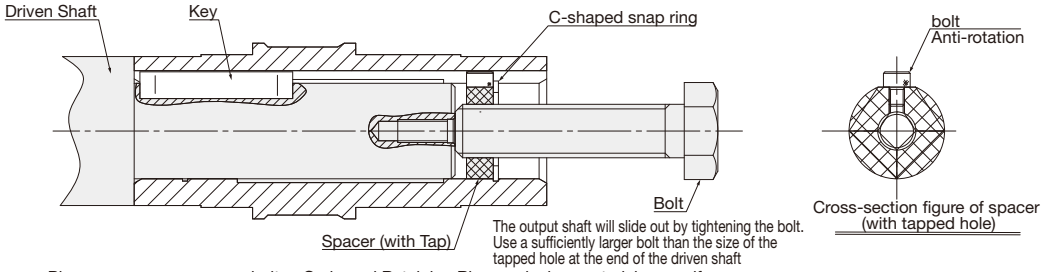

Please prepare a spacer, a bolt, a C-shaped Retaining Ring, and a key material yourself.

How to mount a gearbox

Advantages and disadvantages of flange mount and torque arm mount

	Advantage	Disadvantage
Flange Mount	- The gearbox can be installed directly on the machine. - The gearbox requires less space.	- Centering with the application is required. - Four tapped holes for mounting are required for the application (F Type).
Torque Arm Mount	- Centering with the application is easy. - Only one detent is required for fixation with the application.	- A torque arm is required. - Space for mounting a torque arm is required.

Flange Mount

- When mounting directly on the application installation flange surface, always perform centering.Misalignment at the center may cause motor seizing or bearing damage.
- If the product has an installation guide, use four mounting bolts and perform mounting as shown in the figure at right.The dimensional tolerance for ØA for the installation guide is h7.

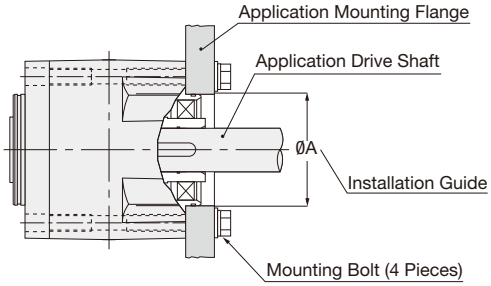

Fixing the Gearbox and the Torque Arm

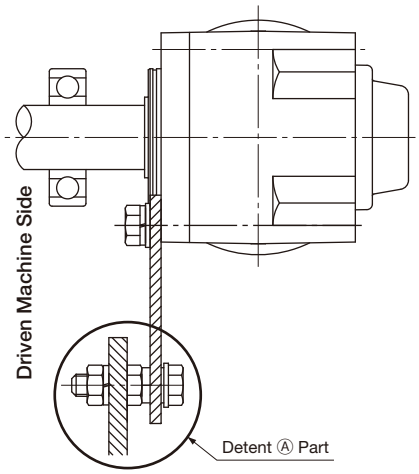

- Install the torque arm detent on the driven machine side.
- Since the torque arm sustains reactive force from rotation, use a thick plate or bolt having sufficient strength with particular consideration given to shock loads during startup and braking.
  You can also order an optional torque arms from us.
  Refer to page 1006.
- To install the torque arm and the gearbox, fix them using mounting bolts with a spring washer and a flat washer.
  For tightening torques, refer to the table shown below.

● Bolt sizes and tightening torques

(reference values)

Bolt Size	Tightening Torque N·m
M5	2.9
M6	4.9
M8	13
M10	25
M12	44
M14	69
M16	108
M20	294

■ Installation Example of Detent Ⓐ

● For CW/CCW rotation operation and unidirectional operation (intermittent)

Securely fix the torque arm so that it does not become loose. In this step, confirm that no radial load (suspension load) is imposed on the driven shaft and the entire right angle hollow bore of the gearbox due to misalignment between the hole of the detent and the driven machine. [Figure-1]

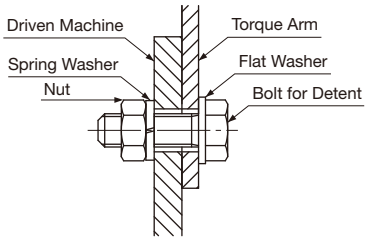

[Figure-1]

Note 1: If the detent is loose, a shock may be applied to the torque arm upon each startup and cause a failure such as bolt looseness.
If it is impossible to install the detent without looseness for some unavoidable reason, use a rubber bushing or another cushion material between the torque arm and the detent bolt to protect the bolt.
In addition, use a bolt that has sufficient strength. [Figure-2]

<Bad Example>

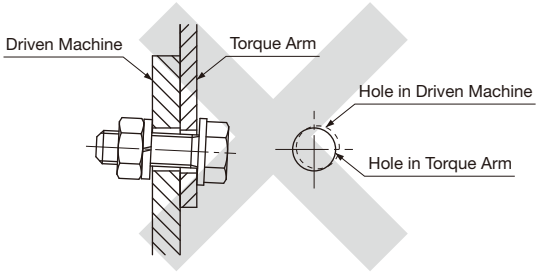

Excessive force will be applied to the driven shaft and the right angle hollow bore and result in defects.

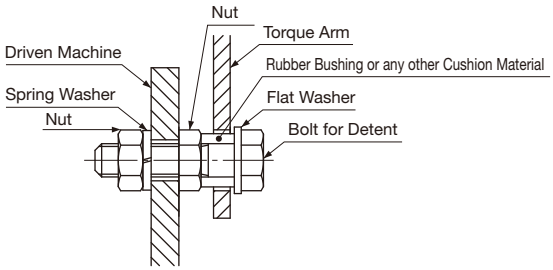

[Figure-2]

● **Unidirectional Operation (Continuous)**

In unidirectional operation (continuous) that does not frequently impose startup torque, the torque arm can be used with the detent in a free state.

However, the driven shaft and the right angle hollow bore need to be fixed. Refer to pages 997 and 998.

In this case, it is necessary to secure sufficient clearance for looseness in both radial and thrust directions for alignment between the driven machine and the torque arm detent. [Figure-1]

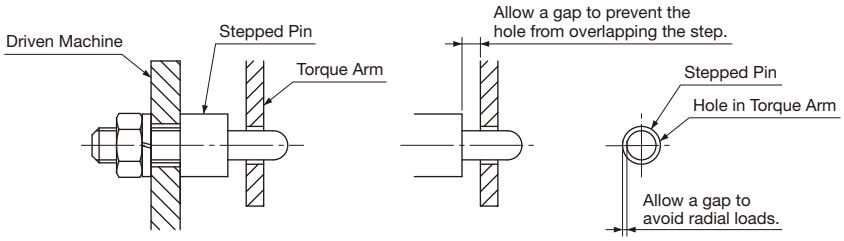

[Figure-1]
Installation Example Using a Stepped Pin

Torque Arm Design

You can order optional torque arms from us, but if you manufacture a torque arm yourself, keep in mind the points described below. For optional torque arms, refer to page 1006.

● **When using a torque arm as shown in [Figure-2]**

Set the distance r from the center of the output shaft to the detent to

SI Units

$$r\ (\text{mm}) \geq \frac{\text{Actual load torque (N·m)} \times 1000}{\text{Allowable O.H.L. (N)} - 9.8 \times \text{Gearmotors (kg)}}$$

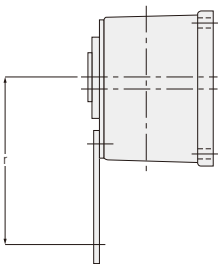

[Figure-2]

Note 2: For the plate thickness of the torque arm, refer to page 1006.

● **When using a torque arm as shown in [Figure-3]**

Set the distance r from the center of the output shaft to the detent to

SI Units

$$r\ (\text{mm}) \geq \frac{\text{Actual load torque (N·m)} \times (A + M) \times 1000}{\{\text{Allowable O.H.L. (N)} - 9.8 \times \text{Gearmotors (kg)}\} \times (A + 20)}$$

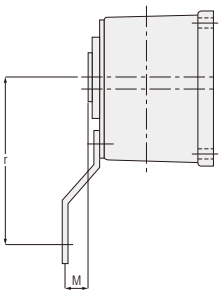

[Figure-3]

■ Constant A

Frame Size	A (mm)
20	68.5
25	84.5
30	91
35	98
45	113
55	150

● **In case of using the torque arm as shown in [Figure-4]**

the distance r from the center of the output shaft to the detent can be calculated with the following formulas:

SI Units

$$r\ (\text{mm}) \geq \frac{\text{Actual load torque (N·m)} \times (A + M) \times 1000}{\{\text{Allowable O.H.L. (N)} - 9.8 \times \text{Gearmotors Weight (kg)}\} \times (A + 10)}$$

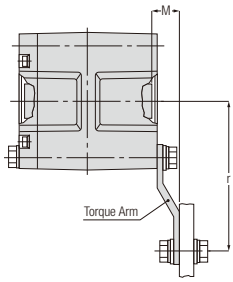

[Figure-4]

■ Constant A

Frame Size	A (mm)
12	43
15	55

MEMO

Option

P.1006 Torque Arm
P.1009 R Flange
P.1010 Compact Flange
P.1011 Surge Suppressors for Brake Wiring
P.1012 Option Codes
P.1013 Motor Shaft Extension
P.1014 Encoders
P.1016 Forced Fan
P.1017 Cable Glands
P.1017 Output Shaft Tapping (Threading)
P.1018 Output Shaft Hole Diameter Custom Specifications

Torque Arm

MINI Series

■ F2S Type

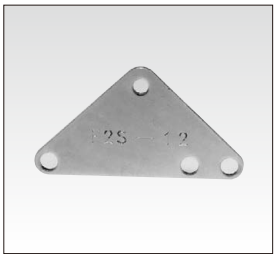

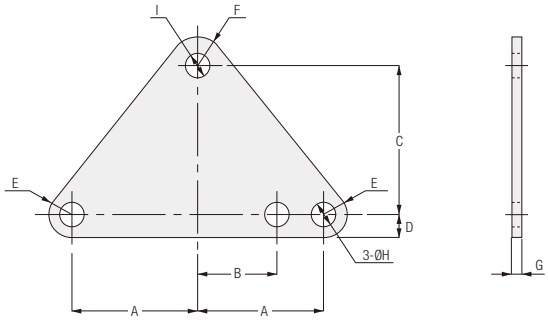

Part No.	Applicable Frame Size	A	B	C	D	E	F	G	H	I	Weight (g)
TAF2S-12	12	43	24	37.5	7	R7	R9	3.2	8.4	Ø7	75
TAF2S-15	15	48	30	56.5	9	R9	R11	3.2	10.5	Ø9	125

● Torque Arm Specifications

Material	Surface Treatment	Color
SS400	Trivalent Chromate	White

MID Series

■ FS/FAS Type

<Figure-1>

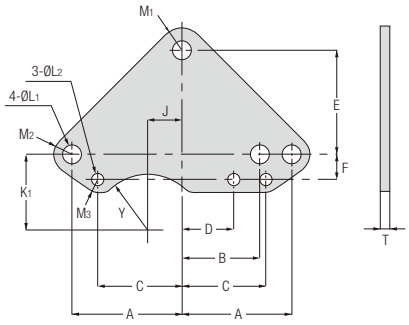

<Figure-2>

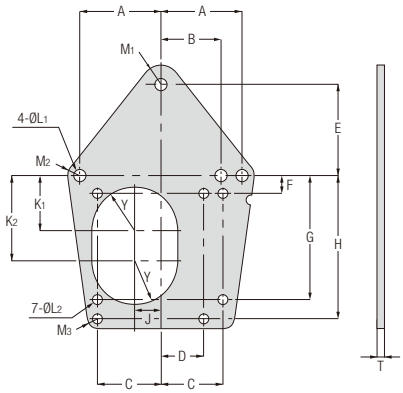

Part No.	Applicable Frame Size	Figure	A	B	C	D	E	F	G	H	J	K_1	K_2	L_1	L_2	M_1	M_2	M_3	Y	T	Weight (kg)
TA-25	25	1	63	47	47	31	61	16	—	—	19	44	—	11	6.5	R15	R10.5	R7	R34	4.5	0.3
TA-30	30	1	70	52	53	35	70	17	—	—	20	50	—	11	9	R15	R12	R9	R39	6	0.5
TA-35	35	2	82	62	64	44	94	18	126	146	26	56	88	13	9	R18	R12	R10	R43.5	6	1.2
TA-45	45	2	102	72	80	50	110	22	152	182	32	70	104	15	11	R20	R15	R11	R51	9	3.0
TA-55	55	2	129	93	97	61	160	32	190	226	39	90	132	18	13	R25	R20	R13	R70	9	4.8

● Torque Arm Specifications

Material	Surface Treatment	Color
SS400	Trivalent Chromate	White

■ F3S Type

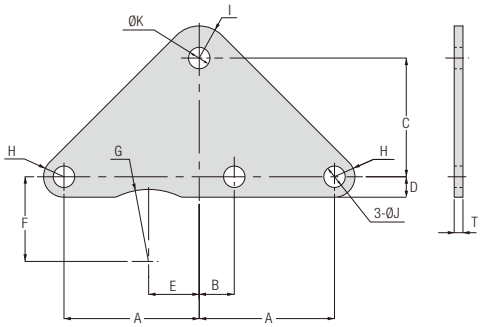

Part No.	Applicable Frame Size	Power	Applicable Reduction Ratio	A	B	C	D	E	F	G	H	I	J	K	T	Weight (kg)
TAF3S-20-2	20	0.2 kW	1/5 to 1/30	53.5	23.5	52	10.5	—	—	—	R10.5	R11	11	9	3.2	0.1
		0.1 kW	1/5 to 1/60													
TAF3S-25-2	25	0.4 kW	1/5 to 1/30	60	27	61	10.5	16.5	43.5	R37	R10.5	R15	11	9	3.2	0.2
		0.2 kW	1/5 to 1/60													
TAF3S-25-3		0.1 kW	1/80 to 1/240	69.5	17.5	61	10.5	26	43.5	R37	R10.5	R16.5	11	11	4.5	0.2
TAF3S-30-2	30	0.75 kW	1/5 to 1/30	69.5	26.5	70	10.5	21.5	48	R41.5	R10.5	R15	11	11	4.5	0.3
		0.4 kW	1/5 to 1/60													
TAF3S-30-3		0.2 kW	1/80 to 1/240	78	14	70	12	32	46	R41.5	R12	R16.5	13.5	13.5	6	0.4
TAF3S-35-2	35	1.5 kW	1/5 to 1/30	80.5	31.5	94	12	24.5	56	R46.5	R12	R18	13.5	13.5	6	0.6
		0.75 kW	1/5 to 1/60													
TAF3S-35-3		0.4 kW	1/80 to 1/240	97	11	94	15	43	54	R46.5	R15	R22.5	17.5	17.5	9	1.2
TAF3S-45-2	45	1.5 kW	1/5 to 1/60	103.5	42.5	110	15	—	—	—	R15	R20	17.5	17.5	9	1.4
		2.2 kW	1/5 to 1/30													
TAF3S-45-3		0.75 kW	1/80 to 1/240	118	20	110	18.5	49	69	R54	R18.5	R28.5	22	22	9	1.7

● Torque Arm Specifications

Material	Surface Treatment	Color
SS400	Trivalent Chromate	White

Battery powered Gearmotor V Series

■ F3S Type/VF3S Type

● Frame Size 15

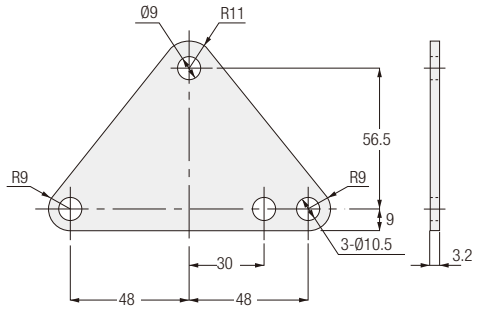

TAF2S-15

● Frame Sizes 25 to 35

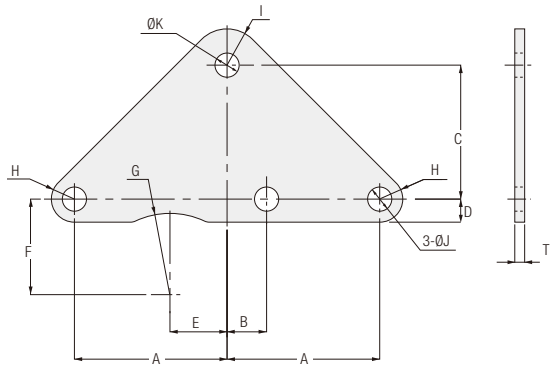

Part No.	Applicable Frame Size	Power	Applicable Reduction Ratio	A	B	C	D	E	F	G	H	I	J	K	T	Weight (kg)
TAF2S-15	15	0.1 kW	1/10 to 1/160	—	—	—	—	—	—	—	—	—	—	—	—	0.1
TAF3S-25-2	25	0.2 kW	1/10 to 1/60	60	27	61	10.5	16.5	43.5	R37	R10.5	R15	11	9	3.2	0.2
TAF3S-30-2	30	0.4 kW	1/10 to 1/60	69.5	26.5	70	10.5	21.5	48	R41.5	R10.5	R15	11	11	4.5	0.3
TAF3S-30-3		0.2 kW	1/80 to 1/240	78	14	70	12	32	46	R41.5	R12	R16.5	13.5	13.5	6	0.4
TAF3S-35-3	35	0.4 kW	1/80 to 1/240	97	11	94	15	43	54	R46.5	R15	R22.5	17.5	17.5	9	1.2

● Torque Arm Specifications

Part No.	Applicable Frame Size	Power	Applicable Reduction Ratio	Material	Surface Treatment	Color
TAF2S-15	15	0.1 kW	1/10 to 1/160	SS400	Trivalent Chromate	Surface Treatment Color (White-based Color)
TAF3S-25-2	25	0.2 kW	1/10 to 1/60			
TAF3S-30-2	30	0.4 kW	1/10 to 1/60			
TAF3S-30-3		0.2 kW	1/80 to 1/240			
TAF3S-35-3	35	0.4 kW	1/80 to 1/240			

R Flange

Induction Gearmotors

■ FS/FAS Type (Right Angle Hollow Bore)

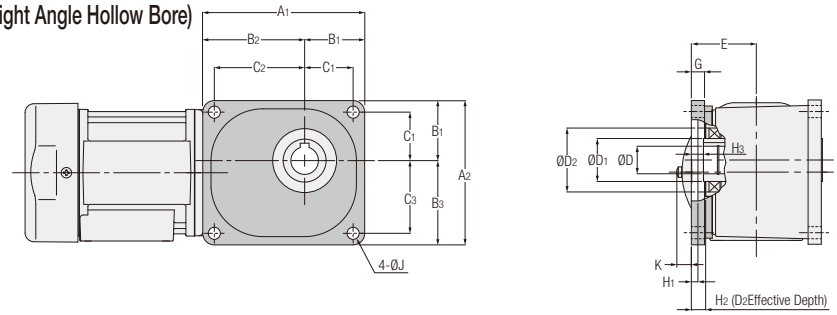

Part No.	Applicable Frame Size	A_1	A_2	B_1	B_2	B_3	C_1	C_2	C_3	E	G	H_1	H_2	H_3	D_2 (H8)	Output Shaft		J	K Note 1, Note 2
																D_1	D (H8)		
RF-25	25	147	131	54.5	92.5	76.5	44	82	66	59	12	6	12	11	58	39	25	11	13.5 (—)
RF-30	30	164	146	62	102	84	50	90	72	65	14	5	15	14	65	44	30	11	7.5 (7.5)
RF-35	35	188	168	68	120	100	56	108	88	70	16	3	18	17	72	49	35	13	2.5 (2.5)
RF-45	45	234	204	85	149	119	70	134	104	80	18	3	22	21	85	64	45	15	— (—)
RF-55	55	298	262	110	188	152	90	168	132	98	22	6	17	16	100	79	55	18	— (—)

Note1: The K dimension is the value for gearmotor with brake.
Note2: The value in brackets is the IP65 gearmotor value.
Note3: For 1-Phase cases, please contact your nearest Sales Office or the CS Center.

■ FF Type (Right Angle Shaft)

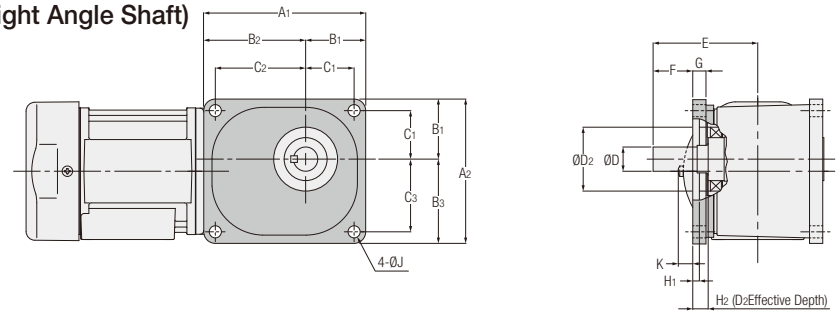

Part No.	Applicable Frame Size	A_1	A_2	B_1	B_2	B_3	C_1	C_2	C_3	E	G	H_1	H_2	D_2 (H8)	Output Shaft		J	K Note 1, Note 2
															F	D (h6)		
RF-25	22	147	131	54.5	92.5	76.5	44	82	66	95	12	6	12	58	36	22	11	13.5 (—)
RF-30	28	164	146	62	102	84	50	90	72	107	14	5	15	65	42	28	11	7.5 (7.5)
RF-35	32	188	168	68	120	100	56	108	88	124	16	3	18	72	54	32	13	— (—)
RF-45	40	234	204	85	149	119	70	134	104	144	18	3	22	85	64	40	15	— (—)

Note1: The K dimension is the value for gearmotor with brake.
Note2: The value in brackets is the IP65 gearmotor value.

● R Flange Specifications

Part No.	Applicable Frame Size	Weight (kg)	Material	Color
RF-25	25·22	0.5	Aluminum Casting	Gray
RF-30	30·28	0.5	Aluminum	
RF-35	35·32	1.0	Aluminum Casting	
RF-45	45·40	2.0		
RF-55	55	7.0	Cast Iron	

Compact Flange

A compact flange is a flange mount fixture exclusively for right angle hollow bore (AFC). A compact flange is supplied with bolts for mounting it.

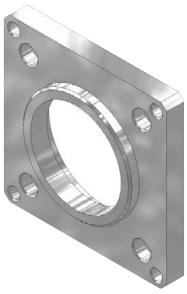

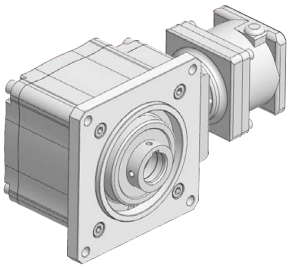

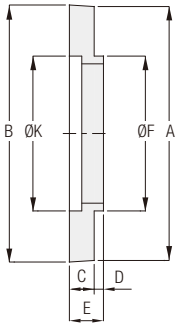

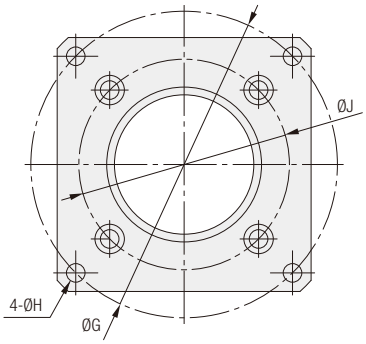

Part No.	Applicable Frame Size	A	B	C	D	E	F	G	H	J	K	Mounting Bolt (4 Pieces, Accessory)	Approx. Weight (g)	Material	Surface Treatment
CF-10	10	□76	(□77)	8	3	11	50h7	91	6	68	50H7	Hex Head Cap Screw M5 × 12	85	Aluminum Casting	No
CF-12	12	□82	(□83)	8	3	11	50h7	99	6	76	50H7	Hex Head Cap Screw M5 × 12	105		
CF-15	15	□90	(□91)	10	5	15	60h7	111	6	88	60H7	Hex Head Cap Screw M5 × 12	155		
CF-18	18	□108	(□109)	10.5	5	15.5	70h7	130	7	98	70H7	Hex Head Cap Screw M6 × 15	235		
CF-22	22	□134	(□135)	12.5	5	17.5	90h7	161	9	120	90H7	Hex Head Cap Screw M8 × 20	415		
CF-28	28	□152	(□153)	12.5	5	17.5	110h7	185	9	140	110H7	Hex Head Cap Screw M8 × 20	495		
CF-32	32	□172	(□173)	15	5	20	120h7	209	11	160	120H7	Hex Head Cap Screw M10 × 25	780		

Note 1: The mounting bolts are not provided with a spring washer, and if they become loose, use a screw locking adhesive etc. to keep them securely tightened.

Surge Suppressors for Brake Wiring

■ For 200 V Class Motors with a Brake (OP-ERZV10D471)

● Use a surge suppressor for the contact of a brake DC switching connection to extinguish sparks.

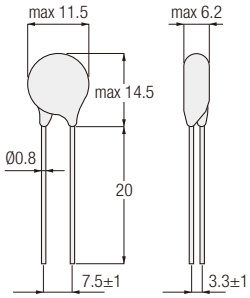

■ For 400 V Class Motors with a Brake (OP-ERZV10D911)

● Use a surge suppressor for the contact of a brake DC switching connection to extinguish sparks.

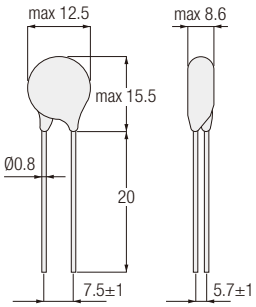

Option Codes

We can deal with orders for specification changes and additional work as described below as options. Use options according to the usage of the product.
You can also select combinations of multiple options. For details, please refer to the table shown below.

Gearhead Type					–	Motor Type							Brake Specifications	Option	
Series	Mount	Frame Size	Shaft Arrangement	Reduction Ratio		Motor Type	Motor Specifications	Motor Power	Number of Phases	Supply Voltage	Standards	Terminal Box	Brake	Option	Option Code
G3	L	28	N	5	–	M	R	08	T	N	N	T	B2	X	AA
①	②	③	④	⑤		⑥	⑦	⑧	⑨	⑩	⑪	⑫	⑬	⑭	⑮

1. Add an “X” and a desired option code to the end of the model name when ordering.
2. If you order multiple options, they will be marked on the nameplate in the order shown in [Nameplate Notation Order] in the table below.
   [Example] If you have ordered AC switching A [AA], box position (top) [TZ], hole position (lower) [H6], encoder (100 P/R) [X0], the order of the option code following the option “X” of the model will be X0TZH6AA.
3. Available options differ depending on the model. For more information, please refer to the page detailing each option.
4. There are options that cannot be used in combination with others. For more information, please refer to the page detailing each option.

* For more information, please contact your nearest Sales Office or the CS Center.

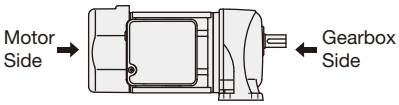

● List of Option Codes

page	Option Code	Description	Nameplate Notation Order	Detailed Page
Motor rear special specifications	X6	The motor will be shipped with the rear-side motor shaft extended.	1	P.1013
	X0	Shipped with an encoder (A/B/Z, 100P/R, line driver).	2	P.1014
	X1	Shipped with an encoder (A/B/Z, 1024P/R, line driver).		
	X2	Shipped with an encoder (A/B/Z, 1024P/R, open collector).		
	X7	The motor will be shipped with a forced fan attached.	3	P.1016
Terminal Box	CC	The motor will be shipped together with a cable gland for T Type terminal box.	4	P.1017
	T3	The position of the terminal box will be changed to the (right) when viewed from the motor side.	5	P.581 to P.585
	T6	The position of the terminal box will be changed to the (bottom) when viewed from the motor side.		
	T9	The position of the terminal box will be changed to the (left) when viewed from the motor side.		
	TZ	The position of the terminal box will be changed to the (top) when viewed from the motor side.		
	H3	The hole direction of the terminal box will be changed to the gearhead side.	6	
	H6	The hole direction of the terminal box is changed to the (bottom). (Note 1)		
	HZ	The hole direction of the terminal box will be changed to the (top). (Note 1)		
Manual release lever	R1	The position of the manual release lever will be changed to the (lower right) when viewed from the motor side.	7	P.590
	R3	The position of the manual release lever will be changed to the (right) when viewed from the motor side.		
	R6	The position of the manual release lever will be changed to the (bottom) when viewed from the motor side.		
	R7	The position of the manual release lever will be changed to the (lower left) when viewed from the motor side.		
	R9	The position of the manual release lever will be changed to the (left) when viewed from the motor side.		
	RZ	The position of the manual release lever will be changed to the (top) when viewed from the motor side.		
Brake wiring for built-in rectifier	AB	The rectifier will be built in the terminal box, and the motor will be shipped with AC switching B connected.	8	P.561
	AA	The rectifier will be built in the terminal box, and the motor will be shipped with AC switching A connected.		
	DC	The rectifier will be built in the terminal box, and the motor will be shipped with DC switching connected.		
Output Shaft	40	The output shaft will be changed to an output shaft with shaft end tapping. (The G3 type standard specification and the water-resistant carbon steel output shaft are provided with shaft end tapping as a standard item.)	9	P.1017
	F2	Changes the bore diameter of the right angle hollow bore from Ø25 to Ø20.		P.1018
	F3	Changes the bore diameter of the right angle hollow bore from Ø30 to Ø25.		
	F4	Changes the bore diameter of the right angle hollow bore from Ø35 to Ø30.		
	F5	Changes the bore diameter of the right angle hollow bore from Ø45 to Ø35.		
	F6	Changes the bore diameter of the right angle hollow bore from Ø45 to Ø40.		
	F7	Changes the bore diameter of the right angle hollow bore from Ø55 to Ø45.		
	F8	Changes the bore diameter of the right angle hollow bore from Ø55 to Ø50.		

Note 1: The gearbox side hole and the motor side hole will always be set in the positions “3” and “9,” respectively, regardless of the position of the terminal box.
Note 2: Option parts, such as torque arms and surge suppressors, are not assigned with option codes.

Motor Shaft Extension

The motor shaft can be extended from the rear end of the motor. If you require motor shaft extension, order it with the option code shown in the table below.
Since the rotary portion will be exposed during use, please take a measure to prevent any contact with it for safety. (Installing a cover, etc.)
For more details, please contact your nearest Sales Office or the CS Center.

■ Target Models

Induction Gearmotors
0.4 kW to 2.2 kW: No Brake/Brakemotor (except water-resistant IP65)

Option	Option Code
X	X6

Model example: Standard specification G3L28N30-MM04TNNTB2 ⇒ Motor shaft extension G3L28N30-MM04TNNTB2XX6

■ Motor Shaft Extension Specifications

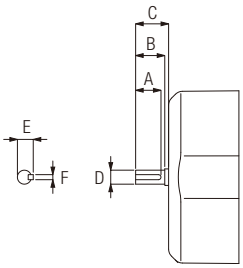

Motor Power	A	B	C	D	E	F
0.4 kW	20	23	26	Ø11h7	12.5	4
0.75 kW	20	23	25	Ø11h7	12.5	4
1.5 kW	27	30	33	Ø14h7	16	5
2.2 kW	27	30	33	Ø14h7	16	5

■ Product Outline Dimensions

When the shaft is extended, the overall length of the motor will increase For details, please refer to the table shown below.

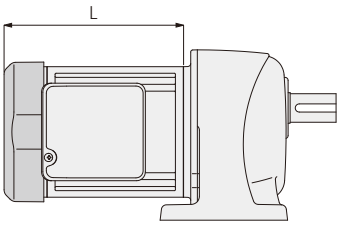

[Figure-1]

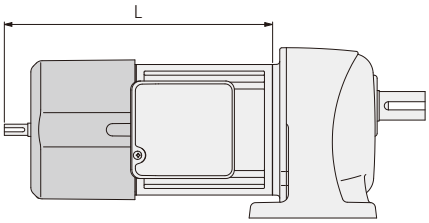

[Figure-2]

Motor Power	Overall length (L)		
	Standard type [Figure-1]		Motor Shaft Extension [Figure-2]
	No Brake	Brakemotor	Common to No brake/brakemotor
0.4 kW	176	196	263
0.75 kW	217	236	301
1.5 kW	252.5	281.5	355.5
2.2 kW	302	331	405

Encoders

An encoder can be attached to the rear of the motor with the specifications shown in the table below. If you require this option, please place an order with the appropriate option code shown in the table below.

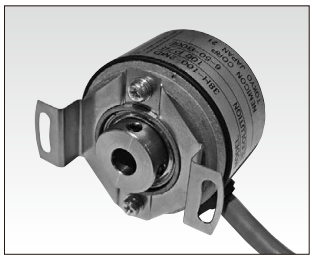

Encoder Appearance
* The encoder will not be visible on the appearance of the product because it will be contained in the fan cover.
* The protective structure of the encoder is IP50.
Please note that this protective structure is different from the protective structure marked on the nameplate.

■ Target Models

Induction Gearmotors

0.1 kW to 2.2 kW No brake/brakemotor (except water-resistant specification IP65)

Note 1: When it is necessary to adjust the gap of the brake or replace the brake unit, please contact us for repair.

■ Encoder Specifications

Option	Option Code	Specification	
		Number of Pulses	Output Method
X	X0	100 p/r	Line Drive
X	X1	1024 p/r	Line Drive
X	X2	1024 p/r	A/B/Z open collector

Note 1: If you require an encoder with specifications not listed in the table, it may be manufactured as a custom order. Please consult us
Note 2: When an encoder is to be mounted by the customer, consult us for specifications with just the shaft and mount for encoder mounting.
Note 3: The encoder and shaft are fixed with a set screw with adhesive in order to prevent loosening.Contact us for shipping the product without adhesive.

Model example: Standard specification G3L28N30-MM04TNNTB2 ⇒ With an encoder G3L28N30-MM04TNNTB2XX0

■ Electrical Specifications

		X0 / X1	X2
Supply Voltage		4.5 to 13.2 VDC	4.5 to 30 VDC
Current Consumption		30 mA MAX	30 mA MAX
Output Voltage	H level	2.5 V or more	-
	L level	0.5 V or below	0.5 V or below (at maximum sink)
Maximum Draw-in Current		20 mA	40 mA
Maximum Response Frequency		120 kHz	120 kHz
Rise and Fall Time		100 ns MAX	1 μs MAX

■ Connector Specifications

X0 / X1		
Hirose Electric: DF3-9S-2C		
Terminal No.	Color	Connection
1	Red	Vcc
2	Black	0V
3	Green	Sig A
4	Blue	Sig $\overline{A}$
5	White	Sig B
6	Gray	Sig $\overline{B}$
7	Yellow	Sig Z
8	Orange	Sig $\overline{Z}$
9	Black	Shield

X2		
Hirose Electric: DF3-6S-2C		
Terminal No.	Color	Connection
1	Red	Vcc
2	Black	0V
3	Blue	Sig A
4	White	Sig B
5	Yellow	Sig Z
6	Black	Shield

■ Waveform Specifications

*The following is the waveform for the reverse motion of the motor.

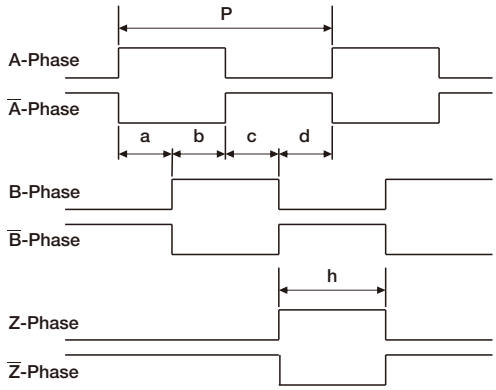

Signal A, B a, b, c, d = (P/4) ± (P/8)
Duty = (P/2) ± (P/4)
Signal Z (P/4) ≤ h ≤ (3P/4)

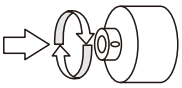

Encoders

Product Appearance Dimensions

When an encoder is installed, the overall length of the motor will increase.
For details, please refer to the table shown below.

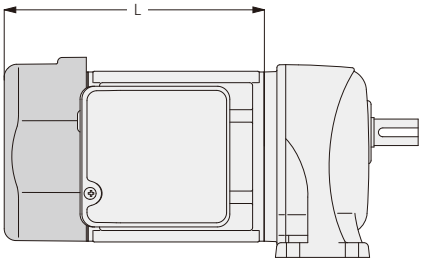

[Standard type appearance example]
*Models without fan cover are available.

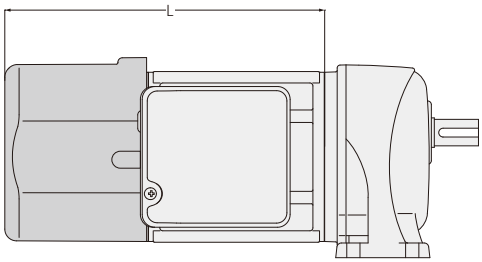

[Encoder-equipped appearance example]

●Induction Gearmotors

Motor Power	Overall length (L)			Encoder Cable Effective Length
	Standard type		With Encoder	
	No Brake	Brakemotor	Common to No brake/ brakemotor	
0.1 kW	114	154	205.5	350
0.2 kW	129	179.5	220.5	350
0.4 kW	176	196	237	350
0.75 kW	217	236	276	300
1.5 kW	252.5	281.5	322.5	250
2.2 kW	302	331	372	250

Note :The product will be shipped with the encoder cable drawn out of the gap of the fan cover.

Forced Fan

A forced fan can be attached to the rear of the motor with the specifications shown in the table below. If you require this option, please place an order with the appropriate option code shown in the table below.

■ Target Models

Induction Gearmotors
0.1 kW to 2.2 kW: No brake/brakemotor (except water-resistant specification IP65)

■ Forced Fan Specifications

Option	Option Code	Specification			
		Supply Voltage	Frequency	Speed	Rated Current
X	X7	200 VAC±10 %	50 Hz	2600 r/min	0.05 A
		200 VAC±10 %	60 Hz	3000 r/min	0.04 A

Model example: Standard specification G3L28N30-MM04TNNTB2 ⇒ With forced fan G3L28N30-MM04TNNTB2XX7

■ Product Outline Dimensions

When a forced fan is installed, the overall length of the motor will increase. For details, please refer to the table shown below.

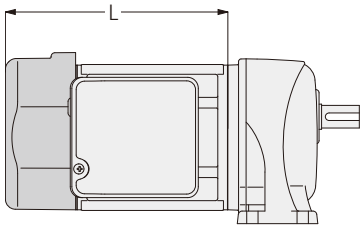

[Figure-1]

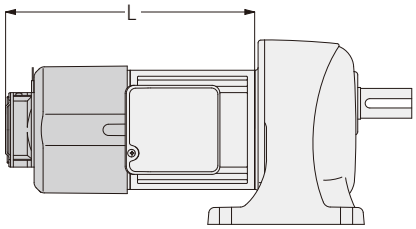

[Figure-2]

Power	Overall length (L)		
	Standard type [Figure-1]		With Forced Fan [Figure-2]
	No Brake	Brakemotor	Common
0.1 kW	114	154	236.5
0.2 kW	129	179.5	251.5
0.4 kW	176	196	268
0.75 kW	217	236	304
1.5 kW	252.5	281.5	353.5
2.2 kW	302	331	403

Note 1: The protective structure of the forced fan is IP10. Please note that this protective structure is different from the protective structure marked on the nameplate.
Note 2: The motor will be shipped with the forced fan cable flied.

Cable Glands

A gearmotor with a T type terminal box can be shipped together with an attachable cable gland. If you require this option, please place an order with the appropriate option code shown in the table below.

■ Target Models

Induction Gearmotors
0.1 kW to 2.2 kW: All models with a T type terminal box

Option	Option Code
X	CC

Model example: Standard specification G3L28N30-MM04TNNTB2 ⇒ With cable gland G3L28N30-MM04TNNTB2XCC

■ Product Outline Dimensions and Specifications

● With a terminal box attached

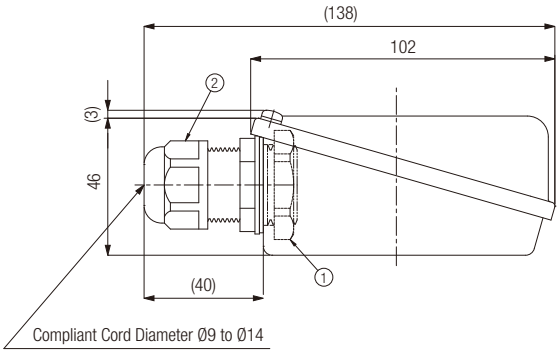

■ Cable Gland Specifications

AVC Corporation of Japan (FGA26S-14B)
Body Material: Nylon 66 (UL94V-2)
IP Rating: IP68/5 atmospheric pressure
Conforming Standard: UL-C & US/CE
Color: Black

Wrench Size Lock/Seal: 33/27

● Tightening Torques (Reference Values)

① Lock nut: 2.4 to 3.4 N·m
② Sealing nut: 1.8 to 2.5 N·m

Note 1: A cable gland will be shipped with the product. Attach the cable gland to the terminal box yourself.
Note 2: Please note that depending on the position of the terminal box and its hole direction, a cable gland may interfere with the peripheral parts when installed, and hinder mounting and wiring.
For more details, please contact your nearest Sales Office or the CS Center.

Output Shaft Tapping (Threading)

The output shaft of the parallel shaft G3 and GA types are tapped to the dimensions shown in the table below (Note 1), but the output shafts of other types are not tapped. If you desire output shaft tapping, we will prepare an output shaft manufactured to the dimensions shown in the table below. Designate these dimensions wherever possible at the time of design. To order tapping, enter “X40” at the end of the model name.
Note 1: Water-resistant specification stainless steel output shafts are not tapped.

Model example: Standard specification H2L22R30-MM02TNNTN ⇒ Output shaft with standard tapping H2L22R30-MM02TNNTNX40

Note 2: The mark “●” in the table indicates a standard stock item. In addition, “▲” indicates that a lead time of about full 10 days is required.
Note 3: Water-resistant specification stainless steel output shafts and dimensions other than those shown in the table below are custom specifications.
Note 4: For lead time, prices, and other details, please contact your nearest Sales Office.
Note 5: The AH2 and AF3F Types are available only with low backlash specifications and require a delivery period of about full 10 days.
For precision 1 arc min and 3 arc min specifications, please contact your nearest Sales Office or the CS Center .

Shaft Diameter (Frame Size)	Size × Pitch × Depth (mm)	G·VG Type (Parallel Shaft)	G3·GA Type (Parallel Shaft)	H·H2·VH Type (Right Angle Shaft)			F2F·FF·F3F·VF3F Type (Right Angle Shaft)		
				L Shaft	R Shaft	T Shaft	L Shaft	R Shaft	T Shaft
12/15	M5 × 0.8 × 12	●	Not Available	●	●	●	▲	▲	▲
18	M6 × 1.0 × 15	●	With Output Shaft Tapping	●	●	●	▲	▲	▲
22/28	M8 × 1.25 × 20	With Output Shaft Tapping		●	●	▲	●	▲	▲
32/40	M10 × 1.5 × 25			●	●	▲	●	▲	▲
50	M12 × 1.75 × 30	Not Available		●	●	▲	Not Available	Not Available	Not Available

Output Shaft Hole Diameter Custom Specifications

Output shafts with the internal diameters shown in the table below are also available for the FS, FAS and F3S types (right angle hollow bore).
Order a desired shaft diameter with the appropriate option code shown in the table below.

Note 1: It is necessary to examine the strength of the shaft to be inserted.
Note 2: Shafts for reduction ratio 1/5 cannot be manufactured.
Note 3: For lead time, prices, and other details, please contact your nearest Sales Office.

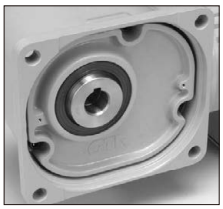

Model name example: Standard specification F3S25N30-MM02TNNTN ⇒ Output shaft diameter Ø20 specification F3S25N30-MM02TNNTNXF2

■ FS/FAS Type (Right Angle Hollow Bore)/Output Shaft Hole Diameter Custom Specifications

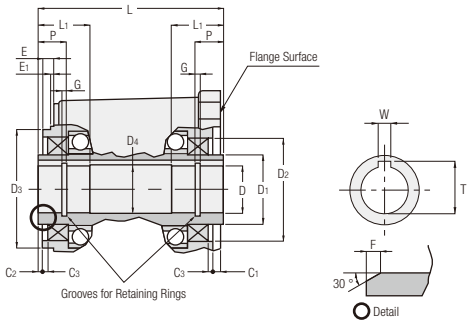

● Right Angle Hollow Bore Detailed Dimensions

Frame Size	Internal Diameter of Right Angle Hollow Bore	D (H8)	D_1	D_2 (H8)	D_3 (h8)	D_4	W	T	L	L_1	P	C_1	C_2	C_3	E	E_1	F	G	Option Code
25	Ø20	Ø20	Ø39	Ø58	Ø66	Ø21	6	22.8	108	27	14	6	2	3	6	0	2	1.15	F2
30	Ø25	Ø25	Ø44	Ø65	Ø75	Ø26	8	28.3	117	33	17	5	2	3	7	0	2	1.35	F3
35	Ø30	Ø30	Ø49	Ø72	Ø85	Ø31	8	33.3	124	38	20	3	2	3	7	0	2	1.35	F4
45	Ø35	Ø35	Ø64	Ø85	Ø100	Ø36	10	38.3	140	50	26	3	2	3	6	0	2	1.75	F5
	Ø40	Ø40	Ø64	Ø85	Ø100	Ø41	12	43.3	140	50	26	3	2	3	6	0	2	1.95	F6
55	Ø45	Ø45	Ø79	Ø100	Ø120	Ø46	14	48.8	181	61	32	5	2	5	10	2	2	1.95	F7
	Ø50	Ø50	Ø79	Ø100	Ø120	Ø51	14	53.8	181	61	32	5	2	5	10	2	2	2.20	F8

■ F3S/AF3S/VF3S Types (Right Angle Hollow Bore)/Output Shaft Hole Diameter Custom Specifications

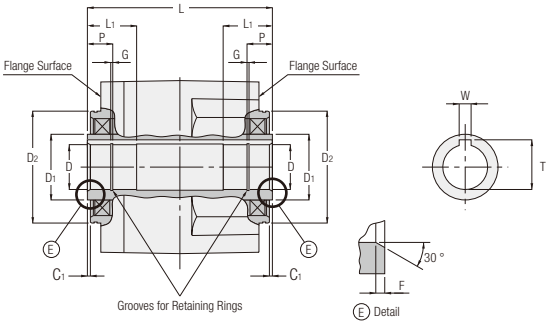

● Right Angle Hollow Bore Detailed Dimensions

Frame Size	Internal Diameter of Right Angle Hollow Bore	D (H8)	D_1	D_2 (h7)	W	T	L	L_1	P	C_1	F	G	Option Code
25	Ø20	Ø20	Ø39	Ø66	6	22.8	118	27	14	2	2	1.15	F2
30	Ø25	Ø25	Ø44	Ø75	8	28.3	124	33	17	2	2	1.35	F3
35	Ø30	Ø30	Ø49	Ø85	8	33.3	142	38	20	2	2	1.35	F4
45	Ø35	Ø35	Ø64	Ø100	10	38.3	168	50	26	2	2	1.75	F5
	Ø40	Ø40	Ø64	Ø100	12	43.3	168	50	26	2	2	1.95	F6

Note 4: The AF3S Type is available only with low backlash specifications.
For precision 1 arc min and 3 arc min specification products, please contact your nearest Sales Office or the CS Center.

Index

P.1020 Induction Gearmotors
P.1031 Battery powered Gearmotors
P.1032 High Precision Gearboxes for Servo Motors
P.1033 Bevel Gearboxes

Index

Induction Gearmotors	
Part Number	Corresponding Page
F2FB-15#-***-S15	462
F2FB-15#-***-S25	462
F2FB-15#-***-S40	462
F2FB-15#-***-T15	462
F2FB-15#-***-T25	462
F2FB-15#-***-T40	462
F2FB-15#-***-T60	462
F2FB-18#-***-S40	463
F2FB-18#-***-S60	463
F2FB-18#-***-S90	463
F2FB-18#-***-T40	463
F2FB-18#-***-T60	463
F2FB-18#-***-T90	463
F2FM-15#-***-S15	462
F2FM-15#-***-S25	462
F2FM-15#-***-S40	462
F2FM-15#-***-T15	462
F2FM-15#-***-T25	462
F2FM-15#-***-T40	462
F2FM-15#-***-T60	462
F2FM-18#-***-S40	463
F2FM-18#-***-S60	463
F2FM-18#-***-S90	463
F2FM-18#-***-T40	463
F2FM-18#-***-T60	463
F2FM-18#-***-T90	463
F2FP-15#-***-S15	502
F2FP-15#-***-S25	502
F2FP-18#-***-S40	503
F2FP-18#-***-S60	503
F2FP-18#-***-S90	503
F2FU-15#-***-S15	502
F2FU-15#-***-S25	502
F2FU-18#-***-S40	503
F2FU-18#-***-S60	503
F2FU-18#-***-S90	503
F2SB-12-***-S15	460
F2SB-12-***-S25	460
F2SB-12-***-S40	460
F2SB-12-***-T15	460
F2SB-12-***-T25	460
F2SB-12-***-T40	460
F2SB-12-***-T60	460
F2SB-15-***-S40	461
F2SB-15-***-S60	461
F2SB-15-***-S90	461
F2SB-15-***-T40	461
F2SB-15-***-T60	461
F2SB-15-***-T90	461
F2SM-12-***-S15	460
F2SM-12-***-S25	460
F2SM-12-***-S40	460
F2SM-12-***-T15	460
F2SM-12-***-T25	460
F2SM-12-***-T40	460
F2SM-12-***-T60	460
F2SM-15-***-S40	461
F2SM-15-***-S60	461
F2SM-15-***-S90	461
F2SM-15-***-T40	461
F2SM-15-***-T60	461
F2SM-15-***-T90	461
F2SP-12-***-S15	500
F2SP-12-***-S25	500
F2SP-15-***-S40	501
F2SP-15-***-S60	501
F2SP-15-***-S90	501
F2SU-12-***-S15	500
F2SU-12-***-S25	500
F2SU-15-***-S40	501
F2SU-15-***-S60	501
F2SU-15-***-S90	501
F2SV-12-***-S15	487
F2SV-12-***-S25	487
F2SV-12-***-T15	487
F2SV-12-***-T25	487
F2SV-12-***-T40	487
F2SV-15-***-S40	488
F2SV-15-***-T40	488
F2SV-15-***-T60	488
F2SV-15-***-T90	488
F2SW-12-***-S15	487
F2SW-12-***-S25	487
F2SW-12-***-T15	487
F2SW-12-***-T25	487
F2SW-12-***-T40	487
F2SW-15-***-S40	488
F2SW-15-***-T40	488
F2SW-15-***-T60	488
F2SW-15-***-T90	488
F3F18#***-MM01T◇◇TB◆	475
F3F18#***-MM01T◇◇TN	475
F3F18#***-MM02T◇◇TB◆	475
F3F18#***-MM02T◇◇TN	475
F3F22#***-MM01T◇◇TB◆	476
F3F22#***-MM01T◇◇TN	476
F3F22#***-MM02T◇◇TB◆	476
F3F22#***-MM02T◇◇TN	476
F3F22#***-MM04T◇◇TB◆	476
F3F22#***-MM04T◇◇TN	476
F3F28#***-MR08T◇◇TB◆	477
F3F28#***-MR08T◇◇TN	477
F3F28#***-MM02T◇◇TB◆	477
F3F28#***-MM02T◇◇TN	477
F3F28#***-MM04T◇◇TB◆	477
F3F28#***-MM04T◇◇TN	477
F3F32#***-MR08T◇◇TB◆	478
F3F32#***-MR08T◇◇TN	478
F3F32#***-MR15T◇◇TB◆	478
F3F32#***-MR15T◇◇TN	478
F3F32#***-MM04T◇◇TB◆	478
F3F32#***-MM04T◇◇TN	478
F3F40#***-MR08T◇◇TB◆	479
F3F40#***-MR08T◇◇TN	479
F3F40#***-MR15T◇◇TB◆	479
F3F40#***-MR15T◇◇TN	479
F3F40#***-MR22T◇◇TB◆	479
F3F40#***-MR22T◇◇TN	479
F3S-20-***-010	506
F3S20N***-MM01S◇JAB2	465
F3S20N***-MM01S◇JAN	465
F3S20N***-MM01T◇◇TB◆	464
F3S20N***-MM01T◇◇TN	464
F3S20N***-MM02T◇◇TB◆	464
F3S20N***-MM02T◇◇TN	464
F3S20N***-WM01T◇◇EN	489
F3S20N***-WM01T◇◇EV◆	489
F3S20N***-WM02T◇◇EN	489
F3S20N***-WM02T◇◇EV◆	489
F3S20S***-WM01T◇◇EN	489
F3S20S***-WM01T◇◇EV◆	489
F3S20S***-WM02T◇◇EN	489
F3S20S***-WM02T◇◇EV◆	489
F3S-25-***-010	506
F3S-25-***-020	506
F3S25N***-MM01S◇JAB2	468
F3S25N***-MM01S◇JAN	468
F3S25N***-MM01T◇◇TB◆	466
F3S25N***-MM01T◇◇TN	466
F3S25N***-MM02C◇JAB2	469
F3S25N***-MM02C◇JAN	469
F3S25N***-MM02T◇◇TB◆	466
F3S25N***-MM02T◇◇TN	466
F3S25N***-MM04T◇◇TB◆	466
F3S25N***-MM04T◇◇TN	466
F3S25N***-WM01T◇◇EN	490
F3S25N***-WM01T◇◇EV◆	490
F3S25N***-WM02T◇◇EN	490

* A shaft arrangement will be indicated as # and a reduction ratio will be indicated as *** in the nomenclature. In addition, a supply voltage code will be indicated as ◇, a supply voltage/certification code will be indicated as ◇◇, and a brake specification will be indicated as ◆.

F3S25N***-WM02T◇◇EV◆	490	F3S35S***-WR15T◇◇EN	492	FAS55S***-WR15T◇◇EN	402
F3S25N***-WM04T◇◇EN	490	F3S35S***-WM04T◇◇EN	492	FAS55S***-WR22T◇◇EN	402
F3S25N***-WM04T◇◇EV◆	490	F3S35S***-WM04T◇◇EV◆	492	FAS55S***-WM04T◇◇EN	402
F3S25S***-WM01T◇◇EN	490	F3S-45-***-075	509	FAS55S***-WM04T◇◇EV◆	402
F3S25S***-WM01T◇◇EV◆	490	F3S-45-***-150	509	FASS-55-***-150	418
F3S25S***-WM02T◇◇EN	490	F3S-45-***-220	509	FASS-55-***-220	418
F3S25S***-WM02T◇◇EV◆	490	F3S45N***-MR08T◇◇TB◆	474	FF22#***-MM01T◇◇TB◆	387
F3S25S***-WM04T◇◇EN	490	F3S45N***-MR08T◇◇TN	474	FF22#***-MM01T◇◇TN	387
F3S25S***-WM04T◇◇EV◆	490	F3S45N***-MR15T◇◇TB◆	474	FF28#***-MM02T◇◇TB◆	387
F3S-30-***-020	507	F3S45N***-MR15T◇◇TN	474	FF28#***-MM02T◇◇TN	387
F3S-30-***-040	507	F3S45N***-MR22T◇◇TB◆	474	FF32#***-MM04T◇◇TB◆	388
F3S30N***-MR08T◇◇TB◆	470	F3S45N***-MR22T◇◇TN	474	FF32#***-MM04T◇◇TN	388
F3S30N***-MR08T◇◇TN	470	F3S45N***-WR08T◇◇EN	493	FF40#***-MR08T◇◇TB◆	388
F3S30N***-MM02C◇JAB2	471	F3S45N***-WR08T◇◇EV◆	493	FF40#***-MR08T◇◇TN	388
F3S30N***-MM02C◇JAN	471	F3S45N***-WR15T◇◇EN	493	FS-25-***-010	407
F3S30N***-MM02T◇◇TB◆	470	F3S45N***-WR22T◇◇EN	493	FS25N***-MM01S◇JAB2	376
F3S30N***-MM02T◇◇TN	470	F3S45S***-WR08T◇◇EN	493	FS25N***-MM01S◇JAN	376
F3S30N***-MM04C◇JAB2	471	F3S45S***-WR08T◇◇EV◆	493	FS25N***-MM01T◇◇TB◆	375
F3S30N***-MM04C◇JAN	471	F3S45S***-WR15T◇◇EN	493	FS25N***-MM01T◇◇TN	375
F3S30N***-MM04T◇◇TB◆	470	F3S45S***-WR22T◇◇EN	493	FS25N***-WM01T◇◇EN	397
F3S30N***-MM04T◇◇TN	470	F3SS-20-***-010	512	FS25N***-WM01T◇◇EV◆	397
F3S30N***-WR08T◇◇EN	491	F3SS-25-***-010	512	FS25S***-WM01T◇◇EN	397
F3S30N***-WR08T◇◇EV◆	491	F3SS-25-***-020	512	FS25S***-WM01T◇◇EV◆	397
F3S30N***-WM02T◇◇EN	491	F3SS-30-***-020	513	FS-30-***-020	407
F3S30N***-WM02T◇◇EV◆	491	F3SS-30-***-040	513	FS30N***-MM01T◇◇TB◆	377
F3S30N***-WM04T◇◇EN	491	F3SS-35-***-040	514	FS30N***-MM01T◇◇TN	377
F3S30N***-WM04T◇◇EV◆	491	F3SS-35-***-075	514	FS30N***-MM02C◇JAB2	378
F3S30S***-WR08T◇◇EN	491	F3SS-45-***-075	515	FS30N***-MM02C◇JAN	378
F3S30S***-WR08T◇◇EV◆	491	F3SS-45-***-150	515	FS30N***-MM02T◇◇TB◆	377
F3S30S***-WM02T◇◇EN	491	F3SS-45-***-220	515	FS30N***-MM02T◇◇TN	377
F3S30S***-WM02T◇◇EV◆	491	FAS-55-***-150	410	FS30N***-WM01T◇◇EN	398
F3S30S***-WM04T◇◇EN	491	FAS-55-***-220	410	FS30N***-WM01T◇◇EV◆	398
F3S30S***-WM04T◇◇EV◆	491	FAS55N***-MR08T◇◇TB◆	385	FS30N***-WM02T◇◇EN	398
F3S-35-***-040	508	FAS55N***-MR08T◇◇TN	385	FS30N***-WM02T◇◇EV◆	398
F3S-35-***-075	508	FAS55N***-MR15T◇◇TB◆	385	FS30S***-WM01T◇◇EN	398
F3S35N***-MR08T◇◇TB◆	472	FAS55N***-MR15T◇◇TN	385	FS30S***-WM01T◇◇EV◆	398
F3S35N***-MR08T◇◇TN	472	FAS55N***-MR22T◇◇TB◆	385	FS30S***-WM02T◇◇EN	398
F3S35N***-MR15T◇◇TB◆	472	FAS55N***-MR22T◇◇TN	385	FS30S***-WM02T◇◇EV◆	398
F3S35N***-MR15T◇◇TN	472	FAS55N***-MM04C◇JAB2	386	FS-35-***-040	408
F3S35N***-MM04C◇JAB2	473	FAS55N***-MM04C◇JAN	386	FS35N***-MM01T◇◇TB◆	379
F3S35N***-MM04C◇JAN	473	FAS55N***-MM04T◇◇TB◆	385	FS35N***-MM01T◇◇TN	379
F3S35N***-MM04T◇◇TB◆	472	FAS55N***-MM04T◇◇TN	385	FS35N***-MM02C◇JAB2	380
F3S35N***-MM04T◇◇TN	472	FAS55N***-WR08T◇◇EN	402	FS35N***-MM02C◇JAN	380
F3S35N***-WR08T◇◇EN	492	FAS55N***-WR08T◇◇EV◆	402	FS35N***-MM02T◇◇TB◆	379
F3S35N***-WR08T◇◇EV◆	492	FAS55N***-WR15T◇◇EN	402	FS35N***-MM02T◇◇TN	379
F3S35N***-WR15T◇◇EN	492	FAS55N***-WR22T◇◇EN	402	FS35N***-MM04C◇JAB2	380
F3S35N***-WM04T◇◇EN	492	FAS55N***-WM04T◇◇EN	402	FS35N***-MM04C◇JAN	380
F3S35N***-WM04T◇◇EV◆	492	FAS55N***-WM04T◇◇EV◆	402	FS35N***-MM04T◇◇TB◆	379
F3S35S***-WR08T◇◇EN	492	FAS55S***-WR08T◇◇EN	402	FS35N***-MM04T◇◇TN	379
F3S35S***-WR08T◇◇EV◆	492	FAS55S***-WR08T◇◇EV◆	402	FS35N***-WM01T◇◇EN	399

* A shaft arrangement will be indicated as # and a reduction ratio will be indicated as *** in the nomenclature. In addition, a supply voltage code will be indicated as ◇, a supply voltage/certification code will be indicated as ◇◇, and a brake specification will be indicated as ◆.

FS35N***-WM01T◇◇EV◆	399	FS55N***-WM04T◇◇EN	401	G3F22N***-MM04T◇◇TB◆	110
FS35N***-WM02T◇◇EN	399	FS55N***-WM04T◇◇EV◆	401	G3F22N***-MM04T◇◇TN	110
FS35N***-WM02T◇◇EV◆	399	FS55S***-WR08T◇◇EN	401	G3F22N***-WM01T◇◇EN	152
FS35N***-WM04T◇◇EN	399	FS55S***-WR08T◇◇EV◆	401	G3F22N***-WM01T◇◇EV◆	152
FS35N***-WM04T◇◇EV◆	399	FS55S***-WR15T◇◇EN	401	G3F22N***-WM02T◇◇EN	152
FS35S***-WM01T◇◇EN	399	FS55S***-WR22T◇◇EN	401	G3F22N***-WM02T◇◇EV◆	152
FS35S***-WM01T◇◇EV◆	399	FS55S***-WM04T◇◇EN	401	G3F22N***-WM04T◇◇EN	152
FS35S***-WM02T◇◇EN	399	FS55S***-WM04T◇◇EV◆	401	G3F22N***-WM04T◇◇EV◆	152
FS35S***-WM02T◇◇EV◆	399	FSS-25-***-010	415	G3F22S***-WM01T◇◇EN	152
FS35S***-WM04T◇◇EN	399	FSS-30-***-020	415	G3F22S***-WM01T◇◇EV◆	152
FS35S***-WM04T◇◇EV◆	399	FSS-35-***-040	416	G3F22S***-WM02T◇◇EN	152
FS-45-***-075	408	FSS-45-***-075	416	G3F22S***-WM02T◇◇EV◆	152
FS45N***-MR08T◇◇TB◆	381	FSS-55-***-150	417	G3F22S***-WM04T◇◇EN	152
FS45N***-MR08T◇◇TN	381	FSS-55-***-220	417	G3F22S***-WM04T◇◇EV◆	152
FS45N***-MM02C◇JAB2	382	G3F-18-***-010	195	G3F-28-***-010	196
FS45N***-MM02C◇JAN	382	G3F-18-***-020	195	G3F-28-***-020	196
FS45N***-MM02T◇◇TB◆	381	G3F18N***-EM01T◇JTN	167	G3F-28-***-040	196
FS45N***-MM02T◇◇TN	381	G3F18N***-EM02T◇JTN	167	G3F-28-***-075	196
FS45N***-MM04C◇JAB2	382	G3F18N***-MM01C◇JAB2	108	G3F28N***-ER08T◇JTN	168
FS45N***-MM04C◇JAN	382	G3F18N***-MM01C◇JAN	108	G3F28N***-EM02T◇JTN	168
FS45N***-MM04T◇◇TB◆	381	G3F18N***-MM01T◇◇TB◆	107	G3F28N***-EM04T◇JTN	168
FS45N***-MM04T◇◇TN	381	G3F18N***-MM01T◇◇TN	107	G3F28N***-MR08T◇◇TB◆	113
FS45N***-WR08T◇◇EN	400	G3F18N***-MM02C◇JAB2	108	G3F28N***-MR08T◇◇TN	113
FS45N***-WR08T◇◇EV◆	400	G3F18N***-MM02C◇JAN	108	G3F28N***-MM01C◇JAB2	114
FS45N***-WM02T◇◇EN	400	G3F18N***-MM02T◇◇TB◆	107	G3F28N***-MM01C◇JAN	114
FS45N***-WM02T◇◇EV◆	400	G3F18N***-MM02T◇◇TN	107	G3F28N***-MM01T◇◇TB◆	113
FS45N***-WM04T◇◇EN	400	G3F18N***-WM01T◇◇EN	151	G3F28N***-MM01T◇◇TN	113
FS45N***-WM04T◇◇EV◆	400	G3F18N***-WM01T◇◇EV◆	151	G3F28N***-MM02C◇JAB2	114
FS45S***-WR08T◇◇EN	400	G3F18N***-WM02T◇◇EN	151	G3F28N***-MM02C◇JAN	114
FS45S***-WR08T◇◇EV◆	400	G3F18N***-WM02T◇◇EV◆	151	G3F28N***-MM02T◇◇TB◆	113
FS45S***-WM02T◇◇EN	400	G3F18S***-WM01T◇◇EN	151	G3F28N***-MM02T◇◇TN	113
FS45S***-WM02T◇◇EV◆	400	G3F18S***-WM01T◇◇EV◆	151	G3F28N***-MM04C◇JAB2	114
FS45S***-WM04T◇◇EN	400	G3F18S***-WM02T◇◇EN	151	G3F28N***-MM04C◇JAN	114
FS45S***-WM04T◇◇EV◆	400	G3F18S***-WM02T◇◇EV◆	151	G3F28N***-MM04T◇◇TB◆	113
FS-55-***-150	409	G3F-22-***-010	195	G3F28N***-MM04T◇◇TN	113
FS-55-***-220	409	G3F-22-***-020	195	G3F28N***-WR08T◇◇EN	153
FS55N***-MR08T◇◇TB◆	383	G3F-22-***-040	195	G3F28N***-WR08T◇◇EV◆	153
FS55N***-MR08T◇◇TN	383	G3F22N***-EM01T◇JTN	168	G3F28N***-WM01T◇◇EN	153
FS55N***-MR15T◇◇TB◆	383	G3F22N***-EM02T◇JTN	168	G3F28N***-WM01T◇◇EV◆	153
FS55N***-MR15T◇◇TN	383	G3F22N***-EM04T◇JTN	168	G3F28N***-WM02T◇◇EN	153
FS55N***-MR22T◇◇TB◆	383	G3F22N***-MM01C◇JAB2	111	G3F28N***-WM02T◇◇EV◆	153
FS55N***-MR22T◇◇TN	383	G3F22N***-MM01C◇JAN	111	G3F28N***-WM04T◇◇EN	153
FS55N***-MM04C◇JAB2	384	G3F22N***-MM01T◇◇TB◆	110	G3F28N***-WM04T◇◇EV◆	153
FS55N***-MM04C◇JAN	384	G3F22N***-MM01T◇◇TN	110	G3F28S***-WR08T◇◇EN	153
FS55N***-MM04T◇◇TB◆	383	G3F22N***-MM02C◇JAB2	111	G3F28S***-WR08T◇◇EV◆	153
FS55N***-MM04T◇◇TN	383	G3F22N***-MM02C◇JAN	111	G3F28S***-WM01T◇◇EN	153
FS55N***-WR08T◇◇EN	401	G3F22N***-MM02T◇◇TB◆	110	G3F28S***-WM01T◇◇EV◆	153
FS55N***-WR08T◇◇EV◆	401	G3F22N***-MM02T◇◇TN	110	G3F28S***-WM02T◇◇EN	153
FS55N***-WR15T◇◇EN	401	G3F22N***-MM04C◇JAB2	111	G3F28S***-WM02T◇◇EV◆	153
FS55N***-WR22T◇◇EN	401	G3F22N***-MM04C◇JAN	111	G3F28S***-WM04T◇◇EN	153

* A reduction ratio will be indicated as *** in the nomenclature. In addition, a supply voltage code will be indicated as ◇, a supply voltage/certification code will be indicated as ◇◇, and a brake specification will be indicated as ◆.

G3F28S∗∗∗-WM04T◇◇EV◆	153	G3F40N∗∗∗-MR15T◇◇TB◆	119	G3F50S∗∗∗-WR15T◇◇EN	156
G3F-32-∗∗∗-010	196	G3F40N∗∗∗-MR15T◇◇TN	119	G3F50S∗∗∗-WR22T◇◇EN	156
G3F-32-∗∗∗-020	196	G3F40N∗∗∗-MR22T◇◇TB◆	119	G3F50S∗∗∗-WM04T◇◇EN	156
G3F-32-∗∗∗-040	196	G3F40N∗∗∗-MR22T◇◇TN	119	G3F50S∗∗∗-WM04T◇◇EV◆	156
G3F-32-∗∗∗-075	196	G3F40N∗∗∗-MM02C◇JAB2	120	G3FS-18-∗∗∗-010	209
G3F-32-∗∗∗-150	196	G3F40N∗∗∗-MM02C◇JAN	120	G3FS-18-∗∗∗-020	209
G3F32N∗∗∗-ER08T◇JTN	169	G3F40N∗∗∗-MM02T◇◇TB◆	119	G3FS-22-∗∗∗-010	209
G3F32N∗∗∗-EM04T◇JTN	169	G3F40N∗∗∗-MM02T◇◇TN	119	G3FS-22-∗∗∗-020	209
G3F32N∗∗∗-MR08T◇◇TB◆	116	G3F40N∗∗∗-MM04C◇JAB2	120	G3FS-22-∗∗∗-040	209
G3F32N∗∗∗-MR08T◇◇TN	116	G3F40N∗∗∗-MM04C◇JAN	120	G3FS-28-∗∗∗-010	210
G3F32N∗∗∗-MR15T◇◇TB◆	116	G3F40N∗∗∗-MM04T◇◇TB◆	119	G3FS-28-∗∗∗-020	210
G3F32N∗∗∗-MR15T◇◇TN	116	G3F40N∗∗∗-MM04T◇◇TN	119	G3FS-28-∗∗∗-040	210
G3F32N∗∗∗-MM01C◇JAB2	117	G3F40N∗∗∗-WR08T◇◇EN	155	G3FS-28-∗∗∗-075	210
G3F32N∗∗∗-MM01C◇JAN	117	G3F40N∗∗∗-WR08T◇◇EV◆	155	G3FS-32-∗∗∗-010	211
G3F32N∗∗∗-MM01T◇◇TB◆	116	G3F40N∗∗∗-WR15T◇◇EN	155	G3FS-32-∗∗∗-020	211
G3F32N∗∗∗-MM01T◇◇TN	116	G3F40N∗∗∗-WR22T◇◇EN	155	G3FS-32-∗∗∗-040	211
G3F32N∗∗∗-MM02C◇JAB2	117	G3F40N∗∗∗-WM02T◇◇EN	155	G3FS-32-∗∗∗-075	211
G3F32N∗∗∗-MM02C◇JAN	117	G3F40N∗∗∗-WM02T◇◇EV◆	155	G3FS-32-∗∗∗-150	211
G3F32N∗∗∗-MM02T◇◇TB◆	116	G3F40N∗∗∗-WM04T◇◇EN	155	G3FS-40-∗∗∗-020	211
G3F32N∗∗∗-MM02T◇◇TN	116	G3F40N∗∗∗-WM04T◇◇EV◆	155	G3FS-40-∗∗∗-040	211
G3F32N∗∗∗-MM04C◇JAB2	117	G3F40S∗∗∗-WR08T◇◇EN	155	G3FS-40-∗∗∗-075	211
G3F32N∗∗∗-MM04C◇JAN	117	G3F40S∗∗∗-WR08T◇◇EV◆	155	G3FS-40-∗∗∗-150	211
G3F32N∗∗∗-MM04T◇◇TB◆	116	G3F40S∗∗∗-WR15T◇◇EN	155	G3FS-40-∗∗∗-220	211
G3F32N∗∗∗-MM04T◇◇TN	116	G3F40S∗∗∗-WR22T◇◇EN	155	G3FS-50-∗∗∗-040	212
G3F32N∗∗∗-WR08T◇◇EN	154	G3F40S∗∗∗-WM02T◇◇EN	155	G3FS-50-∗∗∗-075	212
G3F32N∗∗∗-WR08T◇◇EV◆	154	G3F40S∗∗∗-WM02T◇◇EV◆	155	G3FS-50-∗∗∗-150	212
G3F32N∗∗∗-WR15T◇◇EN	154	G3F40S∗∗∗-WM04T◇◇EN	155	G3FS-50-∗∗∗-220	212
G3F32N∗∗∗-WM01T◇◇EN	154	G3F40S∗∗∗-WM04T◇◇EV◆	155	G3K-18-∗∗∗-010	198
G3F32N∗∗∗-WM01T◇◇EV◆	154	G3F-50-∗∗∗-040	197	G3K-18-∗∗∗-020	198
G3F32N∗∗∗-WM02T◇◇EN	154	G3F-50-∗∗∗-075	197	G3K18N∗∗∗-EM01T◇JTN	170
G3F32N∗∗∗-WM02T◇◇EV◆	154	G3F-50-∗∗∗-150	197	G3K18N∗∗∗-EM02T◇JTN	170
G3F32N∗∗∗-WM04T◇◇EN	154	G3F-50-∗∗∗-220	197	G3K18N∗∗∗-MM01C◇JAB2	123
G3F32N∗∗∗-WM04T◇◇EV◆	154	G3F50N∗∗∗-MR08T◇◇TB◆	121	G3K18N∗∗∗-MM01C◇JAN	123
G3F32S∗∗∗-WR08T◇◇EN	154	G3F50N∗∗∗-MR08T◇◇TN	121	G3K18N∗∗∗-MM01T◇◇TB◆	122
G3F32S∗∗∗-WR08T◇◇EV◆	154	G3F50N∗∗∗-MR15T◇◇TB◆	121	G3K18N∗∗∗-MM01T◇◇TN	122
G3F32S∗∗∗-WR15T◇◇EN	154	G3F50N∗∗∗-MR15T◇◇TN	121	G3K18N∗∗∗-MM02C◇JAB2	123
G3F32S∗∗∗-WM01T◇◇EN	154	G3F50N∗∗∗-MR22T◇◇TB◆	121	G3K18N∗∗∗-MM02C◇JAN	123
G3F32S∗∗∗-WM01T◇◇EV◆	154	G3F50N∗∗∗-MR22T◇◇TN	121	G3K18N∗∗∗-MM02T◇◇TB◆	122
G3F32S∗∗∗-WM02T◇◇EN	154	G3F50N∗∗∗-MM04C◇JAB2	122	G3K18N∗∗∗-MM02T◇◇TN	122
G3F32S∗∗∗-WM02T◇◇EV◆	154	G3F50N∗∗∗-MM04C◇JAN	122	G3K18N∗∗∗-WM01T◇◇EN	157
G3F32S∗∗∗-WM04T◇◇EN	154	G3F50N∗∗∗-MM04T◇◇TB◆	121	G3K18N∗∗∗-WM01T◇◇EV◆	157
G3F32S∗∗∗-WM04T◇◇EV◆	154	G3F50N∗∗∗-MM04T◇◇TN	121	G3K18N∗∗∗-WM02T◇◇EN	157
G3F-40-∗∗∗-020	197	G3F50N∗∗∗-WR08T◇◇EN	156	G3K18N∗∗∗-WM02T◇◇EV◆	157
G3F-40-∗∗∗-040	197	G3F50N∗∗∗-WR08T◇◇EV◆	156	G3K18S∗∗∗-WM01T◇◇EN	157
G3F-40-∗∗∗-075	197	G3F50N∗∗∗-WR15T◇◇EN	156	G3K18S∗∗∗-WM01T◇◇EV◆	157
G3F-40-∗∗∗-150	197	G3F50N∗∗∗-WR22T◇◇EN	156	G3K18S∗∗∗-WM02T◇◇EN	157
G3F-40-∗∗∗-220	197	G3F50N∗∗∗-WM04T◇◇EN	156	G3K18S∗∗∗-WM02T◇◇EV◆	157
G3F40N∗∗∗-ER08T◇JTN	169	G3F50N∗∗∗-WM04T◇◇EV◆	156	G3K-22-∗∗∗-010	198
G3F40N∗∗∗-MR08T◇◇TB◆	119	G3F50S∗∗∗-WR08T◇◇EN	156	G3K-22-∗∗∗-020	198
G3F40N∗∗∗-MR08T◇◇TN	119	G3F50S∗∗∗-WR08T◇◇EV◆	156	G3K-22-∗∗∗-040	198

* A reduction ratio will be indicated as ∗∗∗ in the nomenclature. In addition, a supply voltage code will be indicated as ◇, a supply voltage/certification code will be indicated as ◇◇, and a brake specification will be indicated as ◆.

G3K22N∗∗∗-EM01T◇JTN	170	G3K28N∗∗∗-WM01T◇◇EN	159	G3K32S∗∗∗-WM01T◇◇EV◆	160
G3K22N∗∗∗-EM02T◇JTN	170	G3K28N∗∗∗-WM01T◇◇EV◆	159	G3K32S∗∗∗-WM02T◇◇EN	160
G3K22N∗∗∗-EM04T◇JTN	170	G3K28N∗∗∗-WM02T◇◇EN	159	G3K32S∗∗∗-WM02T◇◇EV◆	160
G3K22N∗∗∗-MM01C◇JAB2	126	G3K28N∗∗∗-WM02T◇◇EV◆	159	G3K32S∗∗∗-WM04T◇◇EN	160
G3K22N∗∗∗-MM01C◇JAN	126	G3K28N∗∗∗-WM04T◇◇EN	159	G3K32S∗∗∗-WM04T◇◇EV◆	160
G3K22N∗∗∗-MM01T◇◇TB◆	125	G3K28N∗∗∗-WM04T◇◇EV◆	159	G3KS-18-∗∗∗-010	212
G3K22N∗∗∗-MM01T◇◇TN	125	G3K28S∗∗∗-WR08T◇◇EN	159	G3KS-18-∗∗∗-020	212
G3K22N∗∗∗-MM02C◇JAB2	126	G3K28S∗∗∗-WR08T◇◇EV◆	159	G3KS-22-∗∗∗-010	213
G3K22N∗∗∗-MM02C◇JAN	126	G3K28S∗∗∗-WM01T◇◇EN	159	G3KS-22-∗∗∗-020	213
G3K22N∗∗∗-MM02T◇◇TB◆	125	G3K28S∗∗∗-WM01T◇◇EV◆	159	G3KS-22-∗∗∗-040	213
G3K22N∗∗∗-MM02T◇◇TN	125	G3K28S∗∗∗-WM02T◇◇EN	159	G3KS-28-∗∗∗-010	214
G3K22N∗∗∗-MM04C◇JAB2	126	G3K28S∗∗∗-WM02T◇◇EV◆	159	G3KS-28-∗∗∗-020	214
G3K22N∗∗∗-MM04C◇JAN	126	G3K28S∗∗∗-WM04T◇◇EN	159	G3KS-28-∗∗∗-040	214
G3K22N∗∗∗-MM04T◇◇TB◆	125	G3K28S∗∗∗-WM04T◇◇EV◆	159	G3KS-28-∗∗∗-075	214
G3K22N∗∗∗-MM04T◇◇TN	125	G3K-32-∗∗∗-010	199	G3KS-32-∗∗∗-010	215
G3K22N∗∗∗-WM01T◇◇EN	158	G3K-32-∗∗∗-020	199	G3KS-32-∗∗∗-020	215
G3K22N∗∗∗-WM01T◇◇EV◆	158	G3K-32-∗∗∗-040	199	G3KS-32-∗∗∗-040	215
G3K22N∗∗∗-WM02T◇◇EN	158	G3K-32-∗∗∗-075	199	G3KS-32-∗∗∗-075	215
G3K22N∗∗∗-WM02T◇◇EV◆	158	G3K-32-∗∗∗-150	199	G3KS-32-∗∗∗-150	215
G3K22N∗∗∗-WM04T◇◇EN	158	G3K32N∗∗∗-ER08T◇JTN	171	G3L-18-∗∗∗-010	191
G3K22N∗∗∗-WM04T◇◇EV◆	158	G3K32N∗∗∗-EM04T◇JTN	171	G3L-18-∗∗∗-020	191
G3K22S∗∗∗-WM01T◇◇EN	158	G3K32N∗∗∗-MR08T◇◇TB◆	131	G3L18N∗∗∗-EM01T◇JTN	165
G3K22S∗∗∗-WM01T◇◇EV◆	158	G3K32N∗∗∗-MR08T◇◇TN	131	G3L18N∗∗∗-EM02T◇JTN	165
G3K22S∗∗∗-WM02T◇◇EN	158	G3K32N∗∗∗-MR15T◇◇TB◆	131	G3L18N∗∗∗-MM01C◇JAB2	87
G3K22S∗∗∗-WM02T◇◇EV◆	158	G3K32N∗∗∗-MR15T◇◇TN	131	G3L18N∗∗∗-MM01C◇JAN	87
G3K22S∗∗∗-WM04T◇◇EN	158	G3K32N∗∗∗-MM01C◇JAB2	132	G3L18N∗∗∗-MM01T◇◇TB◆	86
G3K22S∗∗∗-WM04T◇◇EV◆	158	G3K32N∗∗∗-MM01C◇JAN	132	G3L18N∗∗∗-MM01T◇◇TN	86
G3K-28-∗∗∗-010	199	G3K32N∗∗∗-MM01T◇◇TB◆	131	G3L18N∗∗∗-MM02C◇JAB2	87
G3K-28-∗∗∗-020	199	G3K32N∗∗∗-MM01T◇◇TN	131	G3L18N∗∗∗-MM02C◇JAN	87
G3K-28-∗∗∗-040	199	G3K32N∗∗∗-MM02C◇JAB2	132	G3L18N∗∗∗-MM02T◇◇TB◆	86
G3K-28-∗∗∗-075	199	G3K32N∗∗∗-MM02C◇JAN	132	G3L18N∗∗∗-MM02T◇◇TN	86
G3K28N∗∗∗-ER08T◇JTN	171	G3K32N∗∗∗-MM02T◇◇TB◆	131	G3L18N∗∗∗-WM01T◇◇EN	143
G3K28N∗∗∗-EM02T◇JTN	171	G3K32N∗∗∗-MM02T◇◇TN	131	G3L18N∗∗∗-WM01T◇◇EV◆	143
G3K28N∗∗∗-EM04T◇JTN	171	G3K32N∗∗∗-MM04C◇JAB2	132	G3L18N∗∗∗-WM02T◇◇EN	143
G3K28N∗∗∗-MR08T◇◇TB◆	128	G3K32N∗∗∗-MM04C◇JAN	132	G3L18N∗∗∗-WM02T◇◇EV◆	143
G3K28N∗∗∗-MR08T◇◇TN	128	G3K32N∗∗∗-MM04T◇◇TB◆	131	G3L18S∗∗∗-WM01T◇◇EN	143
G3K28N∗∗∗-MM01C◇JAB2	129	G3K32N∗∗∗-MM04T◇◇TN	131	G3L18S∗∗∗-WM01T◇◇EV◆	143
G3K28N∗∗∗-MM01C◇JAN	129	G3K32N∗∗∗-WR08T◇◇EN	160	G3L18S∗∗∗-WM02T◇◇EN	143
G3K28N∗∗∗-MM01T◇◇TB◆	128	G3K32N∗∗∗-WR08T◇◇EV◆	160	G3L18S∗∗∗-WM02T◇◇EV◆	143
G3K28N∗∗∗-MM01T◇◇TN	128	G3K32N∗∗∗-WR15T◇◇EN	160	G3L-22-∗∗∗-010	191
G3K28N∗∗∗-MM02C◇JAB2	129	G3K32N∗∗∗-WM01T◇◇EN	160	G3L-22-∗∗∗-020	191
G3K28N∗∗∗-MM02C◇JAN	129	G3K32N∗∗∗-WM01T◇◇EV◆	160	G3L-22-∗∗∗-040	191
G3K28N∗∗∗-MM02T◇◇TB◆	128	G3K32N∗∗∗-WM02T◇◇EN	160	G3L22N∗∗∗-EM01T◇JTN	165
G3K28N∗∗∗-MM02T◇◇TN	128	G3K32N∗∗∗-WM02T◇◇EV◆	160	G3L22N∗∗∗-EM02T◇JTN	165
G3K28N∗∗∗-MM04C◇JAB2	129	G3K32N∗∗∗-WM04T◇◇EN	160	G3L22N∗∗∗-EM04T◇JTN	165
G3K28N∗∗∗-MM04C◇JAN	129	G3K32N∗∗∗-WM04T◇◇EV◆	160	G3L22N∗∗∗-MM01C◇JAB2	90
G3K28N∗∗∗-MM04T◇◇TB◆	128	G3K32S∗∗∗-WR08T◇◇EN	160	G3L22N∗∗∗-MM01C◇JAN	90
G3K28N∗∗∗-MM04T◇◇TN	128	G3K32S∗∗∗-WR08T◇◇EV◆	160	G3L22N∗∗∗-MM01T◇◇TB◆	89
G3K28N∗∗∗-WR08T◇◇EN	159	G3K32S∗∗∗-WR15T◇◇EN	160	G3L22N∗∗∗-MM01T◇◇TN	89
G3K28N∗∗∗-WR08T◇◇EV◆	159	G3K32S∗∗∗-WM01T◇◇EN	160	G3L22N∗∗∗-MM02C◇JAB2	90

* A reduction ratio will be indicated as ∗∗∗ in the nomenclature. In addition, a supply voltage code will be indicated as ◇, a supply voltage/certification code will be indicated as ◇◇, and a brake specification will be indicated as ◆.

G3L22N***-MM02C◇JAN	90	G3L28S***-WM01T◇◇EN	145	G3L-40-***-150	193
G3L22N***-MM02T◇◇TB◆	89	G3L28S***-WM01T◇◇EV◆	145	G3L-40-***-220	193
G3L22N***-MM02T◇◇TN	89	G3L28S***-WM02T◇◇EN	145	G3L40N***-ER08T◇JTN	167
G3L22N***-MM04C◇JAB2	90	G3L28S***-WM02T◇◇EV◆	145	G3L40N***-MR08T◇◇TB◆	98
G3L22N***-MM04C◇JAN	90	G3L28S***-WM04T◇◇EN	145	G3L40N***-MR08T◇◇TN	98
G3L22N***-MM04T◇◇TB◆	89	G3L28S***-WM04T◇◇EV◆	145	G3L40N***-MR15T◇◇TB◆	98
G3L22N***-MM04T◇◇TN	89	G3L-32-***-010	192	G3L40N***-MR15T◇◇TN	98
G3L22N***-WM01T◇◇EN	144	G3L-32-***-020	192	G3L40N***-MR22T◇◇TB◆	98
G3L22N***-WM01T◇◇EV◆	144	G3L-32-***-040	192	G3L40N***-MR22T◇◇TN	98
G3L22N***-WM02T◇◇EN	144	G3L-32-***-075	192	G3L40N***-MM02C◇JAB2	99
G3L22N***-WM02T◇◇EV◆	144	G3L-32-***-150	192	G3L40N***-MM02C◇JAN	99
G3L22N***-WM04T◇◇EN	144	G3L32N***-ER08T◇JTN	166	G3L40N***-MM02T◇◇TB◆	98
G3L22N***-WM04T◇◇EV◆	144	G3L32N***-EM04T◇JTN	166	G3L40N***-MM02T◇◇TN	98
G3L22S***-WM01T◇◇EN	144	G3L32N***-MR08T◇◇TB◆	95	G3L40N***-MM04C◇JAB2	99
G3L22S***-WM01T◇◇EV◆	144	G3L32N***-MR08T◇◇TN	95	G3L40N***-MM04C◇JAN	99
G3L22S***-WM02T◇◇EN	144	G3L32N***-MR15T◇◇TB◆	95	G3L40N***-MM04T◇◇TB◆	98
G3L22S***-WM02T◇◇EV◆	144	G3L32N***-MR15T◇◇TN	95	G3L40N***-MM04T◇◇TN	98
G3L22S***-WM04T◇◇EN	144	G3L32N***-MM01C◇JAB2	96	G3L40N***-WR08T◇◇EN	147
G3L22S***-WM04T◇◇EV◆	144	G3L32N***-MM01C◇JAN	96	G3L40N***-WR08T◇◇EV◆	147
G3L-28-***-010	192	G3L32N***-MM01T◇◇TB◆	95	G3L40N***-WR15T◇◇EN	147
G3L-28-***-020	192	G3L32N***-MM01T◇◇TN	95	G3L40N***-WR22T◇◇EN	147
G3L-28-***-040	192	G3L32N***-MM02C◇JAB2	96	G3L40N***-WM02T◇◇EN	147
G3L-28-***-075	192	G3L32N***-MM02C◇JAN	96	G3L40N***-WM02T◇◇EV◆	147
G3L28N***-ER08T◇JTN	166	G3L32N***-MM02T◇◇TB◆	95	G3L40N***-WM04T◇◇EN	147
G3L28N***-EM02T◇JTN	166	G3L32N***-MM02T◇◇TN	95	G3L40N***-WM04T◇◇EV◆	147
G3L28N***-EM04T◇JTN	166	G3L32N***-MM04C◇JAB2	96	G3L40S***-WR08T◇◇EN	147
G3L28N***-MR08T◇◇TB◆	92	G3L32N***-MM04C◇JAN	96	G3L40S***-WR08T◇◇EV◆	147
G3L28N***-MR08T◇◇TN	92	G3L32N***-MM04T◇◇TB◆	95	G3L40S***-WR15T◇◇EN	147
G3L28N***-MM01C◇JAB2	93	G3L32N***-MM04T◇◇TN	95	G3L40S***-WR22T◇◇EN	147
G3L28N***-MM01C◇JAN	93	G3L32N***-WR08T◇◇EN	146	G3L40S***-WM02T◇◇EN	147
G3L28N***-MM01T◇◇TB◆	92	G3L32N***-WR08T◇◇EV◆	146	G3L40S***-WM02T◇◇EV◆	147
G3L28N***-MM01T◇◇TN	92	G3L32N***-WR15T◇◇EN	146	G3L40S***-WM04T◇◇EN	147
G3L28N***-MM02C◇JAB2	93	G3L32N***-WM01T◇◇EN	146	G3L40S***-WM04T◇◇EV◆	147
G3L28N***-MM02C◇JAN	93	G3L32N***-WM01T◇◇EV◆	146	G3L-50-***-040	193
G3L28N***-MM02T◇◇TB◆	92	G3L32N***-WM02T◇◇EN	146	G3L-50-***-075	193
G3L28N***-MM02T◇◇TN	92	G3L32N***-WM02T◇◇EV◆	146	G3L-50-***-150	193
G3L28N***-MM04C◇JAB2	93	G3L32N***-WM04T◇◇EN	146	G3L-50-***-220	193
G3L28N***-MM04C◇JAN	93	G3L32N***-WM04T◇◇EV◆	146	G3L50N***-MR08T◇◇TB◆	100
G3L28N***-MM04T◇◇TB◆	92	G3L32S***-WR08T◇◇EN	146	G3L50N***-MR08T◇◇TN	100
G3L28N***-MM04T◇◇TN	92	G3L32S***-WR08T◇◇EV◆	146	G3L50N***-MR15T◇◇TB◆	100
G3L28N***-WR08T◇◇EN	145	G3L32S***-WR15T◇◇EN	146	G3L50N***-MR15T◇◇TN	100
G3L28N***-WR08T◇◇EV◆	145	G3L32S***-WM01T◇◇EN	146	G3L50N***-MR22T◇◇TB◆	100
G3L28N***-WM01T◇◇EN	145	G3L32S***-WM01T◇◇EV◆	146	G3L50N***-MR22T◇◇TN	100
G3L28N***-WM01T◇◇EV◆	145	G3L32S***-WM02T◇◇EN	146	G3L50N***-MM04C◇JAB2	101
G3L28N***-WM02T◇◇EN	145	G3L32S***-WM02T◇◇EV◆	146	G3L50N***-MM04C◇JAN	101
G3L28N***-WM02T◇◇EV◆	145	G3L32S***-WM04T◇◇EN	146	G3L50N***-MM04T◇◇TB◆	100
G3L28N***-WM04T◇◇EN	145	G3L32S***-WM04T◇◇EV◆	146	G3L50N***-MM04T◇◇TN	100
G3L28N***-WM04T◇◇EV◆	145	G3L-40-***-020	193	G3L50N***-WR08T◇◇EN	148
G3L28S***-WR08T◇◇EN	145	G3L-40-***-040	193	G3L50N***-WR08T◇◇EV◆	148
G3L28S***-WR08T◇◇EV◆	145	G3L-40-***-075	193	G3L50N***-WR15T◇◇EN	148

* A reduction ratio will be indicated as *** in the nomenclature. In addition, a supply voltage code will be indicated as ◇, a supply voltage/certification code will be indicated as ◇◇, and a brake specification will be indicated as ◆.

G3L50N∗∗∗-WR22T◇◇EN	148	GAL50S∗∗∗-WR15T◇◇EN	149	GFM-40-∗∗∗-T90	118
G3L50N∗∗∗-WM04T◇◇EN	148	GAL50S∗∗∗-WR22T◇◇EN	149	GFMN-12-∗∗∗-S15	104
G3L50N∗∗∗-WM04T◇◇EV◆	148	GALS-50-∗∗∗-040	208	GFMN-12-∗∗∗-S25	104
G3L50S∗∗∗-WR08T◇◇EN	148	GALS-50-∗∗∗-075	208	GFMN-12-∗∗∗-S40	104
G3L50S∗∗∗-WR08T◇◇EV◆	148	GALS-50-∗∗∗-150	208	GFMN-12-∗∗∗-T15	104
G3L50S∗∗∗-WR15T◇◇EN	148	GALS-50-∗∗∗-220	208	GFMN-12-∗∗∗-T25	104
G3L50S∗∗∗-WR22T◇◇EN	148	GFM-12-∗∗∗-S15	104	GFMN-12-∗∗∗-T40	104
G3L50S∗∗∗-WM04T◇◇EN	148	GFM-12-∗∗∗-S25	104	GFMN-12-∗∗∗-T60	104
G3L50S∗∗∗-WM04T◇◇EV◆	148	GFM-12-∗∗∗-S40	104	GFMN-15-∗∗∗-S25	105
G3LS-18-∗∗∗-010	203	GFM-12-∗∗∗-T15	104	GFMN-15-∗∗∗-S40	105
G3LS-18-∗∗∗-020	203	GFM-12-∗∗∗-T25	104	GFMN-15-∗∗∗-S60	105
G3LS-22-∗∗∗-010	203	GFM-12-∗∗∗-T40	104	GFMN-15-∗∗∗-S90	105
G3LS-22-∗∗∗-020	203	GFM-12-∗∗∗-T60	104	GFMN-15-∗∗∗-T25	105
G3LS-22-∗∗∗-040	203	GFM-15-∗∗∗-S25	105	GFMN-15-∗∗∗-T40	105
G3LS-28-∗∗∗-010	204	GFM-15-∗∗∗-S40	105	GFMN-15-∗∗∗-T60	105
G3LS-28-∗∗∗-020	204	GFM-15-∗∗∗-S60	105	GFMN-15-∗∗∗-T90	105
G3LS-28-∗∗∗-040	204	GFM-15-∗∗∗-S90	105	GFMN-18-∗∗∗-S40	106
G3LS-28-∗∗∗-075	204	GFM-15-∗∗∗-T25	105	GFMN-18-∗∗∗-S60	106
G3LS-32-∗∗∗-010	205	GFM-15-∗∗∗-T40	105	GFMN-18-∗∗∗-S90	106
G3LS-32-∗∗∗-020	205	GFM-15-∗∗∗-T60	105	GFMN-18-∗∗∗-T40	106
G3LS-32-∗∗∗-040	205	GFM-15-∗∗∗-T90	105	GFMN-18-∗∗∗-T60	106
G3LS-32-∗∗∗-075	205	GFM-18-∗∗∗-S40	106	GFMN-18-∗∗∗-T90	106
G3LS-32-∗∗∗-150	205	GFM-18-∗∗∗-S60	106	GFMN-22-∗∗∗-S15	109
G3LS-40-∗∗∗-020	206	GFM-18-∗∗∗-S90	106	GFMN-22-∗∗∗-S25	109
G3LS-40-∗∗∗-040	206	GFM-18-∗∗∗-T40	106	GFMN-22-∗∗∗-S40	109
G3LS-40-∗∗∗-075	206	GFM-18-∗∗∗-T60	106	GFMN-22-∗∗∗-S60	109
G3LS-40-∗∗∗-150	206	GFM-18-∗∗∗-T90	106	GFMN-22-∗∗∗-T15	109
G3LS-40-∗∗∗-220	206	GFM-22-∗∗∗-S15	109	GFMN-22-∗∗∗-T25	109
G3LS-50-∗∗∗-040	207	GFM-22-∗∗∗-S25	109	GFMN-22-∗∗∗-T40	109
G3LS-50-∗∗∗-075	207	GFM-22-∗∗∗-S40	109	GFMN-22-∗∗∗-T60	109
G3LS-50-∗∗∗-150	207	GFM-22-∗∗∗-S60	109	GFMN-28-∗∗∗-S25	112
G3LS-50-∗∗∗-220	207	GFM-22-∗∗∗-T15	109	GFMN-28-∗∗∗-S40	112
GAL-50-∗∗∗-040	194	GFM-22-∗∗∗-T25	109	GFMN-28-∗∗∗-S60	112
GAL-50-∗∗∗-075	194	GFM-22-∗∗∗-T40	109	GFMN-28-∗∗∗-S90	112
GAL-50-∗∗∗-150	194	GFM-22-∗∗∗-T60	109	GFMN-28-∗∗∗-T25	112
GAL-50-∗∗∗-220	194	GFM-28-∗∗∗-S25	112	GFMN-28-∗∗∗-T40	112
GAL50N∗∗∗-MM04C◇JAB2	103	GFM-28-∗∗∗-S40	112	GFMN-28-∗∗∗-T60	112
GAL50N∗∗∗-MM04C◇JAN	103	GFM-28-∗∗∗-S60	112	GFMN-28-∗∗∗-T90	112
GAL50N∗∗∗-MM04T◇◇TB◆	102	GFM-28-∗∗∗-S90	112	GFMN-32-∗∗∗-S40	115
GAL50N∗∗∗-MM04T◇◇TN	102	GFM-28-∗∗∗-T25	112	GFMN-32-∗∗∗-S60	115
GAL50N∗∗∗-MR08T◇◇TB◆	102	GFM-28-∗∗∗-T40	112	GFMN-32-∗∗∗-S90	115
GAL50N∗∗∗-MR08T◇◇TN	102	GFM-28-∗∗∗-T60	112	GFMN-32-∗∗∗-T40	115
GAL50N∗∗∗-MR15T◇◇TB◆	102	GFM-28-∗∗∗-T90	112	GFMN-32-∗∗∗-T60	115
GAL50N∗∗∗-MR15T◇◇TN	102	GFM-32-∗∗∗-S40	115	GFMN-32-∗∗∗-T90	115
GAL50N∗∗∗-MR22T◇◇TB◆	102	GFM-32-∗∗∗-S60	115	GFMN-40-∗∗∗-S90	118
GAL50N∗∗∗-MR22T◇◇TN	102	GFM-32-∗∗∗-S90	115	GFMN-40-∗∗∗-T90	118
GAL50S∗∗∗-WM04T◇◇EN	149	GFM-32-∗∗∗-T40	115	GFP-12-∗∗∗-S15	182
GAL50S∗∗∗-WM04T◇◇EV◆	149	GFM-32-∗∗∗-T60	115	GFP-12-∗∗∗-S25	182
GAL50S∗∗∗-WR08T◇◇EN	149	GFM-32-∗∗∗-T90	115	GFP-15-∗∗∗-S25	182
GAL50S∗∗∗-WR08T◇◇EV◆	149	GFM-40-∗∗∗-S90	118	GFP-15-∗∗∗-S40	182

* A reduction ratio will be indicated as ∗∗∗ in the nomenclature.

GFP-15-***-S60	182	GFW-12-***-S25	150	GKMN-28-***-T60	127
GFP-15-***-S90	182	GFW-12-***-T15	150	GKMN-28-***-T90	127
GFP-18-***-S40	183	GFW-12-***-T25	150	GKMN-32-***-S40	130
GFP-18-***-S60	183	GFW-12-***-T40	150	GKMN-32-***-S60	130
GFP-18-***-S90	183	GFW-15-***-S25	150	GKMN-32-***-S90	130
GFP-22-***-S15	183	GFW-15-***-S40	150	GKMN-32-***-T40	130
GFP-22-***-S25	183	GFW-15-***-T25	150	GKMN-32-***-T60	130
GFP-28-***-S25	184	GFW-15-***-T40	150	GKMN-32-***-T90	130
GFP-28-***-S40	184	GFW-15-***-T60	150	GKP-22-***-S15	185
GFP-28-***-S60	184	GFW-18-***-S40	151	GKP-22-***-S25	185
GFP-28-***-S90	184	GFW-18-***-S60	151	GKP-28-***-S25	186
GFP-32-***-S40	184	GFW-18-***-T40	151	GKP-28-***-S40	186
GFP-32-***-S60	184	GFW-18-***-T60	151	GKP-28-***-S60	186
GFP-32-***-S90	184	GFW-18-***-T90	151	GKP-28-***-S90	186
GFP-40-***-S90	185	GKM-22-***-S15	124	GKP-32-***-S40	186
GFU-12-***-S15	182	GKM-22-***-S25	124	GKP-32-***-S60	186
GFU-12-***-S25	182	GKM-22-***-S40	124	GKP-32-***-S90	186
GFU-15-***-S25	182	GKM-22-***-S60	124	GKU-22-***-S15	185
GFU-15-***-S40	182	GKM-22-***-T15	124	GKU-22-***-S25	185
GFU-15-***-S60	182	GKM-22-***-T25	124	GKU-28-***-S25	186
GFU-15-***-S90	182	GKM-22-***-T40	124	GKU-28-***-S40	186
GFU-18-***-S40	183	GKM-22-***-T60	124	GKU-28-***-S60	186
GFU-18-***-S60	183	GKM-28-***-S25	127	GKU-28-***-S90	186
GFU-18-***-S90	183	GKM-28-***-S40	127	GKU-32-***-S40	186
GFU-22-***-S15	183	GKM-28-***-S60	127	GKU-32-***-S60	186
GFU-22-***-S25	183	GKM-28-***-S90	127	GKU-32-***-S90	186
GFU-28-***-S25	184	GKM-28-***-T25	127	GLM-12-***-S15	83
GFU-28-***-S40	184	GKM-28-***-T40	127	GLM-12-***-S25	83
GFU-28-***-S60	184	GKM-28-***-T60	127	GLM-12-***-S40	83
GFU-28-***-S90	184	GKM-28-***-T90	127	GLM-12-***-T15	83
GFU-32-***-S40	184	GKM-32-***-S40	130	GLM-12-***-T25	83
GFU-32-***-S60	184	GKM-32-***-S60	130	GLM-12-***-T40	83
GFU-32-***-S90	184	GKM-32-***-S90	130	GLM-12-***-T60	83
GFU-40-***-S90	185	GKM-32-***-T40	130	GLM-15-***-S25	84
GFV-12-***-S15	150	GKM-32-***-T60	130	GLM-15-***-S40	84
GFV-12-***-S25	150	GKM-32-***-T90	130	GLM-15-***-S60	84
GFV-12-***-T15	150	GKMN-22-***-S15	124	GLM-15-***-S90	84
GFV-12-***-T25	150	GKMN-22-***-S25	124	GLM-15-***-T25	84
GFV-12-***-T40	150	GKMN-22-***-S40	124	GLM-15-***-T40	84
GFV-15-***-S25	150	GKMN-22-***-S60	124	GLM-15-***-T60	84
GFV-15-***-S40	150	GKMN-22-***-T15	124	GLM-15-***-T90	84
GFV-15-***-T25	150	GKMN-22-***-T25	124	GLM-18-***-S40	85
GFV-15-***-T40	150	GKMN-22-***-T40	124	GLM-18-***-S60	85
GFV-15-***-T60	150	GKMN-22-***-T60	124	GLM-18-***-S90	85
GFV-18-***-S40	151	GKMN-28-***-S25	127	GLM-18-***-T40	85
GFV-18-***-S60	151	GKMN-28-***-S40	127	GLM-18-***-T60	85
GFV-18-***-T40	151	GKMN-28-***-S60	127	GLM-18-***-T90	85
GFV-18-***-T60	151	GKMN-28-***-S90	127	GLM-22-***-S15	88
GFV-18-***-T90	151	GKMN-28-***-T25	127	GLM-22-***-S25	88
GFW-12-***-S15	150	GKMN-28-***-T40	127	GLM-22-***-S40	88

* A reduction ratio will be indicated as *** in the nomenclature.

GLM-22-***-S60	88	GLMN-28-***-S25	91	GLU-32-***-S40	181
GLM-22-***-T15	88	GLMN-28-***-S40	91	GLU-32-***-S60	181
GLM-22-***-T25	88	GLMN-28-***-S60	91	GLU-32-***-S90	181
GLM-22-***-T40	88	GLMN-28-***-S90	91	GLU-40-***-S90	181
GLM-22-***-T60	88	GLMN-28-***-T25	91	GLV-12-***-S15	142
GLM-28-***-S25	91	GLMN-28-***-T40	91	GLV-12-***-S25	142
GLM-28-***-S40	91	GLMN-28-***-T60	91	GLV-12-***-T15	142
GLM-28-***-S60	91	GLMN-28-***-T90	91	GLV-12-***-T25	142
GLM-28-***-S90	91	GLMN-32-***-S40	94	GLV-12-***-T40	142
GLM-28-***-T25	91	GLMN-32-***-S60	94	GLV-15-***-S25	142
GLM-28-***-T40	91	GLMN-32-***-S90	94	GLV-15-***-S40	142
GLM-28-***-T60	91	GLMN-32-***-T40	94	GLV-15-***-T25	142
GLM-28-***-T90	91	GLMN-32-***-T60	94	GLV-15-***-T40	142
GLM-32-***-S40	94	GLMN-32-***-T90	94	GLV-15-***-T60	142
GLM-32-***-S60	94	GLMN-40-***-S90	97	GLV-18-***-S40	143
GLM-32-***-S90	94	GLMN-40-***-T90	97	GLV-18-***-S60	143
GLM-32-***-T40	94	GLP-12-***-S15	177	GLV-18-***-T40	143
GLM-32-***-T60	94	GLP-12-***-S25	177	GLV-18-***-T60	143
GLM-32-***-T90	94	GLP-15-***-S25	178	GLV-18-***-T90	143
GLM-40-***-S90	97	GLP-15-***-S40	178	GLW-12-***-S15	142
GLM-40-***-T90	97	GLP-15-***-S60	178	GLW-12-***-S25	142
GLMN-12-***-S15	83	GLP-15-***-S90	178	GLW-12-***-T15	142
GLMN-12-***-S25	83	GLP-18-***-S40	179	GLW-12-***-T25	142
GLMN-12-***-S40	83	GLP-18-***-S60	179	GLW-12-***-T40	142
GLMN-12-***-T15	83	GLP-18-***-S90	179	GLW-15-***-S25	142
GLMN-12-***-T25	83	GLP-22-***-S15	180	GLW-15-***-S40	142
GLMN-12-***-T40	83	GLP-22-***-S25	180	GLW-15-***-T25	142
GLMN-12-***-T60	83	GLP-28-***-S25	180	GLW-15-***-T40	142
GLMN-15-***-S25	84	GLP-28-***-S40	180	GLW-15-***-T60	142
GLMN-15-***-S40	84	GLP-28-***-S60	180	GLW-18-***-S40	143
GLMN-15-***-S60	84	GLP-28-***-S90	180	GLW-18-***-S60	143
GLMN-15-***-S90	84	GLP-32-***-S40	181	GLW-18-***-T40	143
GLMN-15-***-T25	84	GLP-32-***-S60	181	GLW-18-***-T60	143
GLMN-15-***-T40	84	GLP-32-***-S90	181	GLW-18-***-T90	143
GLMN-15-***-T60	84	GLP-40-***-S90	181	H2F-22#-***-020	320
GLMN-15-***-T90	84	GLU-12-***-S15	177	H2F22#***-EM02T◇JTN	298
GLMN-18-***-S40	85	GLU-12-***-S25	177	H2F22#***-MM01S◇JAB2	274
GLMN-18-***-S60	85	GLU-15-***-S25	178	H2F22#***-MM01S◇JAN	274
GLMN-18-***-S90	85	GLU-15-***-S40	178	H2F22#***-MM01T◇◇TB◆	273
GLMN-18-***-T40	85	GLU-15-***-S60	178	H2F22#***-MM01T◇◇TN	273
GLMN-18-***-T60	85	GLU-15-***-S90	178	H2F22#***-MM02C◇JAB2	274
GLMN-18-***-T90	85	GLU-18-***-S40	179	H2F22#***-MM02C◇JAN	274
GLMN-22-***-S15	88	GLU-18-***-S60	179	H2F22#***-MM02T◇◇TB◆	273
GLMN-22-***-S25	88	GLU-18-***-S90	179	H2F22#***-MM02T◇◇TN	273
GLMN-22-***-S40	88	GLU-22-***-S15	180	H2F22#***-WM01T◇◇EN	292
GLMN-22-***-S60	88	GLU-22-***-S25	180	H2F22#***-WM01T◇◇EV◆	292
GLMN-22-***-T15	88	GLU-28-***-S25	180	H2F22#***-WM02T◇◇EN	292
GLMN-22-***-T25	88	GLU-28-***-S40	180	H2F22#***-WM02T◇◇EV◆	292
GLMN-22-***-T40	88	GLU-28-***-S60	180	H2FS-22#-***-020	329
GLMN-22-***-T60	88	GLU-28-***-S90	180	H2L-22#-***-020	317

* A shaft arrangement will be indicated as # and a reduction ratio will be indicated as *** in the nomenclature. In addition, a supply voltage code will be indicated as ◇, a supply voltage/certification code will be indicated as ◇◇, and a brake specification will be indicated as ◆.

H2L22#∗∗∗-EM02T◇JTN	296	H2L32#∗∗∗-WR08T◇◇EN	287	H2L50#∗∗∗-WM04T◇◇EN	289
H2L22#∗∗∗-MM01S◇JAB2	258	H2L32#∗∗∗-WR08T◇◇EV◆	287	H2L50#∗∗∗-WM04T◇◇EV◆	289
H2L22#∗∗∗-MM01S◇JAN	258	H2L32#∗∗∗-WM01T◇◇EN	287	H2LS-22#-∗∗∗-020	325
H2L22#∗∗∗-MM01T◇◇TB◆	257	H2L32#∗∗∗-WM01T◇◇EV◆	287	H2LS-28#-∗∗∗-020	325
H2L22#∗∗∗-MM01T◇◇TN	257	H2L32#∗∗∗-WM02T◇◇EN	287	H2LS-28#-∗∗∗-040	325
H2L22#∗∗∗-MM02C◇JAB2	258	H2L32#∗∗∗-WM02T◇◇EV◆	287	H2LS-32#-∗∗∗-020	326
H2L22#∗∗∗-MM02C◇JAN	258	H2L32#∗∗∗-WM04T◇◇EN	287	H2LS-32#-∗∗∗-040	326
H2L22#∗∗∗-MM02T◇◇TB◆	257	H2L32#∗∗∗-WM04T◇◇EV◆	287	H2LS-32#-∗∗∗-075	326
H2L22#∗∗∗-MM02T◇◇TN	257	H2L-40#-∗∗∗-020	319	H2LS-40#-∗∗∗-020	327
H2L22#∗∗∗-WM01T◇◇EN	285	H2L-40#-∗∗∗-040	319	H2LS-40#-∗∗∗-040	327
H2L22#∗∗∗-WM01T◇◇EV◆	285	H2L-40#-∗∗∗-075	319	H2LS-40#-∗∗∗-075	327
H2L22#∗∗∗-WM02T◇◇EN	285	H2L-40#-∗∗∗-150	319	H2LS-40#-∗∗∗-150	327
H2L22#∗∗∗-WM02T◇◇EV◆	285	H2L40#∗∗∗-ER08T◇JTN	297	H2LS-50#-∗∗∗-040	328
H2L-28#-∗∗∗-020	317	H2L40#∗∗∗-MR08T◇◇TB◆	266	H2LS-50#-∗∗∗-075	328
H2L-28#-∗∗∗-040	317	H2L40#∗∗∗-MR08T◇◇TN	266	H2LS-50#-∗∗∗-150	328
H2L28#∗∗∗-EM02T◇JTN	296	H2L40#∗∗∗-MR15T◇◇TB◆	266	H2LS-50#-∗∗∗-220	328
H2L28#∗∗∗-EM04T◇JTN	296	H2L40#∗∗∗-MR15T◇◇TN	266	HFM-15#-∗∗∗-S15	270
H2L28#∗∗∗-MM01T◇◇TB◆	260	H2L40#∗∗∗-MM02C◇JAB2	267	HFM-15#-∗∗∗-S25	270
H2L28#∗∗∗-MM01T◇◇TN	260	H2L40#∗∗∗-MM02C◇JAN	267	HFM-15#-∗∗∗-S40	270
H2L28#∗∗∗-MM02C◇JAB2	261	H2L40#∗∗∗-MM02T◇◇TB◆	266	HFM-15#-∗∗∗-T15	270
H2L28#∗∗∗-MM02C◇JAN	261	H2L40#∗∗∗-MM02T◇◇TN	266	HFM-15#-∗∗∗-T25	270
H2L28#∗∗∗-MM02T◇◇TB◆	260	H2L40#∗∗∗-MM04C◇JAB2	267	HFM-15#-∗∗∗-T40	270
H2L28#∗∗∗-MM02T◇◇TN	260	H2L40#∗∗∗-MM04C◇JAN	267	HFM-15#-∗∗∗-T60	270
H2L28#∗∗∗-MM04C◇JAB2	261	H2L40#∗∗∗-MM04T◇◇TB◆	266	HFM-18#-∗∗∗-S40	271
H2L28#∗∗∗-MM04C◇JAN	261	H2L40#∗∗∗-MM04T◇◇TN	266	HFM-18#-∗∗∗-S60	271
H2L28#∗∗∗-MM04T◇◇TB◆	260	H2L40#∗∗∗-WR08T◇◇EN	288	HFM-18#-∗∗∗-S90	271
H2L28#∗∗∗-MM04T◇◇TN	260	H2L40#∗∗∗-WR08T◇◇EV◆	288	HFM-18#-∗∗∗-T40	271
H2L28#∗∗∗-WM01T◇◇EN	286	H2L40#∗∗∗-WR15T◇◇EN	288	HFM-18#-∗∗∗-T60	271
H2L28#∗∗∗-WM01T◇◇EV◆	286	H2L40#∗∗∗-WM02T◇◇EN	288	HFM-18#-∗∗∗-T90	271
H2L28#∗∗∗-WM02T◇◇EN	286	H2L40#∗∗∗-WM02T◇◇EV◆	288	HFM-22#-∗∗∗-S15	272
H2L28#∗∗∗-WM02T◇◇EV◆	286	H2L40#∗∗∗-WM04T◇◇EN	288	HFM-22#-∗∗∗-S25	272
H2L28#∗∗∗-WM04T◇◇EN	286	H2L40#∗∗∗-WM04T◇◇EV◆	288	HFM-22#-∗∗∗-S40	272
H2L28#∗∗∗-WM04T◇◇EV◆	286	H2L-50#-∗∗∗-040	320	HFM-22#-∗∗∗-S60	272
H2L-32#-∗∗∗-020	318	H2L-50#-∗∗∗-075	320	HFM-22#-∗∗∗-T15	272
H2L-32#-∗∗∗-040	318	H2L-50#-∗∗∗-150	320	HFM-22#-∗∗∗-T25	272
H2L-32#-∗∗∗-075	318	H2L-50#-∗∗∗-220	320	HFM-22#-∗∗∗-T40	272
H2L32#∗∗∗-ER08T◇JTN	297	H2L50#∗∗∗-MR08T◇◇TB◆	268	HFM-22#-∗∗∗-T60	272
H2L32#∗∗∗-EM04T◇JTN	297	H2L50#∗∗∗-MR08T◇◇TN	268	HFMN-15#-∗∗∗-S15	270
H2L32#∗∗∗-MR08T◇◇TB◆	263	H2L50#∗∗∗-MR15T◇◇TB◆	268	HFMN-15#-∗∗∗-S25	270
H2L32#∗∗∗-MR08T◇◇TN	263	H2L50#∗∗∗-MR15T◇◇TN	268	HFMN-15#-∗∗∗-S40	270
H2L32#∗∗∗-MM01T◇◇TB◆	263	H2L50#∗∗∗-MR22T◇◇TB◆	268	HFMN-15#-∗∗∗-T15	270
H2L32#∗∗∗-MM01T◇◇TN	263	H2L50#∗∗∗-MR22T◇◇TN	268	HFMN-15#-∗∗∗-T25	270
H2L32#∗∗∗-MM02C◇JAB2	264	H2L50#∗∗∗-MM04C◇JAB2	269	HFMN-15#-∗∗∗-T40	270
H2L32#∗∗∗-MM02C◇JAN	264	H2L50#∗∗∗-MM04C◇JAN	269	HFMN-15#-∗∗∗-T60	270
H2L32#∗∗∗-MM02T◇◇TB◆	263	H2L50#∗∗∗-MM04T◇◇TB◆	268	HFMN-18#-∗∗∗-S40	271
H2L32#∗∗∗-MM02T◇◇TN	263	H2L50#∗∗∗-MM04T◇◇TN	268	HFMN-18#-∗∗∗-S60	271
H2L32#∗∗∗-MM04C◇JAB2	264	H2L50#∗∗∗-WR08T◇◇EN	289	HFMN-18#-∗∗∗-S90	271
H2L32#∗∗∗-MM04C◇JAN	264	H2L50#∗∗∗-WR08T◇◇EV◆	289	HFMN-18#-∗∗∗-T40	271
H2L32#∗∗∗-MM04T◇◇TB◆	263	H2L50#∗∗∗-WR15T◇◇EN	289	HFMN-18#-∗∗∗-T60	271
H2L32#∗∗∗-MM04T◇◇TN	263	H2L50#∗∗∗-WR22T◇◇EN	289	HFMN-18#-∗∗∗-T90	271

* A shaft arrangement will be indicated as # and a reduction ratio will be indicated as ∗∗∗ in the nomenclature. In addition, a supply voltage code will be indicated as ◇, a supply voltage/certification code will be indicated as ◇◇, and a brake specification will be indicated as ◆.

HFMN-22#-***-S15	272	HLM-18#-***-T40	255	HLMN-28#-***-S60	259
HFMN-22#-***-S25	272	HLM-18#-***-T60	255	HLMN-28#-***-S90	259
HFMN-22#-***-S40	272	HLM-18#-***-T90	255	HLMN-28#-***-T25	259
HFMN-22#-***-S60	272	HLM-22#-***-S15	256	HLMN-28#-***-T40	259
HFMN-22#-***-T15	272	HLM-22#-***-S25	256	HLMN-28#-***-T60	259
HFMN-22#-***-T25	272	HLM-22#-***-S40	256	HLMN-28#-***-T90	259
HFMN-22#-***-T40	272	HLM-22#-***-S60	256	HLMN-32#-***-S40	262
HFMN-22#-***-T60	272	HLM-22#-***-T15	256	HLMN-32#-***-S60	262
HFP-15#-***-S15	310	HLM-22#-***-T25	256	HLMN-32#-***-S90	262
HFP-15#-***-S25	310	HLM-22#-***-T40	256	HLMN-32#-***-T40	262
HFP-18#-***-S40	311	HLM-22#-***-T60	256	HLMN-32#-***-T60	262
HFP-18#-***-S60	311	HLM-28#-***-S25	259	HLMN-32#-***-T90	262
HFP-18#-***-S90	311	HLM-28#-***-S40	259	HLMN-40#-***-S90	265
HFP-22#-***-S15	312	HLM-28#-***-S60	259	HLMN-40#-***-T90	265
HFP-22#-***-S25	312	HLM-28#-***-S90	259	HLP-15#-***-S15	305
HFU-15#-***-S15	310	HLM-28#-***-T25	259	HLP-15#-***-S25	305
HFU-15#-***-S25	310	HLM-28#-***-T40	259	HLP-18#-***-S40	306
HFU-18#-***-S40	311	HLM-28#-***-T60	259	HLP-18#-***-S60	306
HFU-18#-***-S60	311	HLM-28#-***-T90	259	HLP-18#-***-S90	306
HFU-18#-***-S90	311	HLM-32#-***-S40	262	HLP-22#-***-S15	307
HFU-22#-***-S15	312	HLM-32#-***-S60	262	HLP-22#-***-S25	307
HFU-22#-***-S25	312	HLM-32#-***-S90	262	HLP-28#-***-S25	308
HFV-15#-***-S15	290	HLM-32#-***-T40	262	HLP-28#-***-S40	308
HFV-15#-***-S25	290	HLM-32#-***-T60	262	HLP-28#-***-S60	308
HFV-15#-***-T15	290	HLM-32#-***-T90	262	HLP-28#-***-S90	308
HFV-15#-***-T25	290	HLM-40#-***-S90	265	HLP-32#-***-S40	309
HFV-15#-***-T40	290	HLM-40#-***-T90	265	HLP-32#-***-S60	309
HFV-18#-***-S40	291	HLMN-15#-***-S15	254	HLP-32#-***-S90	309
HFV-18#-***-T40	291	HLMN-15#-***-S25	254	HLP-40#-***-S90	310
HFV-18#-***-T60	291	HLMN-15#-***-S40	254	HLU-15#-***-S15	305
HFV-18#-***-T90	291	HLMN-15#-***-T15	254	HLU-15#-***-S25	305
HFW-15#-***-S15	290	HLMN-15#-***-T25	254	HLU-18#-***-S40	306
HFW-15#-***-S25	290	HLMN-15#-***-T40	254	HLU-18#-***-S60	306
HFW-15#-***-T15	290	HLMN-15#-***-T60	254	HLU-18#-***-S90	306
HFW-15#-***-T25	290	HLMN-18#-***-S40	255	HLU-22#-***-S15	307
HFW-15#-***-T40	290	HLMN-18#-***-S60	255	HLU-22#-***-S25	307
HFW-18#-***-S40	291	HLMN-18#-***-S90	255	HLU-28#-***-S25	308
HFW-18#-***-T40	291	HLMN-18#-***-T40	255	HLU-28#-***-S40	308
HFW-18#-***-T60	291	HLMN-18#-***-T60	255	HLU-28#-***-S60	308
HFW-18#-***-T90	291	HLMN-18#-***-T90	255	HLU-28#-***-S90	308
HLM-15#-***-S15	254	HLMN-22#-***-S15	256	HLU-32#-***-S40	309
HLM-15#-***-S25	254	HLMN-22#-***-S25	256	HLU-32#-***-S60	309
HLM-15#-***-S40	254	HLMN-22#-***-S40	256	HLU-32#-***-S90	309
HLM-15#-***-T15	254	HLMN-22#-***-S60	256	HLU-40#-***-S90	310
HLM-15#-***-T25	254	HLMN-22#-***-T15	256	HLV-15#-***-S15	283
HLM-15#-***-T40	254	HLMN-22#-***-T25	256	HLV-15#-***-S25	283
HLM-15#-***-T60	254	HLMN-22#-***-T40	256	HLV-15#-***-T15	283
HLM-18#-***-S40	255	HLMN-22#-***-T60	256	HLV-15#-***-T25	283
HLM-18#-***-S60	255	HLMN-28#-***-S25	259	HLV-15#-***-T40	283
HLM-18#-***-S90	255	HLMN-28#-***-S40	259	HLV-18#-***-S40	284

* A shaft arrangement will be indicated as # and a reduction ratio will be indicated as *** in the nomenclature.

HLV-18#-***-T40	284	VF3SC15-***N100L4A	691	VGKD18-***N200L4A	670
HLV-18#-***-T60	284	VF3SC25-***N200L2A	691	VGKD22-***N100L1A	670
HLV-18#-***-T90	284	VF3SC25-***N200L4A	691	VGKD22-***N100L2A	670
HLW-15#-***-S15	283	VF3SC30-***N200L2A	692	VGKD22-***N100L4A	670
HLW-15#-***-S25	283	VF3SC30-***N200L4A	692	VGKD22-***N200L2A	670
HLW-15#-***-T15	283	VF3SC30-***N400L2A	692	VGKD22-***N200L4A	670
HLW-15#-***-T25	283	VF3SC30-***N400L4A	692	VGKD22-***N400L2A	670
HLW-15#-***-T40	283	VF3SC35-***N400L2A	693	VGKD22-***N400L4A	670
HLW-18#-***-S40	284	VF3SC35-***N400L4A	693	VGKD28-***N200L2A	671
HLW-18#-***-T40	284	VF3SD15-***N100L1A	691	VGKD28-***N200L4A	671
HLW-18#-***-T60	284	VF3SD15-***N100L2A	691	VGKD28-***N400L2A	671
HLW-18#-***-T90	284	VF3SD15-***N100L4A	691	VGKD28-***N400L4A	671
Battery powered Gearmotors		VF3SD25-***N200L2A	691	VGKD32-***N400L2A	671
Part Number	Corresponding Page	VF3SD25-***N200L4A	691	VGKD32-***N400L4A	671
APG22N***-SDM080L4AB	672	VF3SD30-***N200L2A	692	VGLC12-***N50L1A	666
APG22N***-SDM080L4AN	672	VF3SD30-***N200L4A	692	VGLC12-***N50L2A	666
APG22N***-SDW080L4AB	672	VF3SD30-***N400L2A	692	VGLC15-***N100L1A	666
APG22N***-SDW080L4AN	672	VF3SD30-***N400L4A	692	VGLC15-***N100L2A	666
APG28N***-SDM080L4AB	673	VF3SD35-***N400L2A	693	VGLC15-***N100L4A	666
APG28N***-SDM080L4AN	673	VF3SD35-***N400L4A	693	VGLC15-***N50L1A	666
APG28N***-SDW080L4AB	673	VGKC12-***N50L1A	669	VGLC15-***N50L2A	666
APG28N***-SDW080L4AN	673	VGKC12-***N50L2A	669	VGLC18-***N200L2A	667
F3S30N***-SDM080L4AB	698	VGKC15-***N100L1A	669	VGLC18-***N200L4A	667
F3S30N***-SDM080L4AN	698	VGKC15-***N100L2A	669	VGLC22-***N100L1A	667
F3S30S***-SDW080L4AB	698	VGKC15-***N100L4A	669	VGLC22-***N100L2A	667
F3S30S***-SDW080L4AN	698	VGKC15-***N50L1A	669	VGLC22-***N100L4A	667
VF3FC18#-***N100L1A	694	VGKC15-***N50L2A	669	VGLC22-***N200L2A	667
VF3FC18#-***N100L2A	694	VGKC18-***N200L2A	670	VGLC22-***N200L4A	667
VF3FC18#-***N100L4A	694	VGKC18-***N200L4A	670	VGLC22-***N400L2A	667
VF3FC22#-***N200L2A	695	VGKC22-***N100L1A	670	VGLC22-***N400L4A	667
VF3FC22#-***N200L4A	695	VGKC22-***N100L2A	670	VGLC28-***N200L2A	668
VF3FC28#-***N200L2A	696	VGKC22-***N100L4A	670	VGLC28-***N200L4A	668
VF3FC28#-***N200L4A	696	VGKC22-***N200L2A	670	VGLC28-***N400L2A	668
VF3FC28#-***N400L2A	696	VGKC22-***N200L4A	670	VGLC28-***N400L4A	668
VF3FC28#-***N400L4A	696	VGKC22-***N400L2A	670	VGLC32-***N400L2A	668
VF3FC32#-***N400L2A	697	VGKC22-***N400L4A	670	VGLC32-***N400L4A	668
VF3FC32#-***N400L4A	697	VGKC28-***N200L2A	671	VGLD12-***N50L1A	666
VF3FD18#-***N100L1A	694	VGKC28-***N200L4A	671	VGLD12-***N50L2A	666
VF3FD18#-***N100L2A	694	VGKC28-***N400L2A	671	VGLD15-***N100L1A	666
VF3FD18#-***N100L4A	694	VGKC28-***N400L4A	671	VGLD15-***N100L2A	666
VF3FD22#-***N200L2A	695	VGKC32-***N400L2A	671	VGLD15-***N100L4A	666
VF3FD22#-***N200L4A	695	VGKC32-***N400L4A	671	VGLD15-***N50L1A	666
VF3FD28#-***N200L2A	696	VGKD12-***N50L1A	669	VGLD15-***N50L2A	666
VF3FD28#-***N200L4A	696	VGKD12-***N50L2A	669	VGLD18-***N200L2A	667
VF3FD28#-***N400L2A	696	VGKD15-***N100L1A	669	VGLD18-***N200L4A	667
VF3FD28#-***N400L4A	696	VGKD15-***N100L2A	669	VGLD22-***N100L1A	667
VF3FD32#-***N400L2A	697	VGKD15-***N100L4A	669	VGLD22-***N100L2A	667
VF3FD32#-***N400L4A	697	VGKD15-***N50L1A	669	VGLD22-***N100L4A	667
VF3SC15-***N100L1A	691	VGKD15-***N50L2A	669	VGLD22-***N200L2A	667
VF3SC15-***N100L2A	691	VGKD18-***N200L2A	670	VGLD22-***N200L4A	667

* A shaft arrangement will be indicated as # and a reduction ratio will be indicated as *** in the nomenclature. In addition, a backlash will be indicated as □, and a flange type will be indicated as △.

VGLD22-***N400L2A	667
VGLD22-***N400L4A	667
VGLD28-***N200L2A	668
VGLD28-***N200L4A	668
VGLD28-***N400L2A	668
VGLD28-***N400L4A	668
VGLD32-***N400L2A	668
VGLD32-***N400L4A	668
VHLC18#-***N100L1A	679
VHLC18#-***N100L2A	679
VHLC18#-***N100L4A	679
VHLC22#-***N100L1A	680
VHLC22#-***N100L2A	680
VHLC22#-***N100L4A	680
VHLC22#-***N200L2A	680
VHLC22#-***N200L4A	680
VHLC28#-***N200L2A	681
VHLC28#-***N200L4A	681
VHLC28#-***N400L2A	681
VHLC28#-***N400L4A	681
VHLC32#-***N400L2A	682
VHLC32#-***N400L4A	682
VHLD18#-***N100L1A	679
VHLD18#-***N100L2A	679
VHLD18#-***N100L4A	679
VHLD22#-***N100L1A	680
VHLD22#-***N100L2A	680
VHLD22#-***N100L4A	680
VHLD22#-***N200L2A	680
VHLD22#-***N200L4A	680
VHLD28#-***N200L2A	681
VHLD28#-***N200L4A	681
VHLD28#-***N400L2A	681
VHLD28#-***N400L4A	681
VHLD32#-***N400L2A	682
VHLD32#-***N400L4A	682

High Precision Gearboxes for Servo Motors

Part Number	Corresponding Page
AF3FZ18#-***□100△	860,878
AF3FZ22#-***□100△	879
AF3FZ22#-***□200△	860,879
AF3FZ28#-***□200△	861,880
AF3FZ28#-***□400△	861,880
AF3FZ32#-***□1000△	863
AF3FZ32#-***□400△	862,881
AF3FZ32#-***□750△	862,863,882
AF3FZ40#-***□2000△	864,883
AF3FZ40#-***□750△	864,883
AF3SZ15-***□100△	856
AF3SZ20-***□100△	870
AF3SZ25-***□100△	871
AF3SZ25-***□200△	856,872
AF3SZ30-***□200△	857,873
AF3SZ30-***□400△	857,874
AF3SZ35-***□1000△	858
AF3SZ35-***□400△	858,875
AF3SZ35-***□750△	858,876
AF3SZ45-***□2000△	859,877
AF3SZ45-***□750△	859,877
AFCZ10#-***□100△	830
AFCZ12#-***□100△	831
AFCZ12#-***□200△	831
AFCZ12S-***□100△	820
AFCZ12S-***□200△	820
AFCZ15#-***□100△	832
AFCZ15#-***□200△	833
AFCZ15#-***□400△	833
AFCZ15S-***□100△	821
AFCZ15S-***□200△	821
AFCZ15S-***□400△	821
AFCZ18#-***□100△	834
AFCZ18#-***□200△	834
AFCZ18#-***□400△	834,835
AFCZ18#-***□750△	835
AFCZ18S-***□100△	822
AFCZ18S-***□200△	822
AFCZ18S-***□400△	822,823
AFCZ18S-***□750△	823,824
AFCZ22#-***□1000△	837
AFCZ22#-***□200△	836
AFCZ22#-***□400△	836
AFCZ22#-***□750△	836,837
AFCZ22S-***□1000△	825
AFCZ22S-***□200△	824
AFCZ22S-***□400△	824
AFCZ22S-***□750△	824,825
AFCZ28#-***□1000△	839
AFCZ28#-***□2000△	839
AFCZ28#-***□400△	838
AFCZ28#-***□750△	838
AFCZ28S-***□1000△	826
AFCZ28S-***□2000△	827
AFCZ28S-***□400△	826
AFCZ28S-***□750△	826
AFCZ32#-***□1000△	840,841
AFCZ32#-***□2000△	841
AFCZ32#-***□3000△	841
AFCZ32#-***□750△	840
AFCZ32S-***□1000△	829
AFCZ32S-***□2000△	829
AFCZ32S-***□3000△	829
AFCZ32S-***□750△	828
AG3FZ40-***□2000△	798
AG3FZ40-***□750△	798
AG3FZ50-***□2000△	799
AG3KZ18-***□100△	794
AG3KZ18-***□200△	794
AG3KZ22-***□100△	795
AG3KZ22-***□200△	795
AG3KZ22-***□400△	795
AG3KZ28-***□200△	796
AG3KZ28-***□400△	796
AG3KZ28-***□750△	796
AG3KZ32-***□2000△	797
AG3KZ32-***□400△	797
AG3KZ32-***□750△	797
AG3LZ18-***□100△	787
AG3LZ18-***□200△	787
AG3LZ22-***□100△	788
AG3LZ22-***□200△	788
AG3LZ22-***□400△	788
AG3LZ28-***□200△	789
AG3LZ28-***□400△	789
AG3LZ28-***□750△	789
AG3LZ32-***□2000△	790
AG3LZ32-***□400△	790
AG3LZ32-***□750△	790
AG3LZ40-***□2000△	791
AG3LZ40-***□750△	791
AG3LZ50-***□2000△	792
AGALZ50-***□2000△	793
AH2LZ22#-***□100△	806
AH2LZ22#-***□200△	806
AH2LZ28#-***□200△	807
AH2LZ28#-***□400△	807
AH2LZ32#-***□400△	808
AH2LZ32#-***□750△	808
AH2LZ40#-***□2000△	809
AH2LZ40#-***□750△	809
AH2LZ50#-***□2000△	810
APGZ12J-***□100△N	763,765
APGZ12J-***□100△W	763,765
APGZ12J-***□150△N	763,765
APGZ12J-***□150△W	763,765
APGZ12J-***□200△N	763,765
APGZ12J-***□200△W	763,765
APGZ12J-***□400△N	763
APGZ12J-***□400△W	763
APGZ12K-***□100△N	762,764
APGZ12K-***□100△W	762,764

* A shaft arrangement will be indicated as # and a reduction ratio will be indicated as *** in the nomenclature. In addition, a backlash will be indicated as □, and a flange type will be indicated as △.

APGZ12K-***□150△N	762,764
APGZ12K-***□150△W	762,764
APGZ12K-***□200△N	762,764
APGZ12K-***□200△W	762,764
APGZ12K-***□400△N	762
APGZ12K-***□400△W	762
APGZ18J-***□100△N	768
APGZ18J-***□100△W	768
APGZ18J-***□150△N	768
APGZ18J-***□150△W	768
APGZ18J-***□200△N	768
APGZ18J-***□200△W	768
APGZ18J-***□400△N	768,769
APGZ18J-***□400△W	768,769
APGZ18J-***□600△N	769
APGZ18J-***□600△W	769
APGZ18J-***□750△N	768,769
APGZ18J-***□750△W	768,769
APGZ18K-***□100△N	766
APGZ18K-***□100△W	766
APGZ18K-***□150△N	766
APGZ18K-***□150△W	766
APGZ18K-***□200△N	766
APGZ18K-***□200△W	766
APGZ18K-***□400△N	766,767
APGZ18K-***□400△W	766,767
APGZ18K-***□600△N	767
APGZ18K-***□600△W	767
APGZ18K-***□750△N	767,768
APGZ18K-***□750△W	767,768
APGZ22J-***□1000△N	774
APGZ22J-***□1000△W	774
APGZ22J-***□1500△N	774
APGZ22J-***□1500△W	774
APGZ22J-***□200△N	771,772
APGZ22J-***□200△W	771,772
APGZ22J-***□2000△N	774
APGZ22J-***□2000△W	774
APGZ22J-***□400△N	771,772
APGZ22J-***□400△W	771,772
APGZ22J-***□600△N	771
APGZ22J-***□600△W	771
APGZ22J-***□750△N	772
APGZ22J-***□750△W	772
APGZ22K-***□1000△N	773
APGZ22K-***□1000△W	773
APGZ22K-***□1500△N	773
APGZ22K-***□1500△W	773
APGZ22K-***□200△N	770
APGZ22K-***□200△W	770

APGZ22K-***□2000△N	773
APGZ22K-***□2000△W	773
APGZ22K-***□400△N	770
APGZ22K-***□400△W	770
APGZ22K-***□600△N	770
APGZ22K-***□600△W	770
APGZ22K-***□750△N	770,771
APGZ22K-***□750△W	770,771
APGZ28J-***□1000△N	778,780
APGZ28J-***□1000△W	778,780
APGZ28J-***□1500△N	778,780
APGZ28J-***□1500△W	778,780
APGZ28J-***□2000△N	778,780
APGZ28J-***□2000△W	778,780
APGZ28J-***□3000△N	778,780
APGZ28J-***□3000△W	778,780
APGZ28J-***□400△N	777
APGZ28J-***□400△W	777
APGZ28J-***□600△N	777
APGZ28J-***□600△W	777
APGZ28J-***□750△N	777
APGZ28J-***□750△W	777
APGZ28K-***□1000△N	776,779
APGZ28K-***□1000△W	776,779
APGZ28K-***□1500△N	776,779
APGZ28K-***□1500△W	776,779
APGZ28K-***□2000△N	776,779
APGZ28K-***□2000△W	776,779
APGZ28K-***□3000△N	776,779
APGZ28K-***□3000△W	776,779
APGZ28K-***□400△N	775
APGZ28K-***□400△W	775
APGZ28K-***□600△N	775
APGZ28K-***□600△W	775
APGZ28K-***□750△N	775
APGZ28K-***□750△W	775

Bevel Gearboxes

Part Number	Corresponding Page
KB-101	961
KB-102	961
KB-151	961
KB-152	961
KB-201	961
KB-202	961
KC-101	962
KC-102	962
KC-151	962
KC-152	962
KC-201	962
KC-202	962

KNB-191	764,765
KNB-192	764,765
KNB-251	764,765
KNB-252	764,765
KNB-321	764,765
KNB-322	764,765
KNB-401	764,765
KNB-402	764,765
KNC-191	766,767
KNC-192	766,767
KNC-251	766,767
KNC-252	766,767
KNC-321	766,767
KNC-322	766,767
KNC-401	766,767
KNC-402	766,767

MEMO

* The specifications of the products in this catalog are subject to change for improvement or other purposes without notice. So, please contact us before designing your equipment to confirm the specifications of our product.
* If the end-user of the product is a military organization, the application thereof is the manufacture of weapons etc., or you plan to export the product to a country subject to export controls specified in the "Foreign Exchange and Foreign Trade Act," perform in-depth investigation and follow necessary export procedures prior to export.

NISSEI CORPORATION

https://www.nissei-gtr.global/en/

Sales, Overseas Section

TEL : +81-566-92-5312　FAX : +81-566-92-7002

E-mail:oversea@nissei-gtr.co.jp

2026.7.0/0-8